Example 9.1

A NMOS differential pair has $V_{DD} = V_{SS} = 1.5V$, $k_n'W/L = 4\ mA/V^2$, $V_t = 0.5V$, $I = 0.4\ mA$, $R_D = 2.5\ k\Omega$. Neglect channel width modulation and compute V_{CMmax} and V_{CMmin} if the minimum required voltage for I is 0.4V. $= V_{CS}$

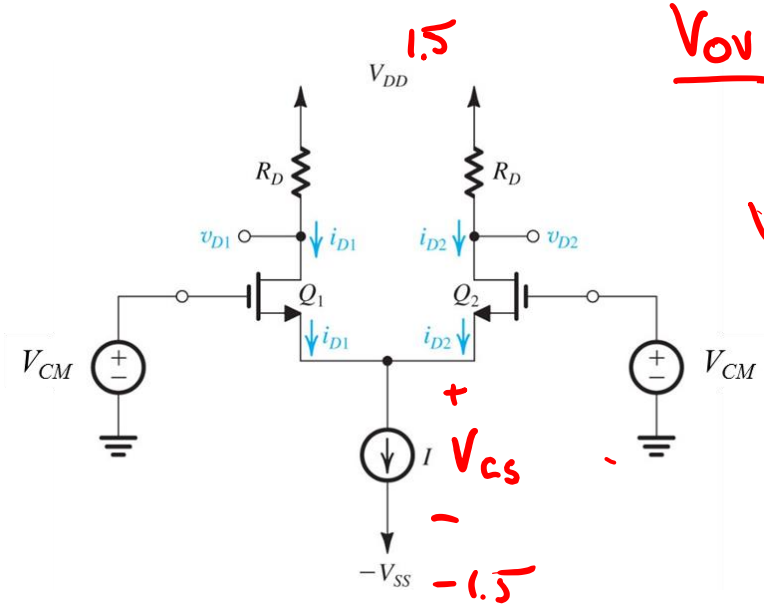

$$V_{OV} = \sqrt{\frac{I}{k_n' \frac{W}{L}}} = \sqrt{\frac{0.4mA}{4\ mA/V^2}} = \sqrt{0.1} = 0.316V$$

$$V_{CMmax} = V_{DD} - \frac{I}{2}R + V_t$$

$$= 1.5V - \underbrace{\frac{0.4mA}{2} 2.5k}_{0.5} + 0.5V$$

$$= 1.5V$$

$$V_{CMmin} = -V_{SS} + V_{CS} + V_{OV} + V_t$$

$$= -1.5V + 0.4V + 0.316 + 0.5V$$

$$= -0.284V$$

Example 9.1
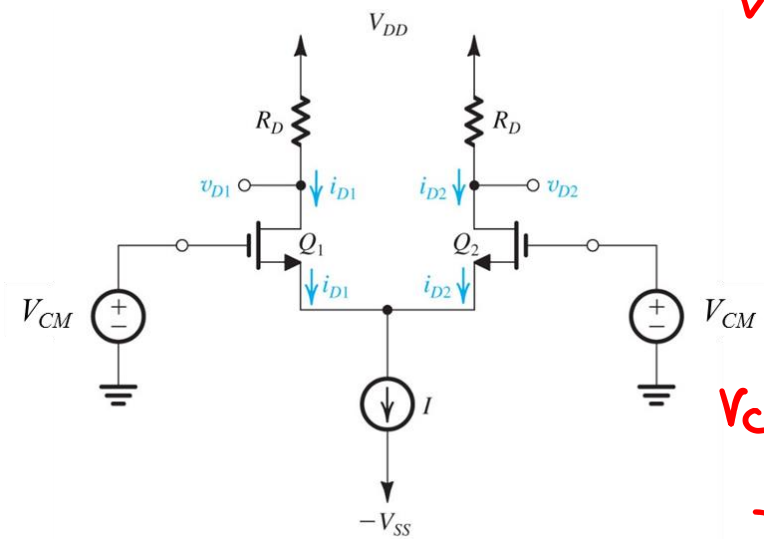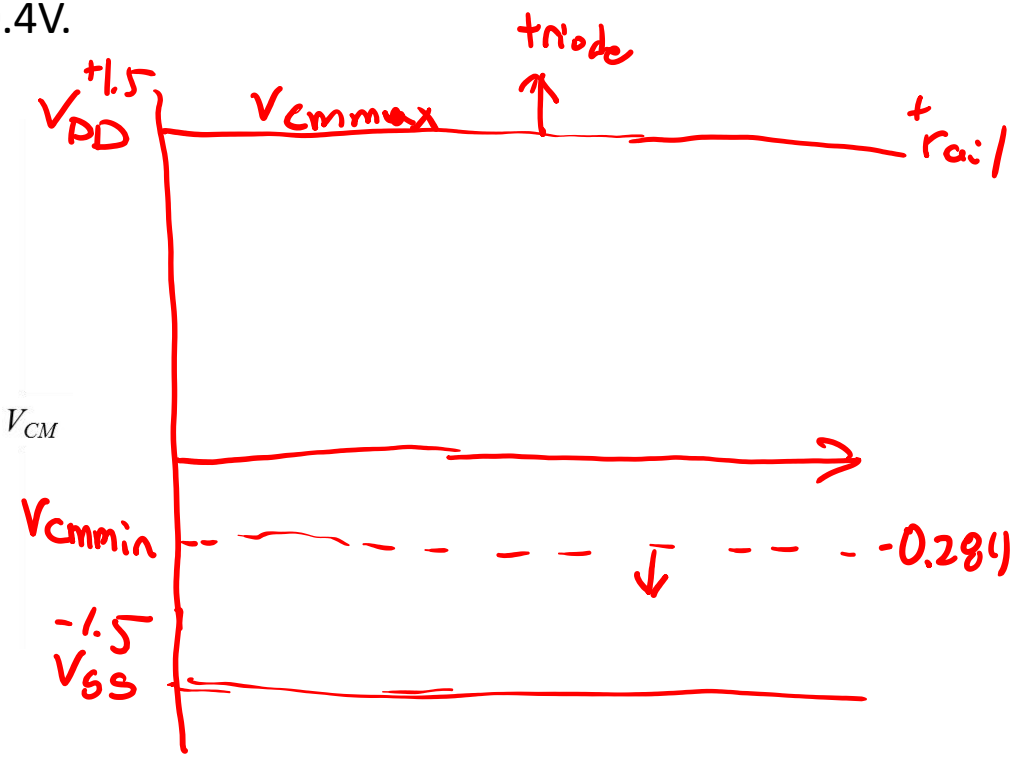
A NMOS differential pair has $V_{DD} = V_{SS} = 1.5V$, $k_n'W/L = 4\ mA/V^2$, $V_t = 0.5V$, $I = 0.4\ mA$, $R_D = 2.5\ k\Omega$. Neglect channel width modulation and compute V_{CMmax} and V_{CMmin} if the minimum required voltage for I is 0.4V.