Unit #6
Chapter #9.1: The MOS Differential Pair (2)
Lecture 33

from **Microelectronic Circuits** Text
by Sedra and Smith
Oxford Publishing

9.1.3 Operation with differential input – Large Signal

- **In general**

$$i_{D1} = \frac{1}{2} k_n' \frac{W}{L} \left(v_{GS1} - V_t\right)^2$$

$$i_{D2} = \frac{1}{2} k_n' \frac{W}{L} \left(v_{GS2} - V_t\right)^2$$

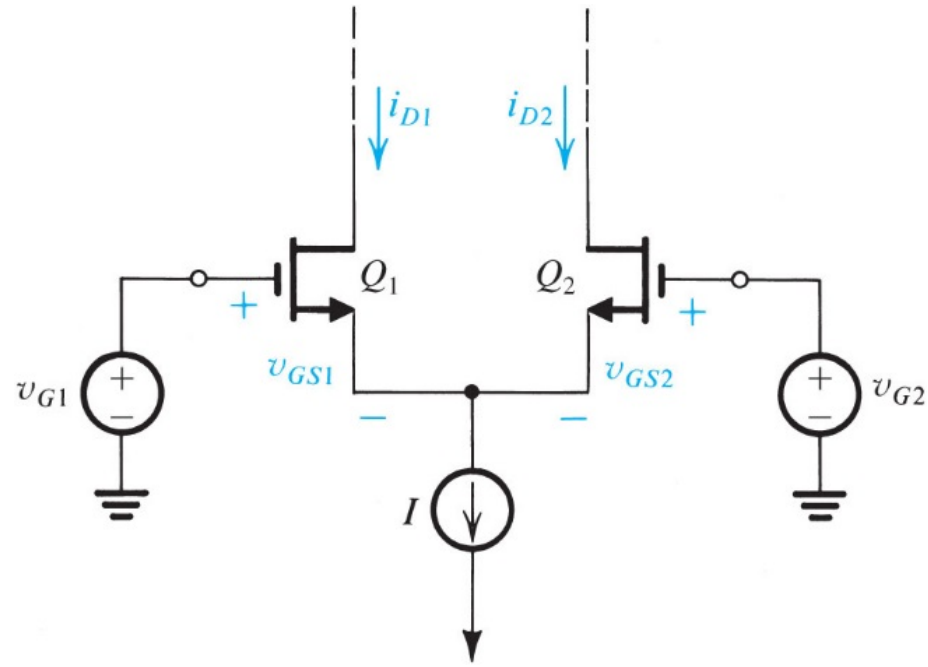

- **So taking the square root of both sides**

$$\sqrt{i_{D1}} = \sqrt{\frac{1}{2} k_n' \frac{W}{L}} \left(v_{GS1} - V_t\right) \qquad \sqrt{i_{D2}} = \sqrt{\frac{1}{2} k_n' \frac{W}{L}} \left(v_{GS2} - V_t\right)$$

$I_{D1} + I_{D2} = I$

9.1.3 Operation with differential input – Large Signal

- **By definition the differential input is**

$$v_{id} = v_{GS1} - v_{GS2}$$

- **So we have**

$$\sqrt{i_{D1}} - \sqrt{i_{D2}} = \sqrt{\frac{1}{2}k_n'\frac{W}{L}}v_{id} \qquad \textbf{(1)}$$

- **And still have**

$$i_{D1} + i_{D2} = I$$

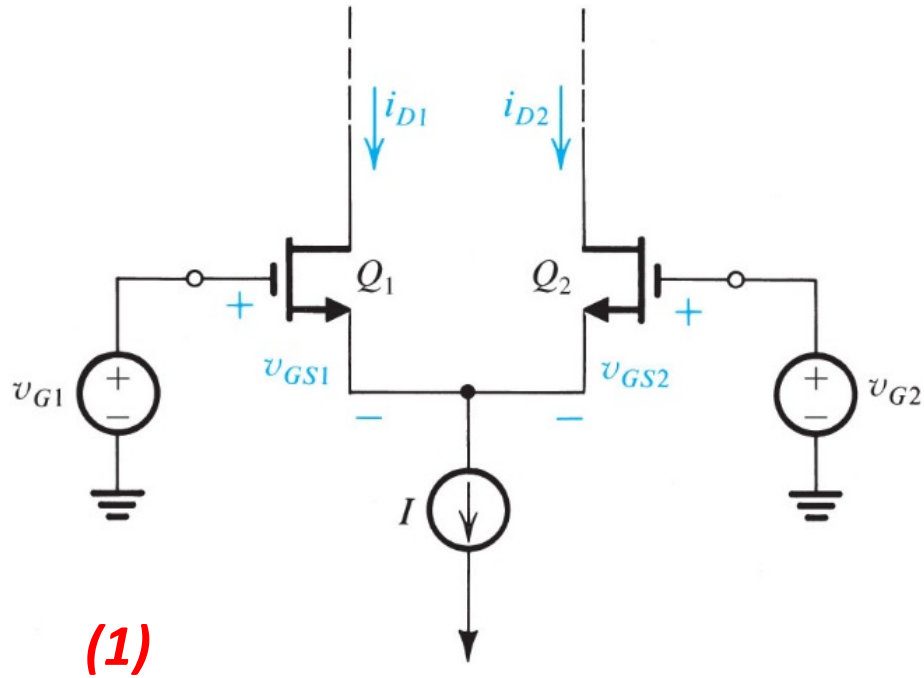

$$\sqrt{i_{D1}} - \sqrt{i_{D2}}$$

$$\sqrt{\frac{1}{2}k_n'\frac{W}{L}}(v_{GS1} - \cancel{V_t}) - \sqrt{\frac{1}{2}k_n'\frac{W}{L}}(v_{GS2} - \cancel{V_t})$$

9.1.3 Operation with differential input – Large Signal

$$\sqrt{i_{D1}} - \sqrt{i_{D2}} = \sqrt{\frac{1}{2}k_n'\frac{W}{L}v_{id}} \quad (1)$$

Now squaring (1) on both sides and substituting $i_{D1} + i_{D2} = I$

$$\sqrt{i_{D1}} - \sqrt{i_{D2}} = \sqrt{\frac{1}{2}k_n'\frac{W}{L}v_{id}}$$

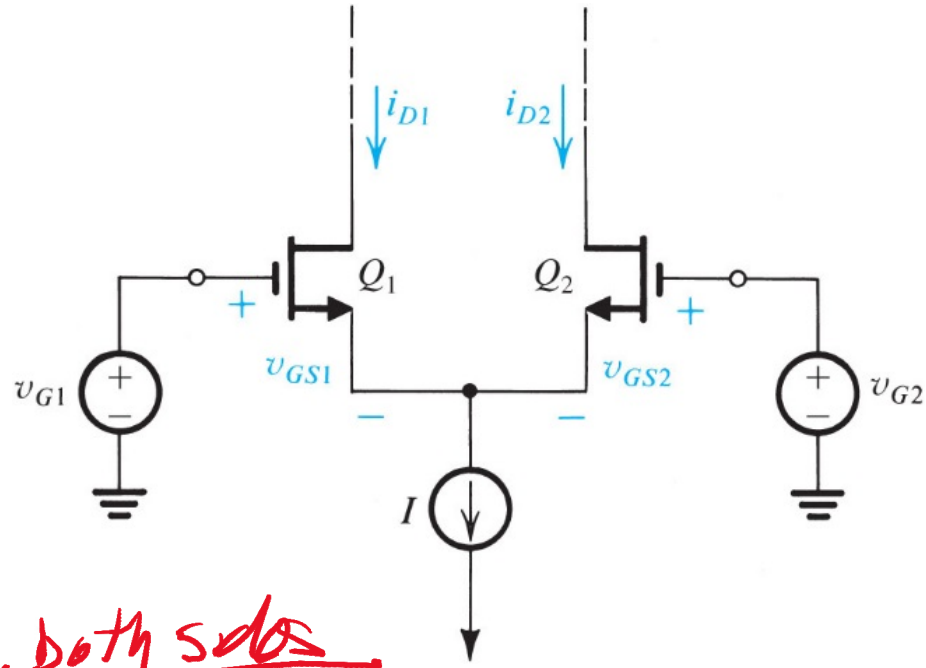

$$i_{D1} - 2\sqrt{i_{D1}i_{D2}} + i_{D2} = \frac{k_n}{2}V_{id}^2$$

$$\sqrt{i_{D1}i_{D2}} = \frac{I}{2} - \frac{k_n}{2}\frac{V_{id}^2}{2}$$ sq. both sides

$$i_{D1}i_{D2} = \left(\frac{I}{2} - \frac{k_n}{2}\frac{V_{id}^2}{2}\right)^2 \quad (2)$$

9.1.3 Operation with differential input – Large Signal

$i_{D1} i_{D2} = \left(\frac{I}{2} - \frac{K_n}{2}\frac{V_{id}^2}{2}\right)^2$ (2)

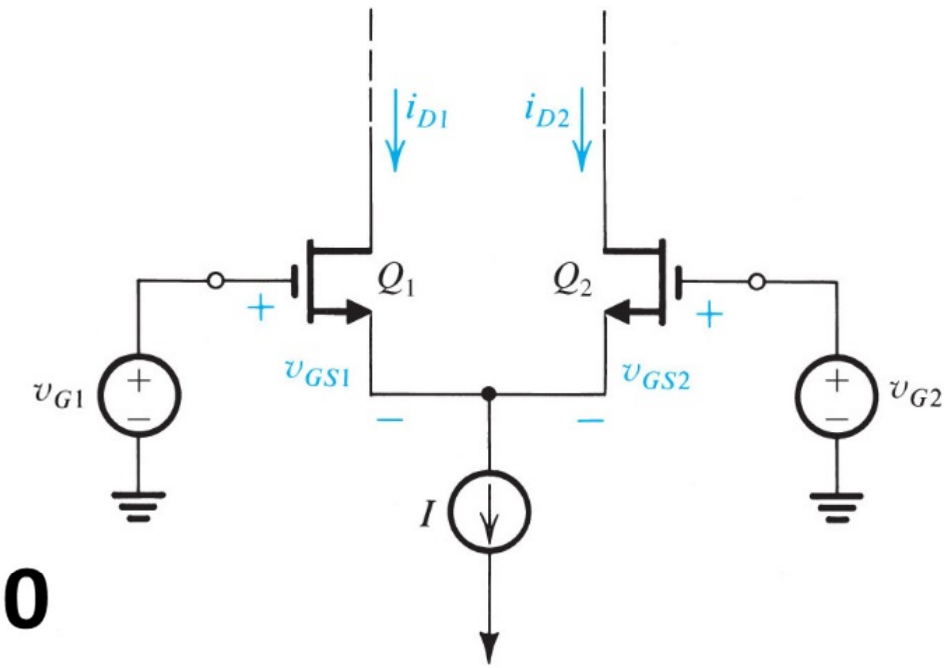

- Substitute for i_{D2} with
- $i_{D2} = I - I_{D1}$
  and derive using *(2)*
- $I_{D1}^2 - I_{D1} I + \left\{\frac{I}{2} - \frac{KnV_{id}^2}{2 * 2}\right\}^2 = 0$
- ***Quadratic Equation:***

Solve for I_{D1}

$$i_{D1} = \frac{I}{2} + \sqrt{k_n' \frac{W}{L} I}\,\frac{v_{id}}{2}\sqrt{1 - \frac{\left(\frac{v_{id}}{2}\right)^2}{I \Big/ k_n' \frac{W}{L}}}$$

Why "+"

9.1.3 Operation with differential input – Large Signal

- **The corresponding equation for i_{D2} is**

$$i_{D2} = \frac{I}{2} - \sqrt{k_n' \frac{W}{L} I}\,\frac{v_{id}}{2}\sqrt{1 - \frac{\left(\frac{v_{id}}{2}\right)^2}{I \Big/ k_n' \frac{W}{L}}}$$

V_{id} i_{D2}

- **Now how can we clean these large signal equations up a bit?**

9.1.3 Operation with differential input – Large Signal

- **If v_{id} = 0 V we know**

$$i_{D1} = i_{D2} = \frac{I}{2}$$

$$v_{GS1} - V_t = v_{GS2} - V_t = V_{OV}$$

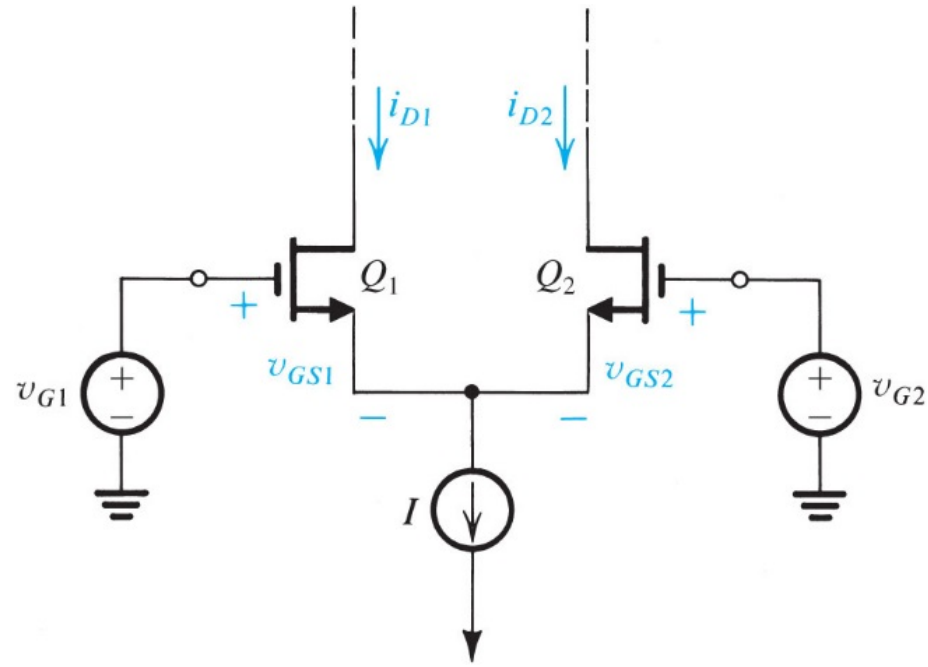

- **So** $\frac{I}{2} = \frac{1}{2} k_n' \frac{W}{L} V_{OV}^{\ 2}$

9.1.3 Operation with differential input – Large Signal

- **Putting** $\frac{I}{2} = \frac{1}{2} k_n' \frac{W}{L} V_{OV}^2$ **into**

$$i_{D1} = \frac{I}{2} + \sqrt{k_n' \frac{W}{L} I} \frac{v_{id}}{2} \sqrt{1 - \frac{\left(\frac{v_{id}}{2}\right)^2}{I / k_n' \frac{W}{L}}}$$

$$V_{OV}^2 = \frac{I}{K_n}$$

$$V_{OV} = \sqrt{I} / \sqrt{K_n}$$

$$\sqrt{K_n} = \sqrt{I} / V_{OV} * \sqrt{I/I}$$

$$\sqrt{K_n I} = I / V_{OV}$$

$$i_{D1} = \frac{I}{2} + \frac{I}{V_{OV}} \frac{v_{id}}{2} \sqrt{1 - \left[\frac{\left(\frac{v_{id}}{2}\right)}{V_{OV}}\right]^2}$$

And in the same way

$$i_{D2} = \frac{I}{2} - \frac{I}{V_{OV}} \frac{v_{id}}{2} \sqrt{1 - \left[\frac{\left(\frac{v_{id}}{2}\right)}{V_{OV}}\right]^2}$$

9.1.3 Normalized Drain Current Plots

$$i_{D1} = \frac{I}{2} + \frac{I}{V_{OV}}\frac{v_{id}}{2}\sqrt{1-\left[\frac{\left(\frac{v_{id}}{2}\right)}{V_{OV}}\right]^2} \qquad i_{D2} = \frac{I}{2} - \frac{I}{V_{OV}}\frac{v_{id}}{2}\sqrt{1-\left[\frac{\left(\frac{v_{id}}{2}\right)}{V_{OV}}\right]^2}$$

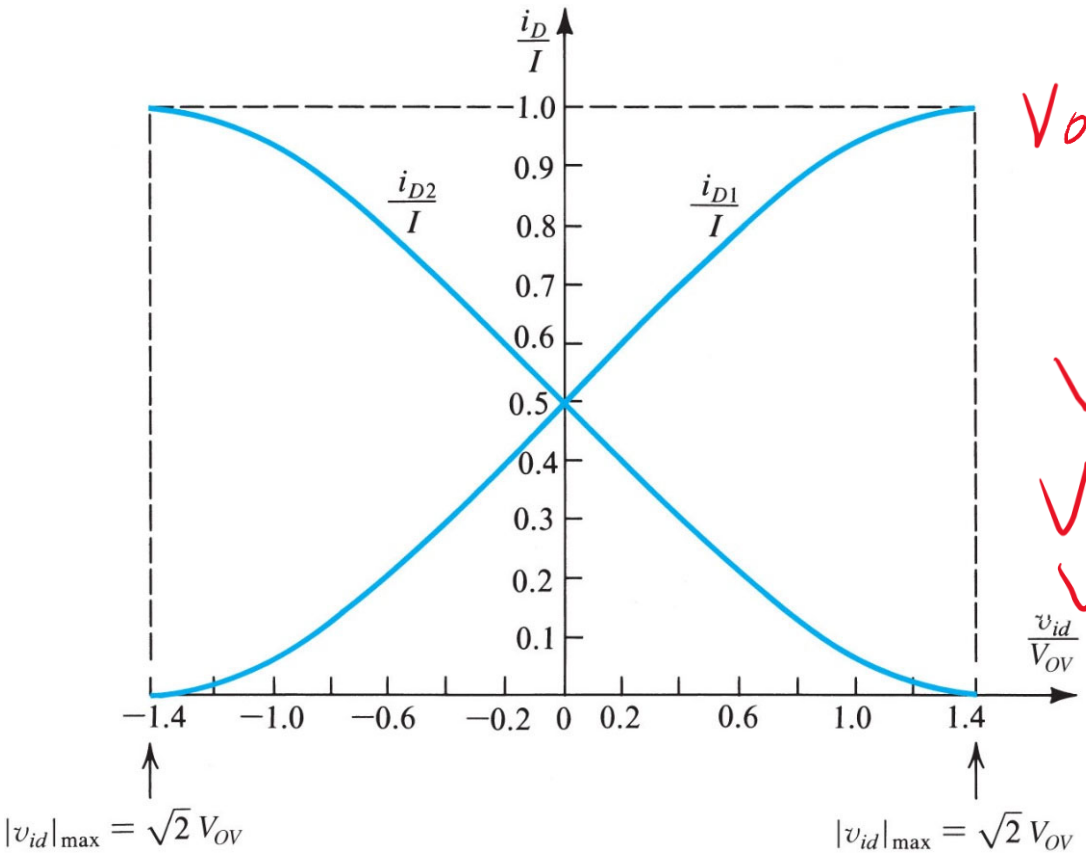

What defines $|v_{id}|_{max}$?

① $I_{D1} = I$ ② $V_{GS2} = V_T$ (near CUTOFF)

$V_{OV} = (V_{GS1} - V_T) = \sqrt{\frac{2 I_{D1}}{K_n}}$ $I_{D1} = I$

$= \sqrt{\frac{2 I}{K_n}} \Rightarrow V_{OV}^2$

$V_{GS1} - V_T = \sqrt{2}\, V_{OV}$

$V_{IDmax} = V_{GS1} - V_{GS2}$

$V_{IDmax} = \sqrt{2}\, V_{OV} + \cancel{V_T} - \cancel{V_T}$

$$v_{id\,\max} = \pm\sqrt{2}V_{OV}$$

9.1.3 When v_{id} is small $V_{id}/2 << V_{OV}$

$$i_{D1} = \frac{I}{2} + \frac{I}{V_{OV}}\frac{v_{id}}{2}\sqrt{1-\left[\frac{\left(\frac{v_{id}}{2}\right)}{V_{OV}}\right]^2}$$

$$\approx \frac{I}{2} + \boxed{\frac{I}{V_{OV}}\frac{v_{id}}{2}}$$

$$i_{D2} \approx \frac{I}{2} - \boxed{\frac{I}{V_{OV}}\frac{v_{id}}{2}}$$

The small signal current i_d

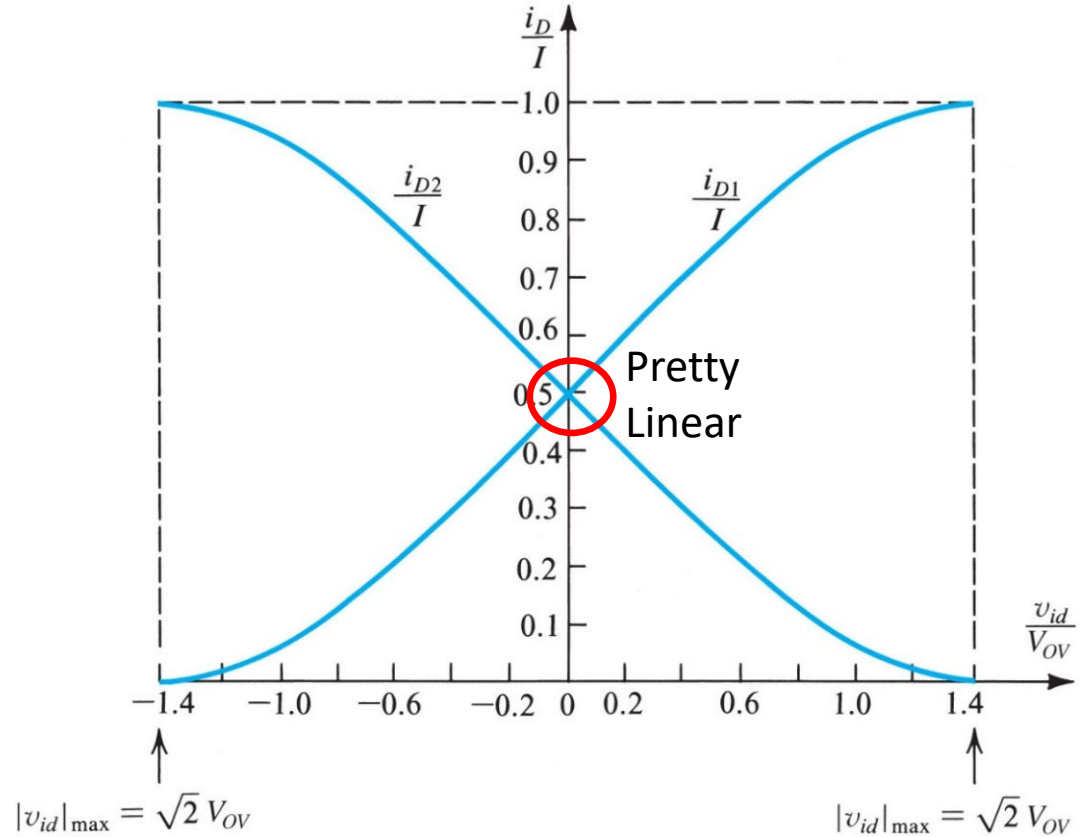

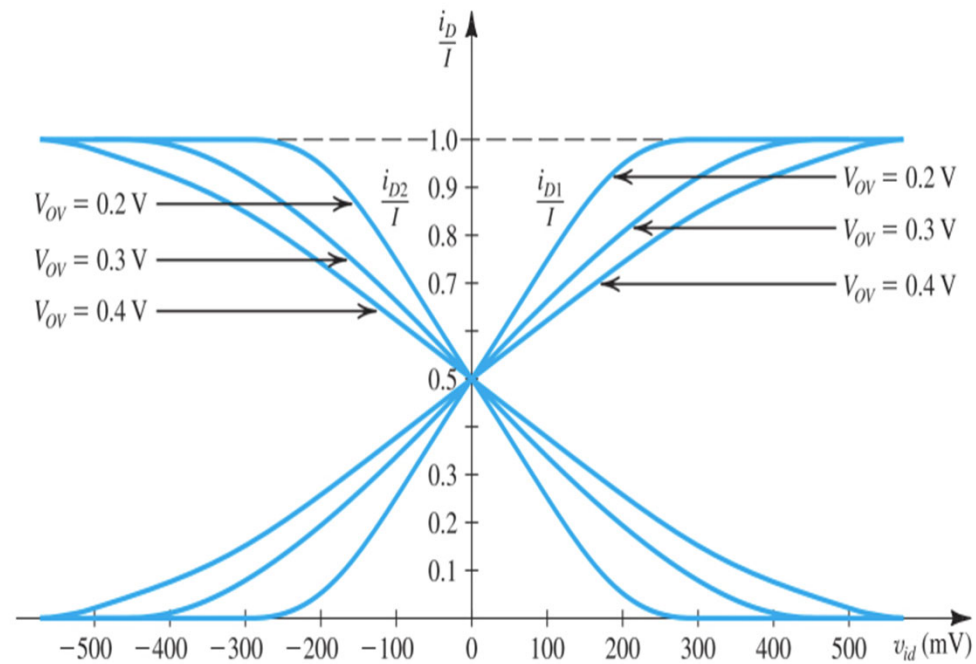

9.1.4 Small Signal Operation – Differential Gain

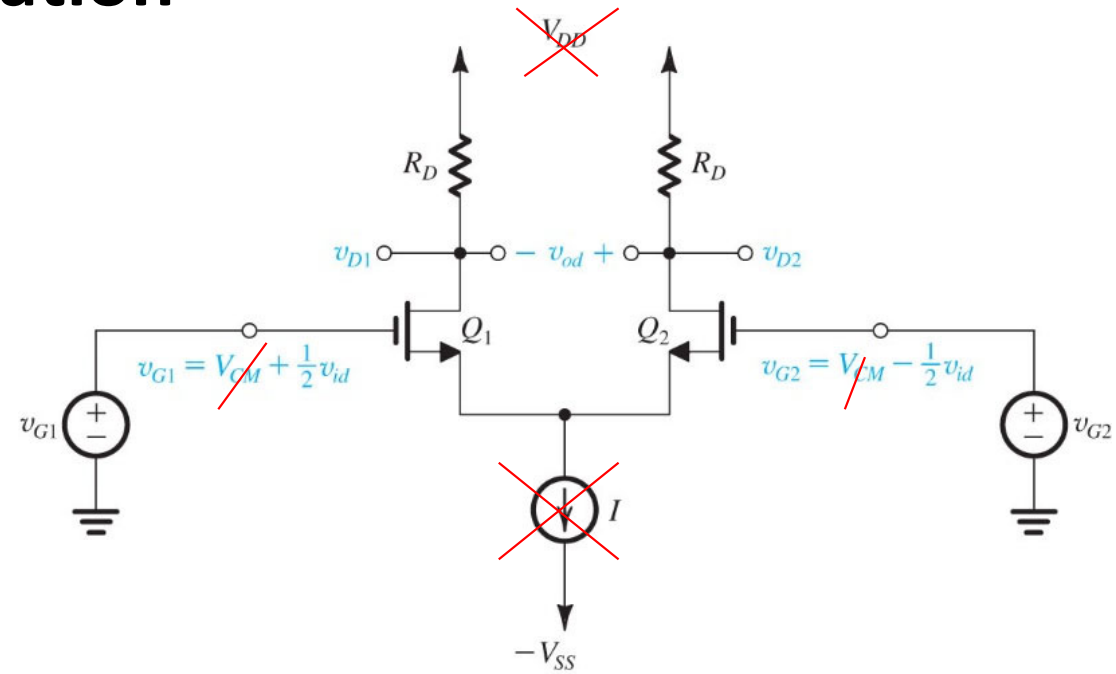

- **Once again by definition the differential input is**

$$v_{id} = v_{G1} - v_{G2}$$

- **And by definition the common mode input is**

$$V_{CM} = \frac{v_{G1} + v_{G2}}{2}$$

- **So**

$$v_{G1} = V_{CM} + \frac{1}{2}v_{id}$$

$$v_{G2} = V_{CM} - \frac{1}{2}v_{id}$$

9.1.4 Small Signal Model

- **Using the small signal "T" model (neglecting r_o for now) the large signal V_{CM} is removed and the equivalent circuit looks like**

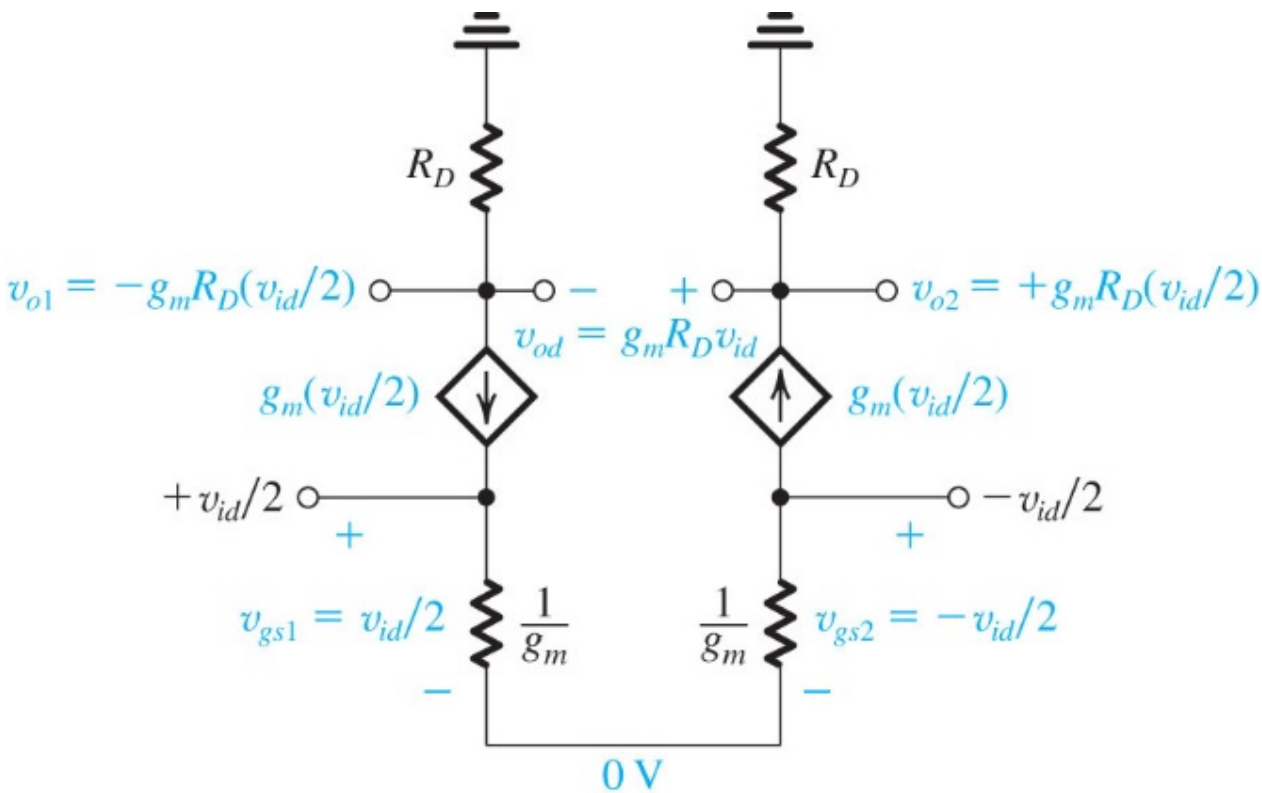

Why do we say the source node is 0V?

9.1.4 Small Signal Model

- **Using the small signal "T" model (neglecting r_o for now) the large signal V_{CM} is removed and the equivalent circuit looks like**

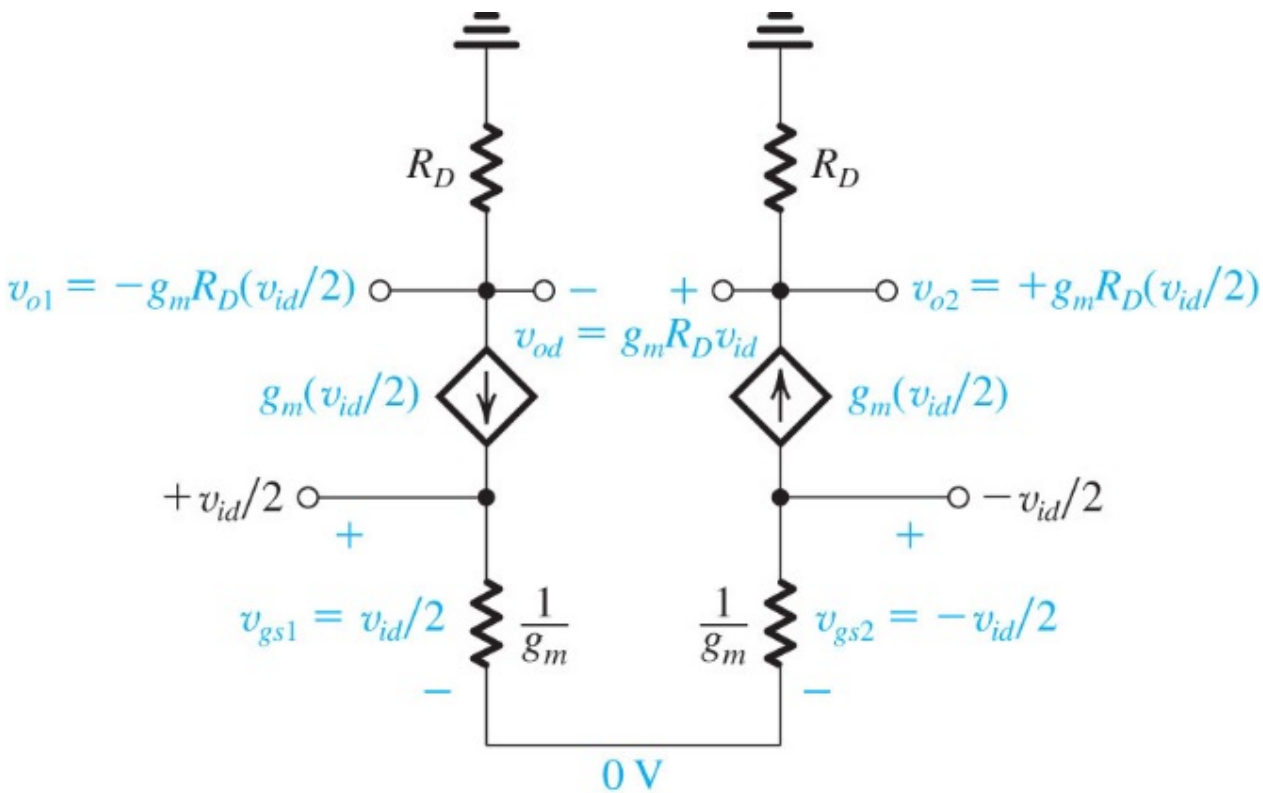

In the small signal the source node is called a "virtual ground" as long as the g_m's for both transistors are equal

What is the g_m?

9.1.4 Small signal transconductance

- **Recall in the first part of this lecture, if v_{id} is small ($v_{id} << 2V_{ov}$) then**

$$i_{D1} \approx \frac{I}{2} + \frac{I}{V_{OV}} \frac{v_{id}}{2} = \frac{I}{2} + i_{d1}$$

Small signal current

DC operating point current

- **So the small signal current is**

$$i_{d1} = \frac{I}{V_{OV}} \frac{v_{id}}{2} = g_m \frac{v_{id}}{2}$$

where

$$g_m = \frac{I}{V_{OV}}$$

And by the same argument

$$i_{d2} = \frac{I}{V_{OV}} \frac{v_{id}}{2} = g_m \frac{v_{id}}{2}$$

... the same g_m

9.1.4 Small signal transconductance

- **Different ways of expressing g_m**

$$g_m = \frac{I}{V_{OV}} = k_n' \frac{W}{L} V_{OV} = \sqrt{k_n' \frac{W}{L} I}$$

Recall that I is the tail current source

Note: @Vcm each MOSFET as I/2 current: $\frac{I}{2} = \frac{K_n}{2} V_{OV}^2$ ->
(1) $I = K_n V_{OV}^2$ -> (2) $V_{OV} = \sqrt{I} / \sqrt{K_n}$

9.1.4 Differential Gain (Single Ended Output)

- **To get the small signal differential gain with single ended output**

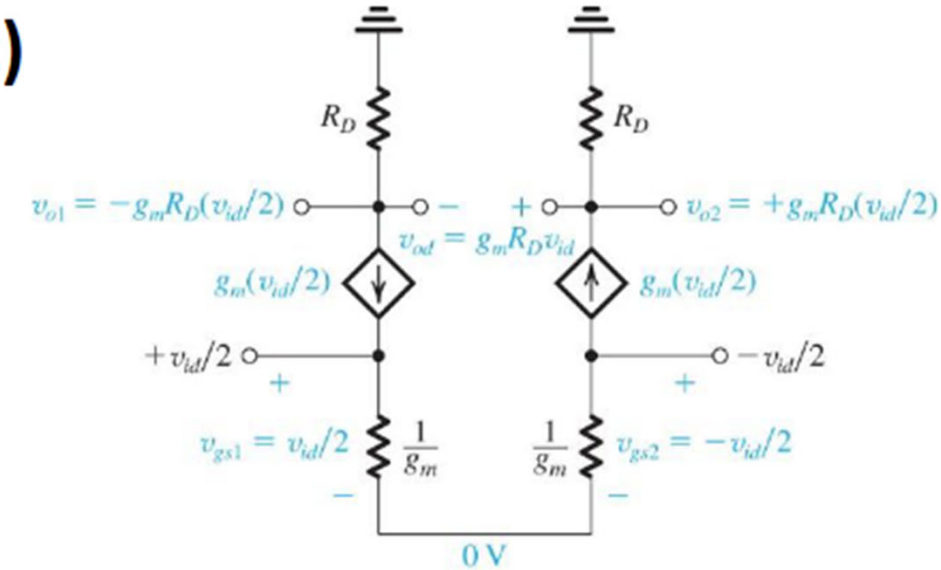

$$A_{ds.e.} = \frac{v_{o2}}{v_{id}}$$

where

$$v_{o2} = g_m R_D \left(\frac{v_{id}}{2}\right)$$

So

$$A_{ds.e.} = \frac{g_m R_D}{2}$$

OR

$$A_{ds.e.} = \frac{g_m (R_D || r_o)}{2}$$

$$when \quad r_o = \frac{V_A}{I/2} \text{ is included}$$

9.1.4 Differential Gain

- **To get the small signal differential gain**

$$A_d = \frac{v_{o2} - v_{o1}}{v_{id}}$$

where

$$v_{o1} = -g_m R_D \left(\frac{v_{id}}{2} \right)$$

and

$$v_{o2} = g_m R_D \left(\frac{v_{id}}{2} \right)$$

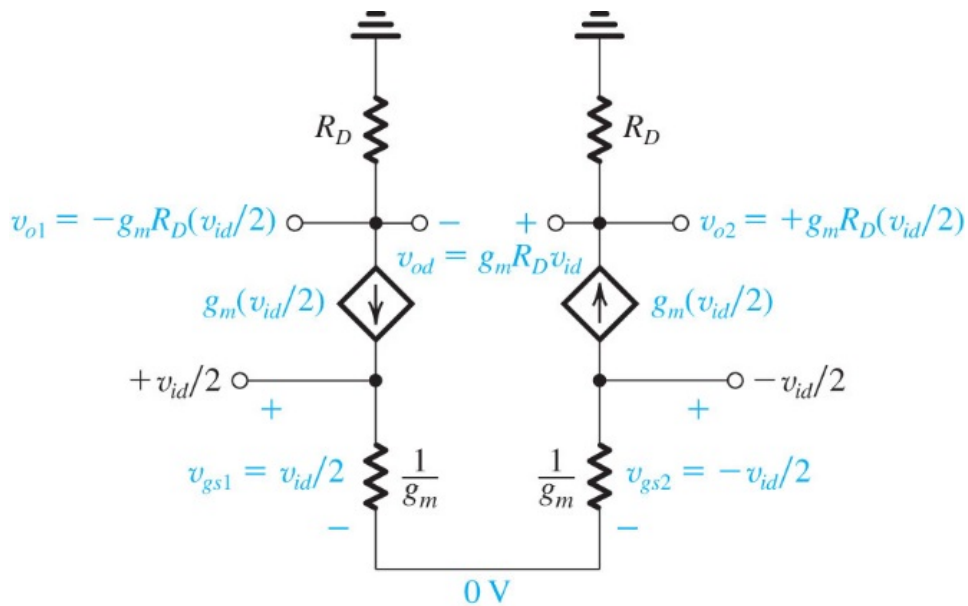

So $v_{o2} - v_{o1} = g_m R_D v_{id}$

and

$$A_d = g_m R_D$$

OR $$A_d = g_m (R_D \parallel r_o)$$

when $r_o = \dfrac{V_A}{I/2}$ is included

9.1.4 Differential Gain with Current Source Loads

- **What is the differential gain when passive loads, R_D, are replaced by two independent p-channel current sources?**

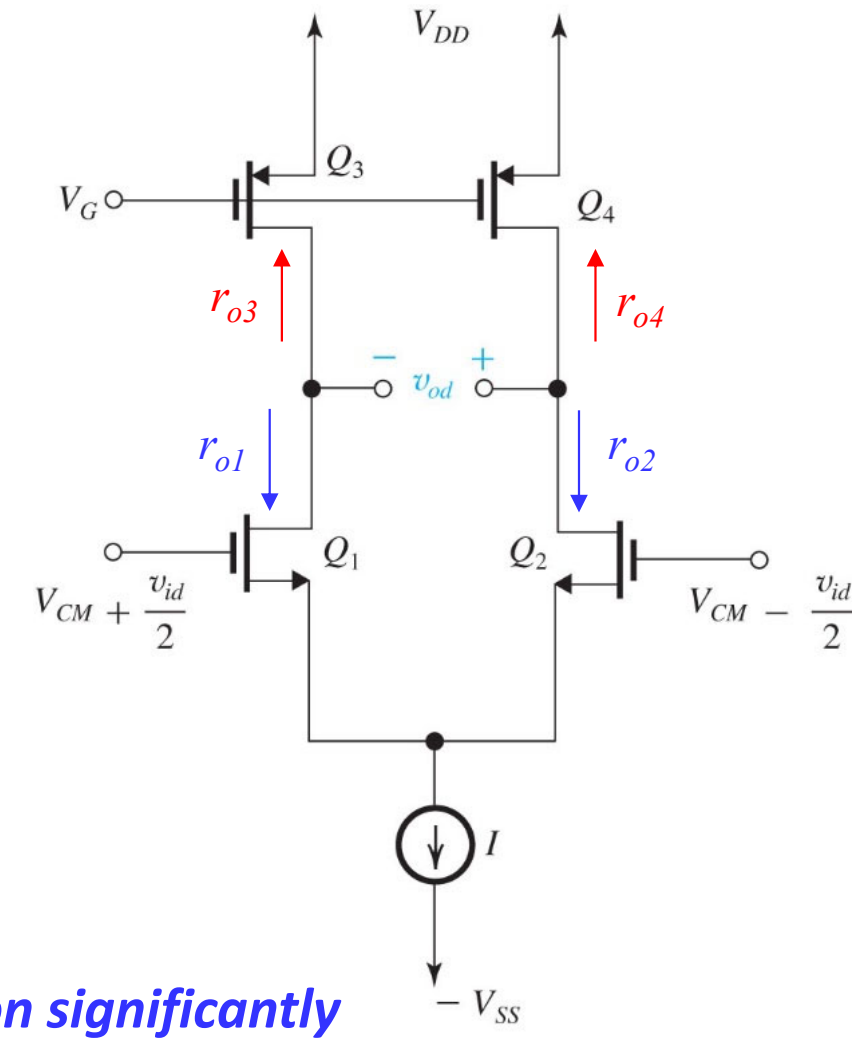

$$A_d = g_m(r_{o1} \parallel r_{o3})$$

since $r_{o1} = r_{o2}$ and $r_{o3} = r_{o4}$

Note: since r_{o3} >> R_D, this configuration significantly increases the differential gain .. which is a good thing