Unit #6
Chapter #9.3: Common Mode Rejection
Lecture 34

from **Microelectronic Circuits** Text
by Sedra and Smith
Oxford Publishing

9.3.1 Common Mode Gain

- **When the small signal is the same on both inputs there can be a small gain**

Differential output

$$A_{cm} = \frac{v_{o2} - v_{o1}}{v_{icm}} = \frac{v_{od}}{v_{icm}}$$

Single ended output

$$A_{cm,s.e} = \frac{v_{o1}}{v_{icm}} \quad OR \quad \frac{v_{o2}}{v_{icm}}$$

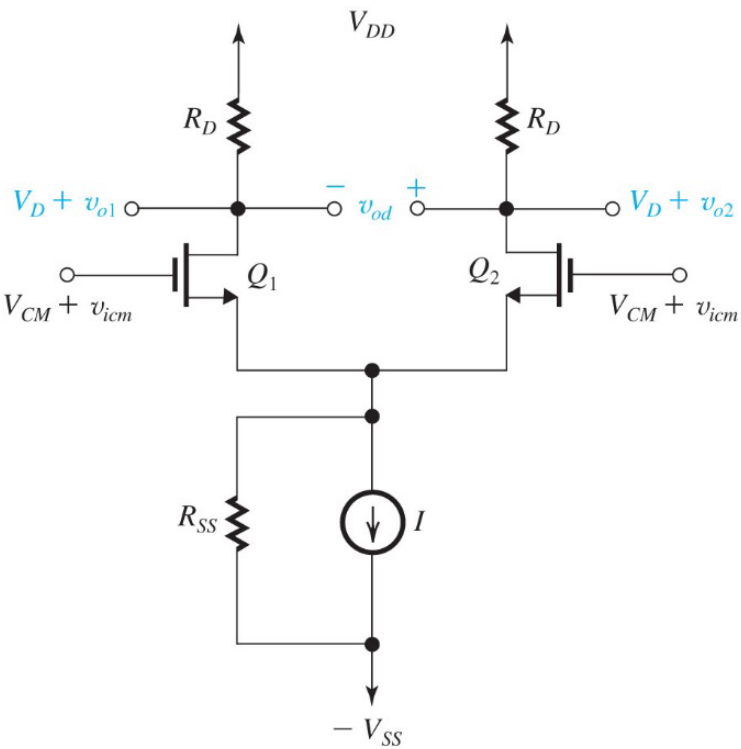

9.3.1 Common Mode Gain

- **Note that the we are now showing a resistance in parallel with the tail current source**

  WHY?

- **Because, in fact, it is always there since we can never make a perfectly ideal current source**

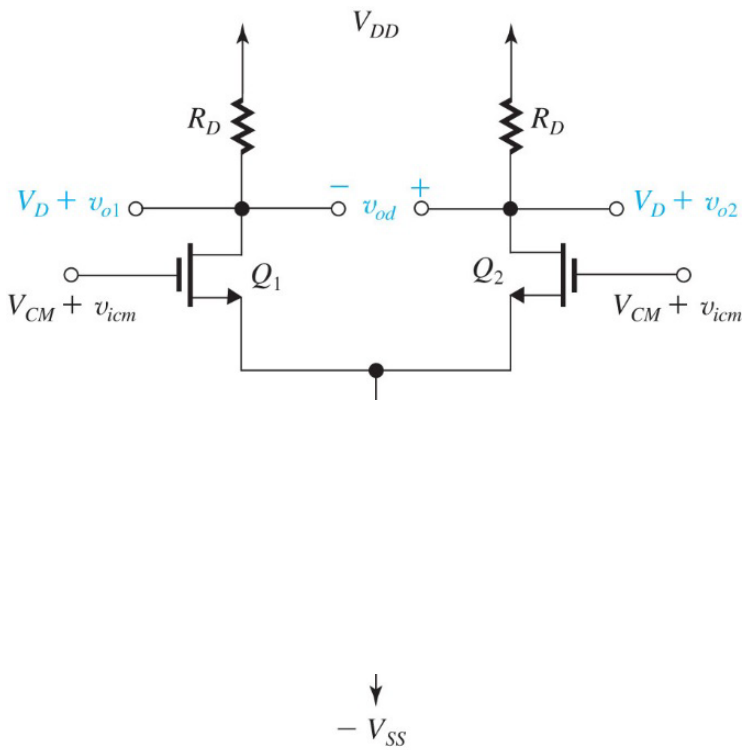

Consider the case were I is created with one biased n-channel transistor…what is R_{SS} in this case?

9.3.1 The Small Signal Model

- **Here is what the full small signal (T) model looks like, neglecting r_o, with a small common mode input signal**

- **See that we remove the large signal V_{CM} and ideal current source, I**

- **But the tail source resistance, R_{SS}, has to stay!**

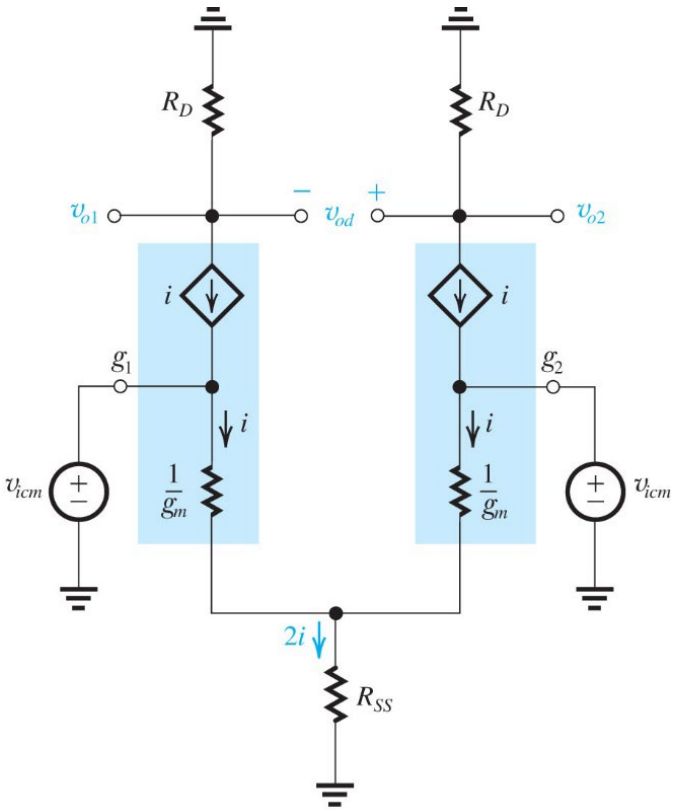

9.3.1 **CM Half Circuits**

- **To make the circuit look less complicated, we note that all loop currents and node voltages will be the same if we bisect the circuit at the source creating 2 half circuits**

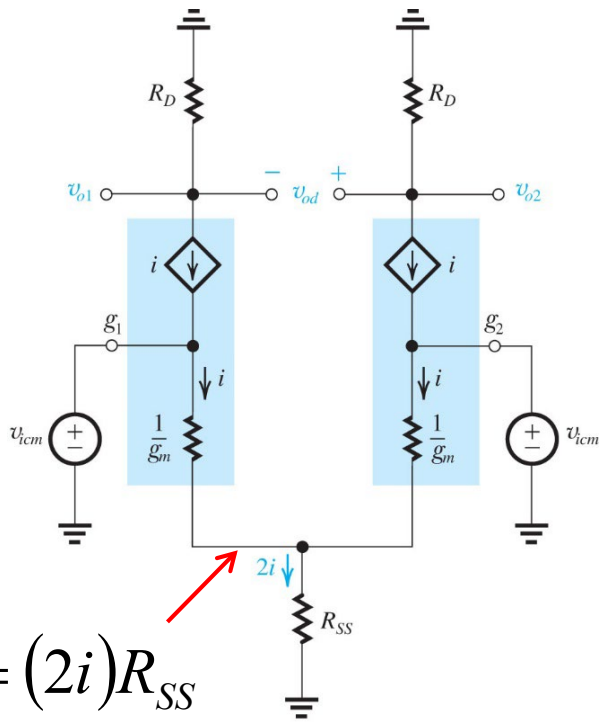

$$v_s = (2i)R_{SS}$$

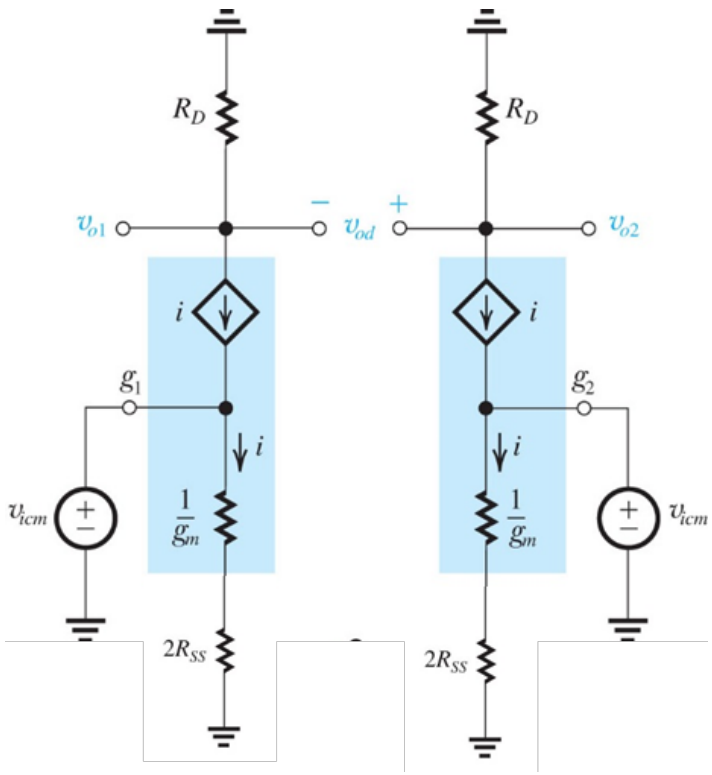

9.3.1 CM Half Circuits

- **Why is the tail current output resistance now $2R_{SS}$?**

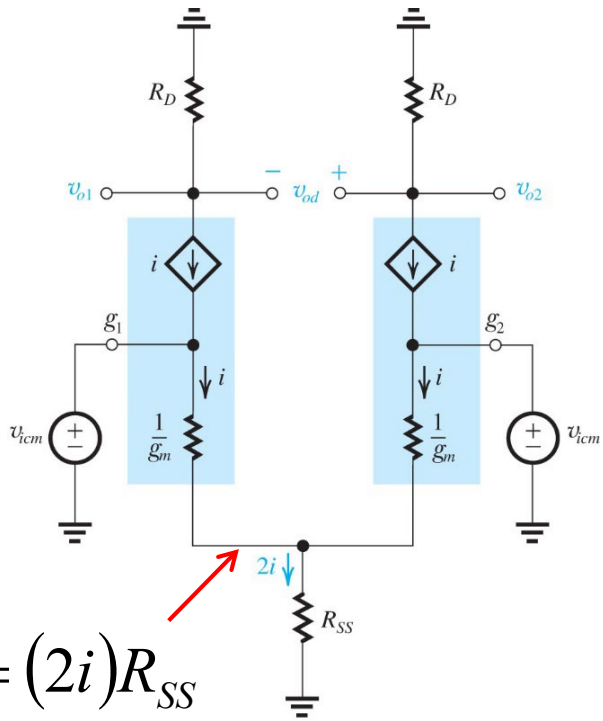

$$v_s = (2i)R_{SS}$$

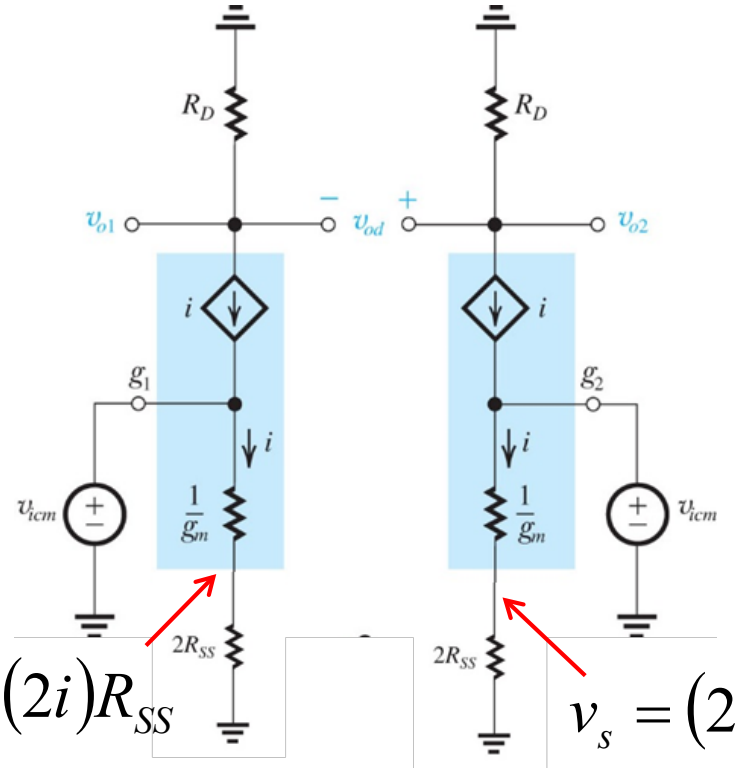

$$v_s = (2i)R_{SS}$$

$$v_s = (2i)R_{SS}$$

$$v_s = (2i)R_{SS} = i(2R_{SS})$$

9.3.1 **CM Half Circuits**

- **So now the analysis of common mode gain is easy … since it just reduces to two CS amplifiers with source resistors**

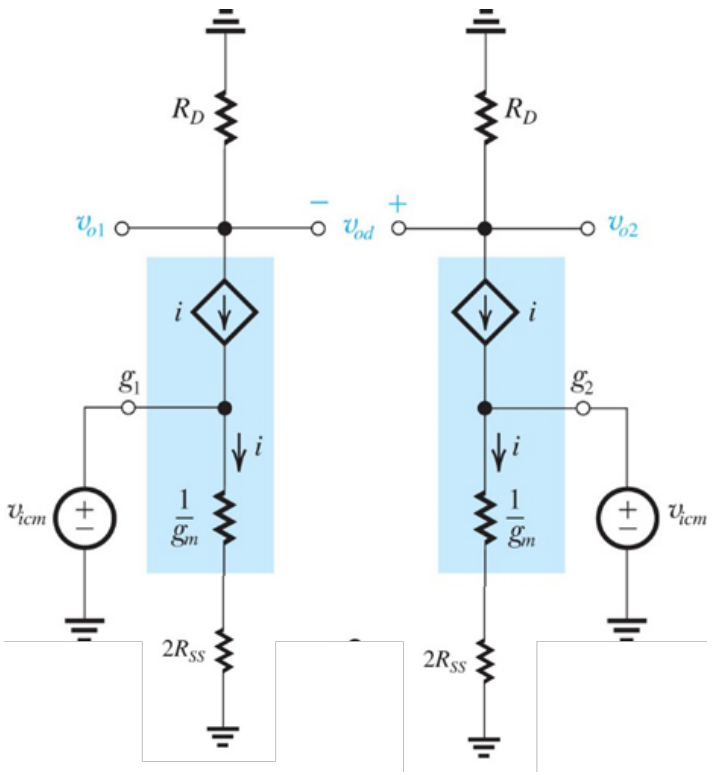

9.3.1 Common Mode Gain (neglecting r_o)

Single ended output

$$v_{icm} = i\left(\frac{1}{g_m} + 2R_{SS}\right)$$

$$i = \frac{v_{icm}}{\frac{1}{g_m} + 2R_{SS}}$$

$$v_{o1} = v_{o2} = -iR_D$$

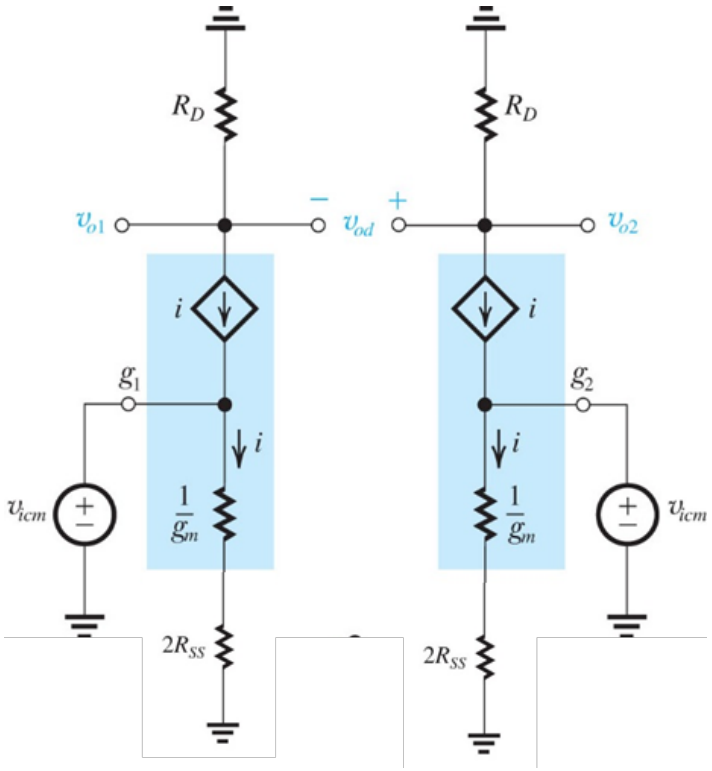

So

$$A_{cm,s.e} = \frac{v_{o1}}{v_{icm}} = \frac{v_{o2}}{v_{icm}} = -\frac{g_m R_D}{1 + 2g_m R_{SS}} \approx -\frac{R_D}{2R_{SS}}$$

9.3.1 Common Mode Gain (neglecting r_o)

Differential output

Well if everything is matched … e.g.,

$$R_D, g_m, \ etc.$$

then

$$v_{o1} = v_{o2} = -iR_D$$

and

$$A_{cm} = \frac{v_{o2} - v_{o1}}{v_{icm}} = 0V/V!!!$$

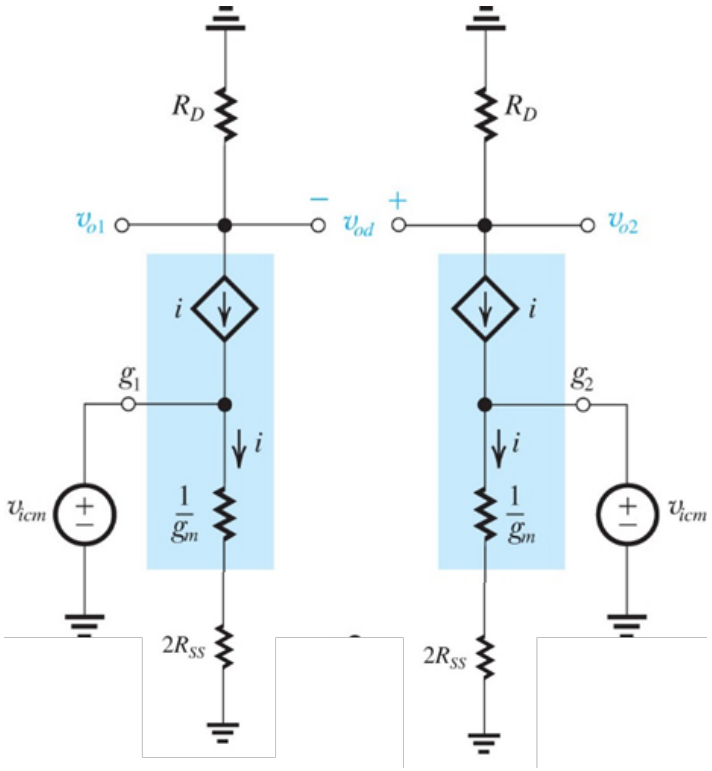

9.3.1 Effect of R_D Mismatch

- **What would be the differential output gain if the drain resistance differed by ΔR_D**

then

$$v_{o1} \approx -\frac{R_D}{2R_{SS}} v_{icm}$$

and

$$v_{o2} \approx -\frac{R_D + \Delta R_D}{2R_{SS}} v_{icm}$$

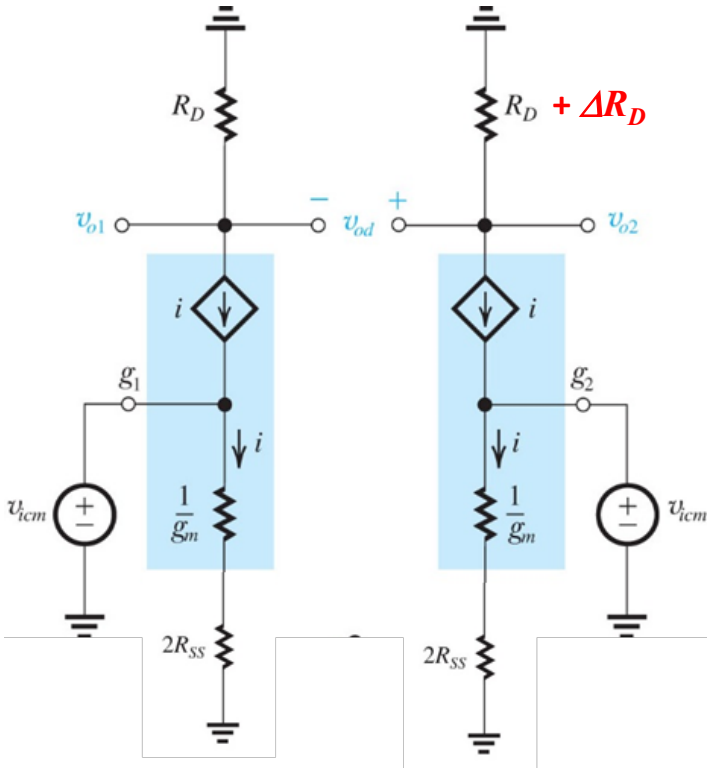

and

$$A_{cm} = \frac{v_{o2} - v_{o1}}{v_{icm}} \approx -\frac{\Delta R_D}{2R_{SS}} \neq 0V/V$$

9.3.1 Common Mode Rejection Ratio

- **A measure of the effectiveness of a differential amplifier in amplifying differential signals and rejecting common mode signals (which is what we want) is the COMMON MODE REJECTION RATIO defined as**

$$CMRR = \frac{|A_d|}{|A_{cm}|} \quad \text{OR} \quad CMRR(dB) = 20\log\left(\frac{|A_d|}{|A_{cm}|}\right)$$

For differential outputs

$$CMRR_{s.e.} = \frac{|A_{d,s.e.}|}{|A_{cm,s.e.}|} \quad \text{OR} \quad CMRR_{s.e.}(dB) = 20\log\left(\frac{|A_{d,s.e.}|}{|A_{cm,s.e.}|}\right)$$

For single-ended outputs

9.3.1 Common Mode Rejection Ratio (differential output)

- **For differential output configurations (neglecting r_o) we know** $|A_d| = g_m R_D$
- **But if everything (like R_D and g_m) is matched** $|A_{cm}| = 0V/V$
- **So for an ideal matched differential amplifier**

$$CMRR = \frac{|A_d|}{|A_{cm}|} = \infty!!$$

Infinite Rejection .. That's good

- **If we have R_D mismatch we see that**

$$CMRR = \frac{|A_d|}{|A_{cm}|} \approx \frac{g_m R_D}{\Delta R_D / 2R_{SS}} = \frac{(2 g_m R_{SS})}{\Delta R_D / R_D}$$

Still good if $\Delta R_D << R_D$

9.3.1 Common Mode Rejection Ratio (single-ended output)

- **For single-ended output configurations (neglecting r_o) we know** $\left|A_{d,s.e.}\right| = \dfrac{g_m R_D}{2}$

  since $\left|v_{o1}\right| = \left|v_{o2}\right| = g_m R_D \left(\dfrac{v_{id}}{2}\right)$ *See lecture 34 slide 16*

- **But even if everything is matched** $\left|A_{cm}\right| \approx \dfrac{R_D}{2R_{SS}}$

- **So for an ideal matched differential amplifier**

$$CMRR_{s.e.} = \frac{\left|A_{d_{s.e.}}\right|}{\left|A_{cm_{s.e.}}\right|} = g_m R_{SS}$$

That's why we like differential outputs more .. for common mode noise suppression