Unit #6
Chapter #9.5: Differential Amplifier with Current Mirror Load
Lecture 35

from **Microelectronic Circuits** Text
by Sedra and Smith
Oxford Publishing

9.5.2 Current Mirror Loading

- **A very common differential amplifier design uses a current mirror to as the load**

- **Note that Q_3 is diode-connected**

- **$V_{SG3} = V_{SG4} = V_{SD3}$**

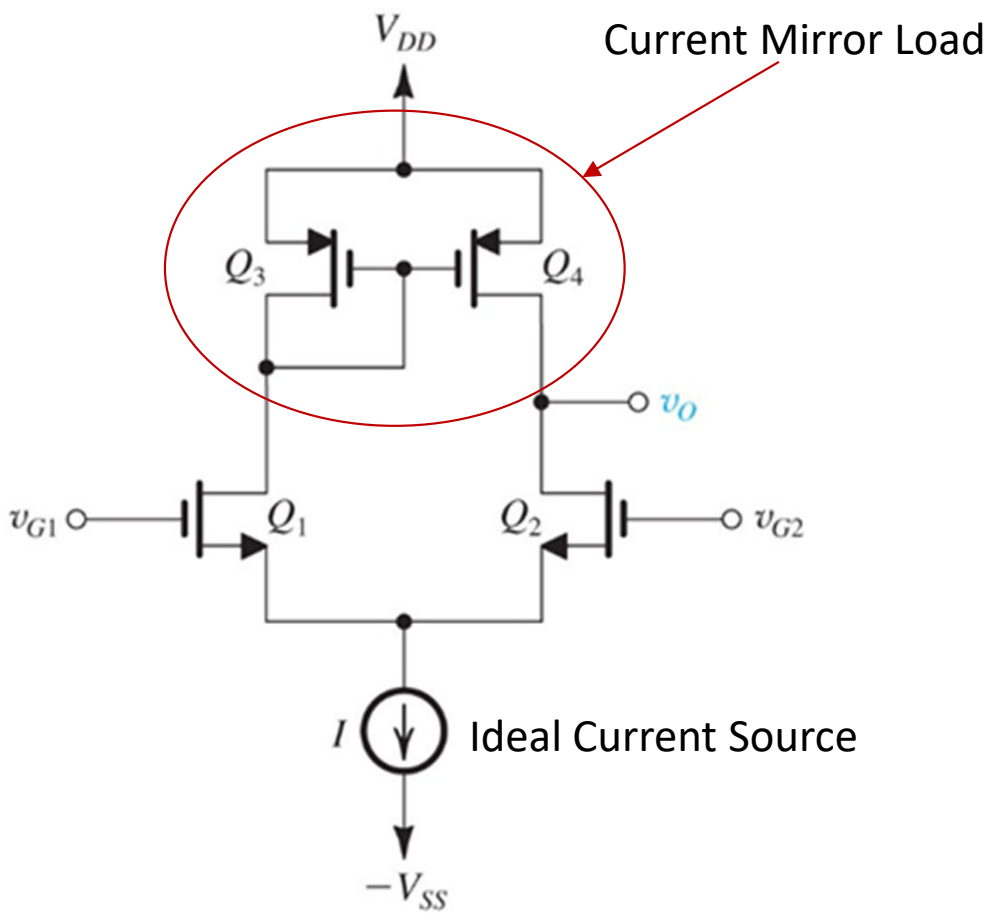

9.5.2 Common Mode (Large Signal)

- **In DC common mode**

$$V_{G1} = V_{G2} = V_{CM}$$

- **So if Q_1 and Q_2 are matched the tail current splits evenly into I/2**

- **If Q_3 and Q_4 are also matched**

$$V_O = V_{D3} = V_{DD} - V_{SG3}$$

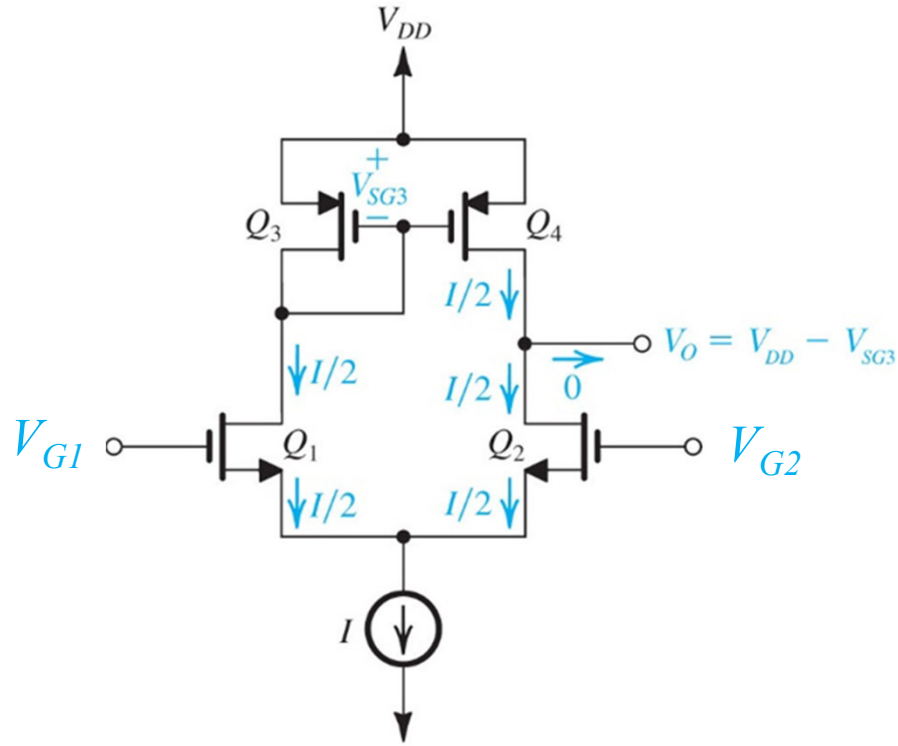

If $\lambda = 0V^{-1}$, what is V_O?

$I/2 = 1/2Kp'(W/L)_3\ (V_{sg3}-|Vtp|)^2$

$V_{sg3} = \sqrt{I/(Kp'\left(\frac{W}{L}\right)_3} + |Vtp|$

Then $Vo = V_{DD} - V_{sg3}$

9.5.2 Differential Mode (a quick look)

- **For a small signal differential input**

$$v_{id} = v_{G1} - v_{G2}$$

- **Assume the same matching conditions and neglect r_o (for now)**

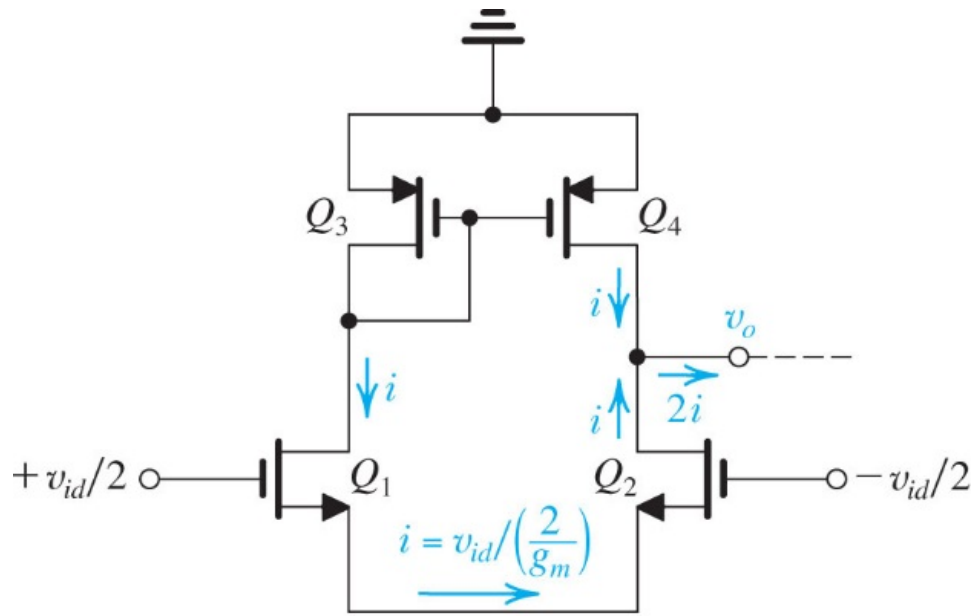

- **We see that unlike the previous designs that used passive resistors or independent current sources … this design generates an output current of 2i … which will give us 2x the single ended output gain … *let's see why***

9.5.2 Differential Mode (a quick look)

Independent Loading

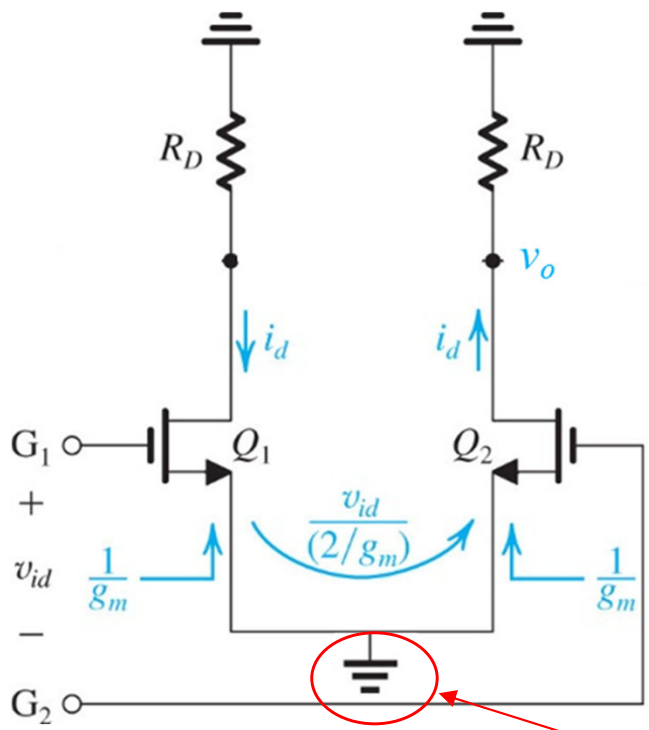

Virtual ground since both legs are matched (half circuits)

Current Mirror Loading

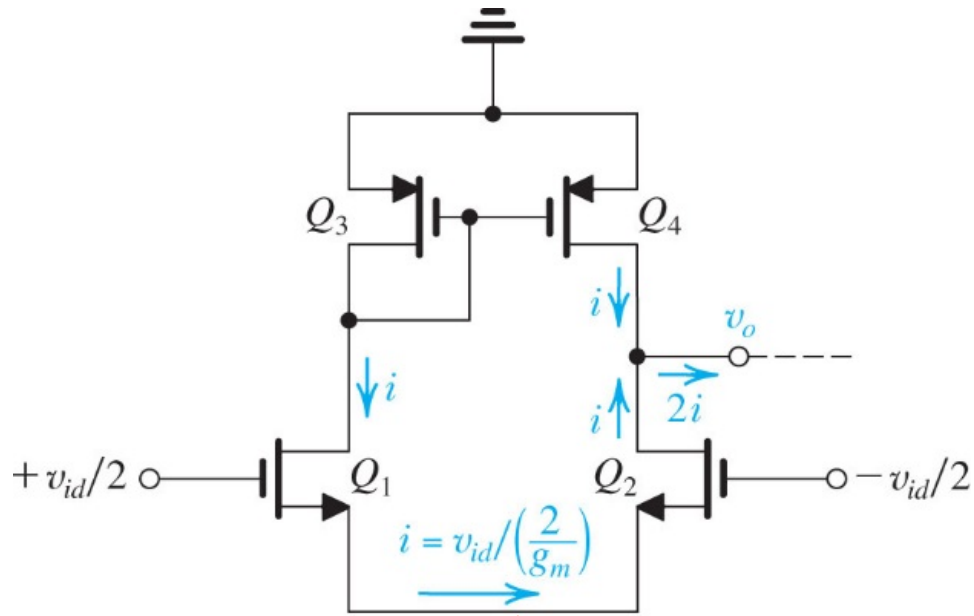

Not exactly ground since legs are NOT matched

9.5.2 Differential Mode Gain (a quick look)

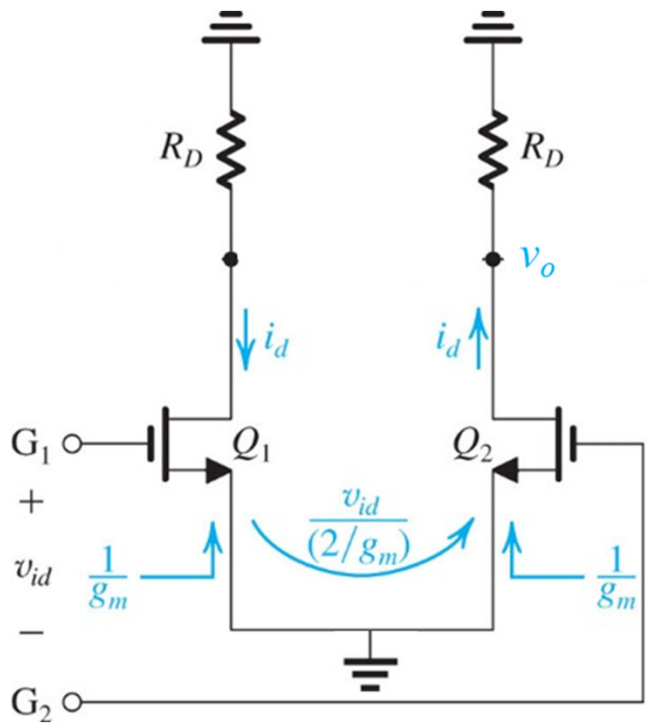

$$v_o = i_d R_D = \frac{v_{id}}{2} g_m R_D$$

$$A_{ds.e.} = \frac{v_o}{v_{id}} = \frac{g_m R_D}{2}$$

With the same output load (neglecting r_o)

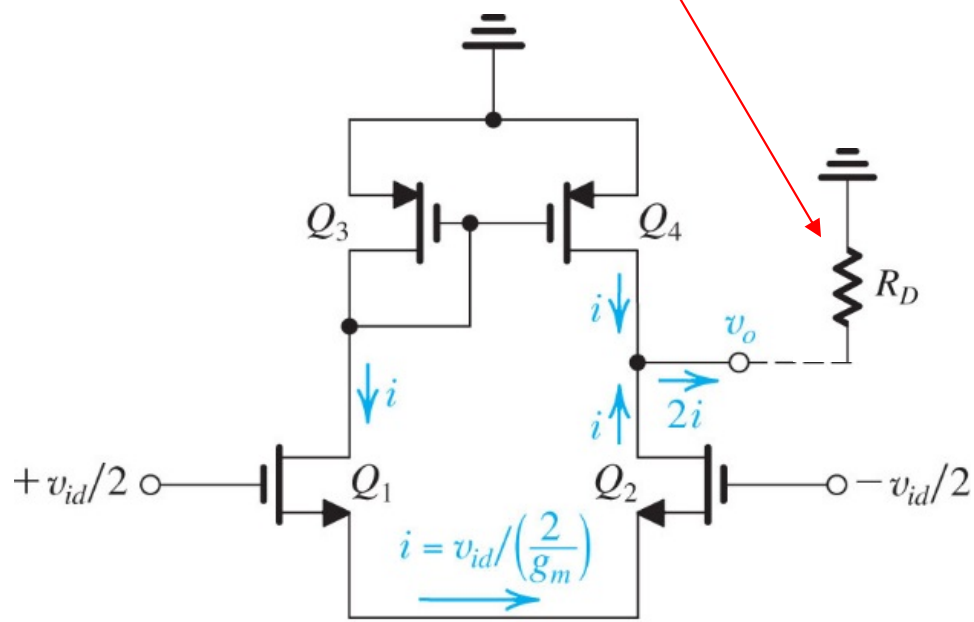

$$v_o = 2iR_D = 2\frac{v_{id}}{2} g_m R_D$$

$$A_{ds.e.} = \frac{v_o}{v_{id}} = g_m R_D$$

Twice the single ended output gain!

9.5.3 Differential Mode Gain Full Derivation with r_o

- When r_o is included in the analysis, things can get a little tricky ..

- Recall from Lecture 19, amplifier gains can be derived from Thévenin equivalent output circuit

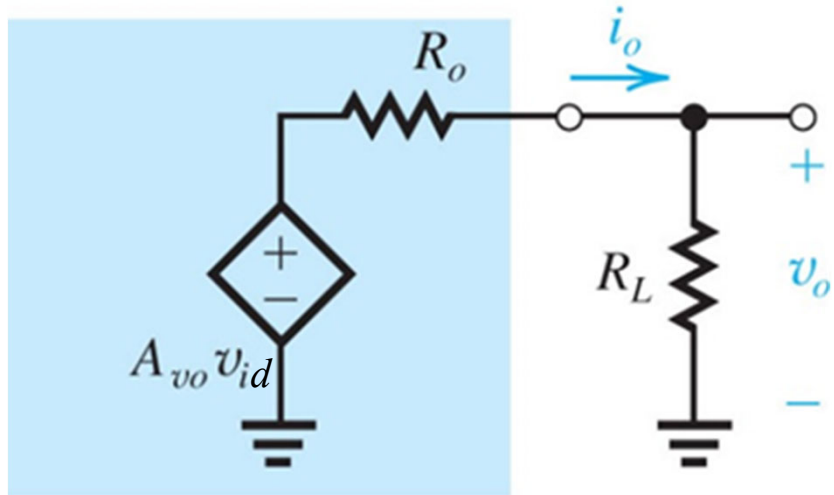

$$A_v = \frac{v_o}{v_{id}} = A_{vo}\frac{R_L}{R_L + R_o}$$

Open circuit voltage gain

Output resistance

9.5.3 Differential Mode Gain Full Derivation with r_o

- **Or with a Norton equivalent output circuit**

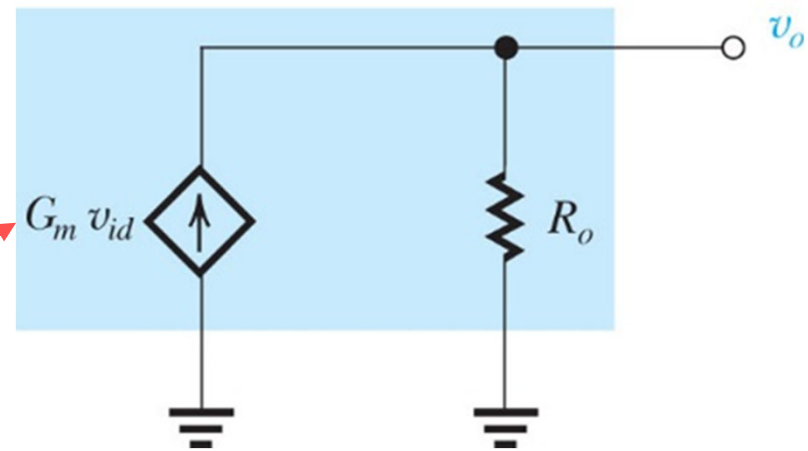

Short circuit transconductance

$$G_m v_{id} R_o = A_d v_{id}$$

so

$$G_m R_o = A_d$$

- **In the case of the differential amplifier with r_o, it's easiest to get gain by getting G_m and R_o**

9.5.3 Short Circuit Current Gain

- **Now we do the same thing for the full diff amp circuit**

$$G_m = \frac{i_o}{v_{id}}$$

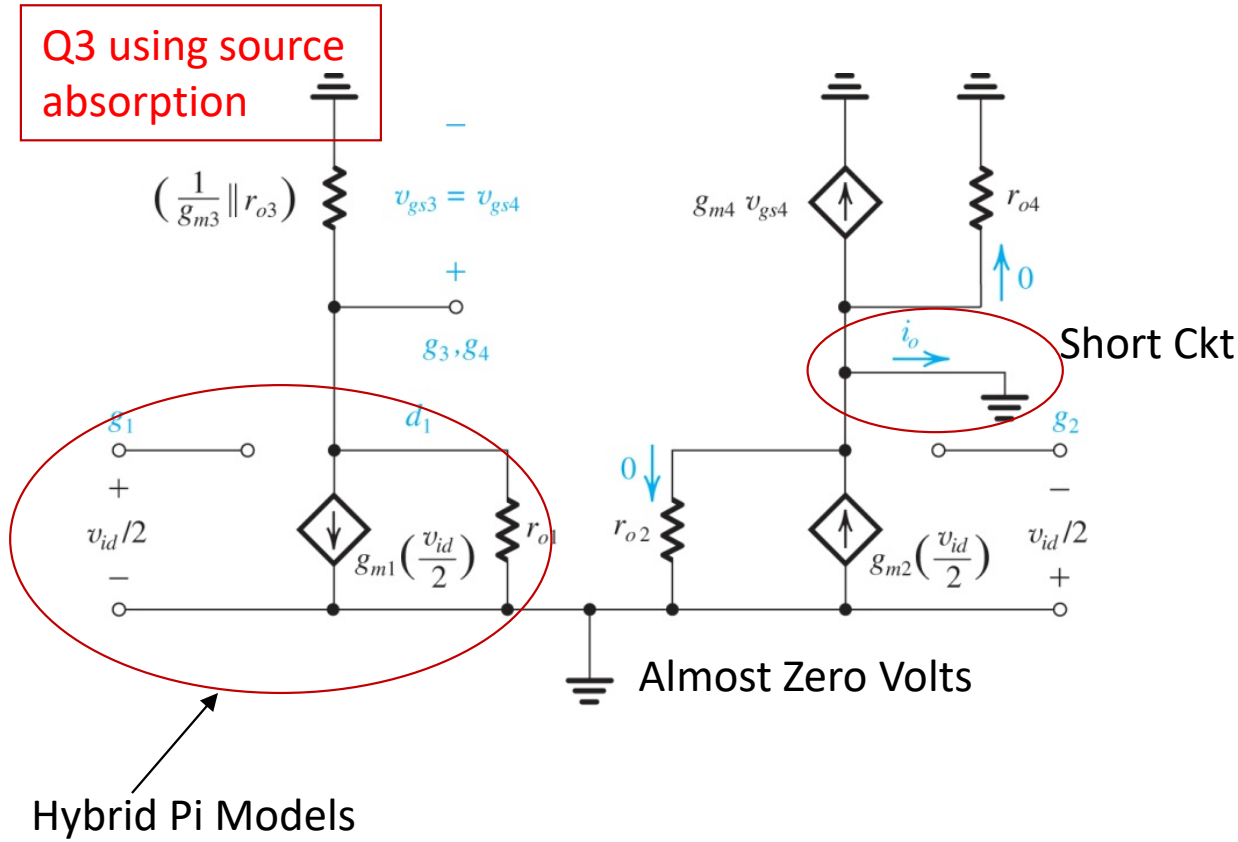

9.5.3 Short Circuit Current Gain

- **Now we do the same thing for the full diff amp circuit**
- **Note that the current through r_{o2} is almost 0A ... Why?**

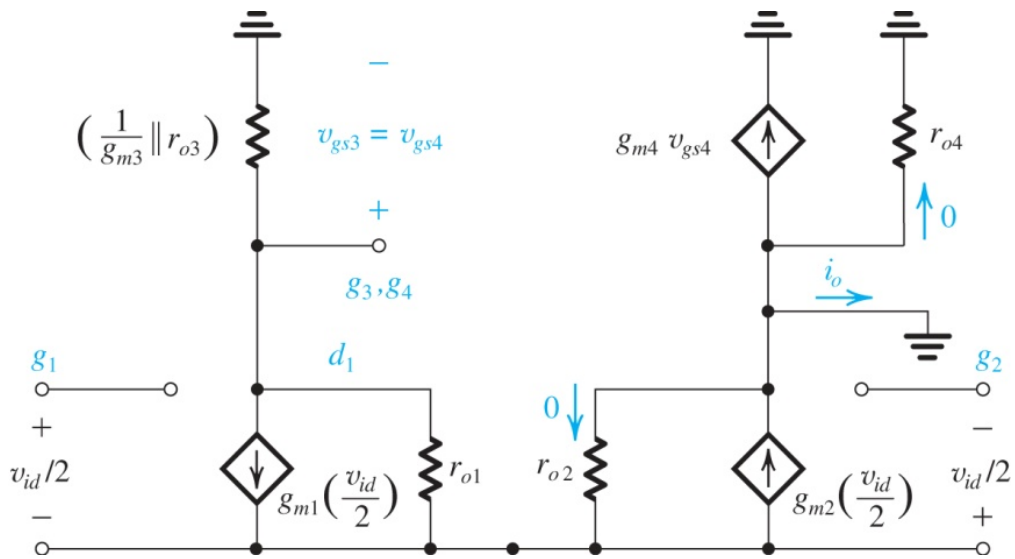

$$v_{gs3} \approx i_3\left(\frac{1}{g_{m3}} \| r_{o3}\right) = \frac{i_3}{g_{m3}} \text{ is small}$$

$$\Rightarrow \quad \therefore i_3 = g_{m3} v_{gs3} \approx -g_{m1}\frac{v_{id}}{2}$$

$$i_{ro2} = \frac{-v_{gs3}}{r_{o1} + r_{o2}} \approx 0$$

$$V_{gs3} = -\, g_{m1}/g_{m3} * v_{id}/2$$

9.5.3 Short Circuit Current Gain

- **So we have**

$$i_o = g_{m2}\frac{v_{id}}{2} - g_{m4}v_{gs4}$$

but

$$v_{gs4} = v_{gs3}$$

- **And**

$$v_{gs3} \approx -\frac{1}{g_{m3}} g_{m1}\frac{v_{id}}{2}$$

From previous slide

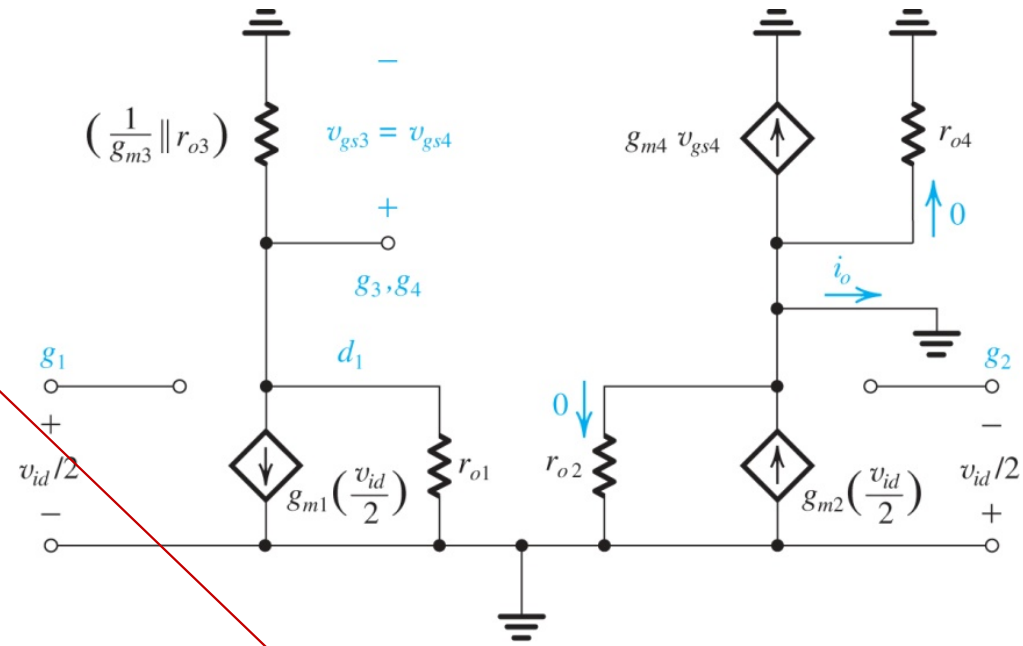

$$i_o = g_{m1}v_{id}$$

So

$$G_m = g_{m1} \text{ if}$$

$$g_{m1} = g_{m2} \;\&\; g_{m3} = g_{m4}$$

Remember
Gm = i_o/v_{id}

9.5.3 Output Resistance

- **$A_d = G_m R_o$ - Found $G_m = g_{m1}$, Now let's find R_o**

- **R_{in1} is like the CG input resistance (Lecture 22)**

$$R_{in1} \approx \frac{\frac{1}{g_{m3}} + r_{o1}}{1 + g_{m1} r_{o1}}$$

$$\approx \frac{1}{g_{m1}}$$

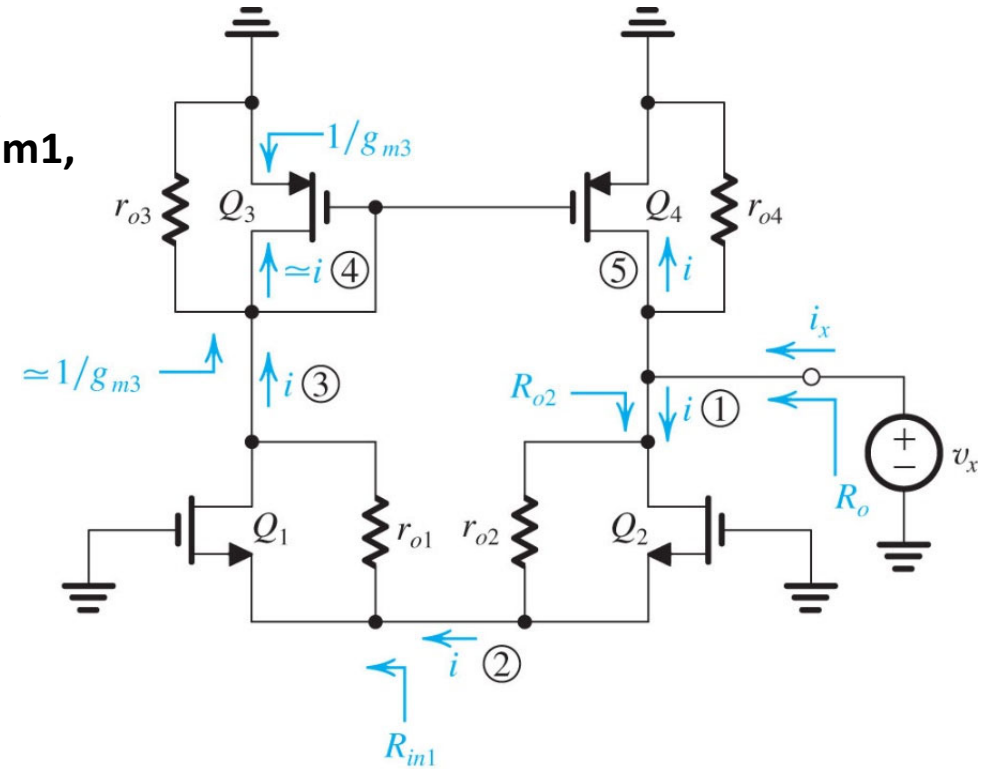

CG input resistance

$$\text{Rin(CG)} = \frac{ro + R_L}{1 + g_m ro}$$

Where $R_L = 1/g_{m3}$

9.5.3 Output Resistance

- **R_{o2} is like the CG output resistance (Lecture 22)**

$$R_{o2} \approx \frac{1}{g_{m1}} + r_{o2} + g_{m2} r_{o2} \frac{1}{g_{m1}}$$
$$\approx 2r_{o2}$$

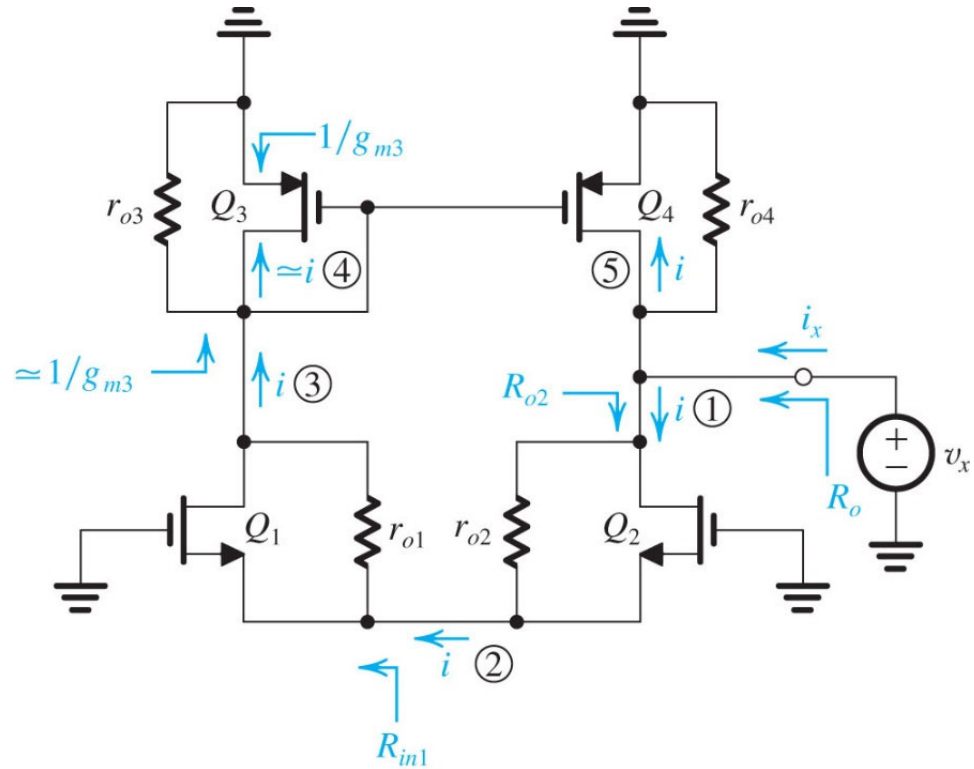

CG output resistance

$R_o = r_o + R_s + g_m r_o R_s$

Where $r_o = r_{o2}$
$R_s = R_{in1} = 1/g_{m1}$
$g_m = g_{m2}$

9.5.3 Output Resistance

- **Remember $R_{o2} = 2r_{o2}$**
- **Finally, the output resistance can be obtained as**

$$i_x \approx 2i + \frac{v_x}{r_{o4}}$$

$$\approx 2\frac{v_x}{R_{o2}} + \frac{v_x}{r_{o4}}$$

$$= v_x\left(\frac{1}{r_{o2}} + \frac{1}{r_{o4}}\right)$$

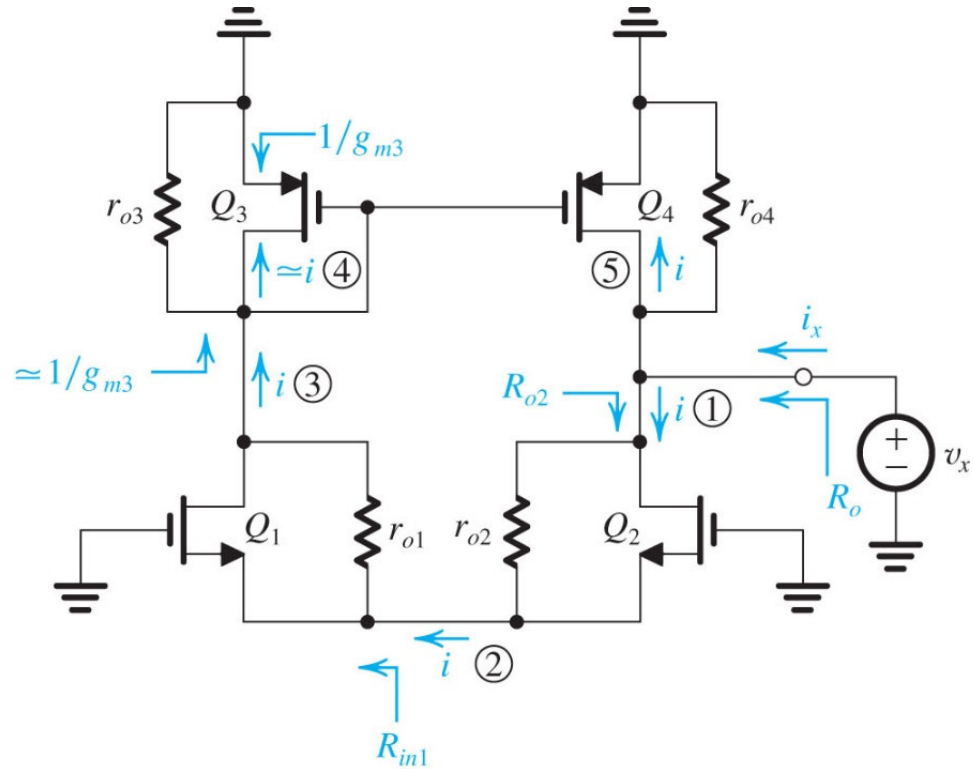

- **So** $$R_o = \frac{v_x}{i_x} \approx \frac{1}{1/r_{o2} + 1/r_{o4}}$$

$$R_o = r_{o2} \parallel r_{o4}$$

9.5.3 Differential Mode Gain

- **And finally we can get an expression for the differential mode gain**

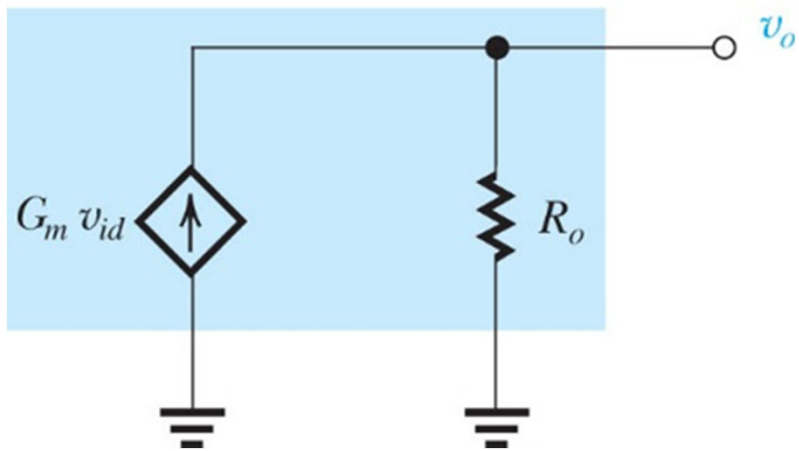

$$A_d = \frac{v_o}{v_{id}} = G_m R_o$$

$$A_d = g_{m1}\left(r_{o2} \parallel r_{o4}\right) \approx \frac{1}{2} g_m r_o$$

If all transistors are matched

9.5.5 Common Mode Gain

- **To get the common mode gain the tail current source must have a finite output resistance, R_{SS}.**

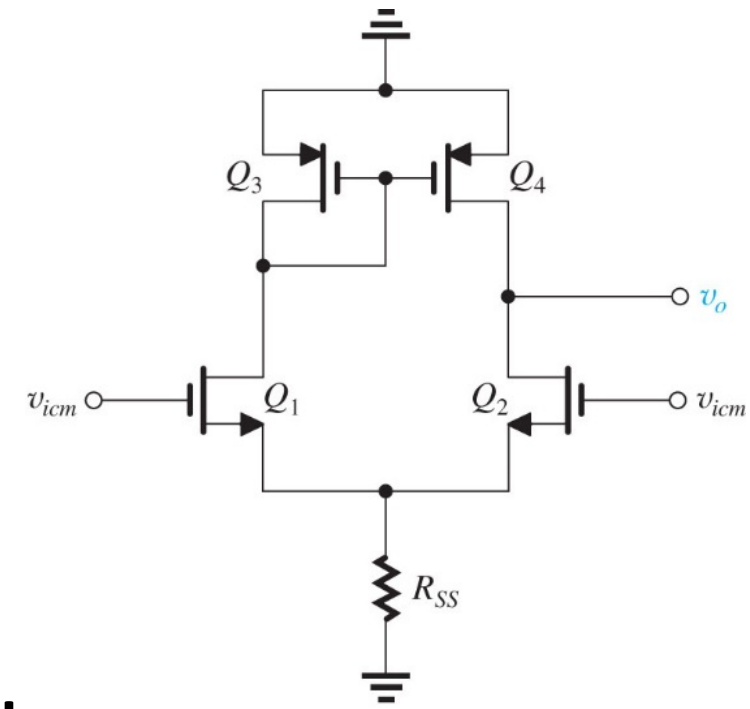

- **We won't do the derivation here, but in the book you will find (p. 636)**

$$A_{cm} \approx -\frac{1}{2g_{m3}R_{SS}}$$

9.5.5 **CMRR**

- **So the common mode rejection ratio (CMRR) is**

$$CMRR = \frac{|A_d|}{|A_{cm}|}$$

$$\approx g_{m1}(r_{o2} \parallel r_{o4})2g_{m3}R_{SS}$$

$$\approx g_m{}^2 r_o R_{SS}$$

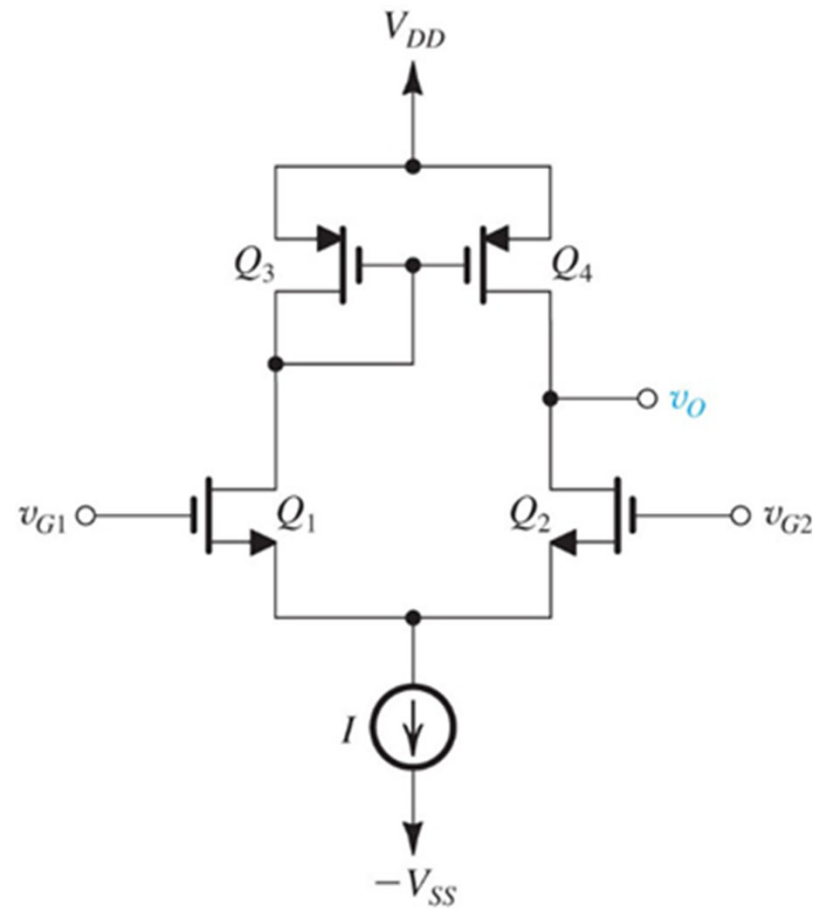

If all transistors are matched