Example 10.9

For the current mirror loaded differential amplifier below assume all transistors have the same W/L = 7.2um/.36um, k_n' = 387 uA/V^2, k_p' = 86 uA/V^2, V_{An}' = 5V/um, and $|V_{Ap}'|$ = 6V/um. The bias current is given to be 0.2 mA. In addition to the capacitors from the transistors, there is an extra load capacitor C_x = 25 fF. For all transistors the transistor capacitors are

C_{gs} = 20 fF
C_{gd} = 5 fF
C_{db} = 5 fF

Find the midband A_d, and the poles and zeros for the amplifier … graph the Bode plot

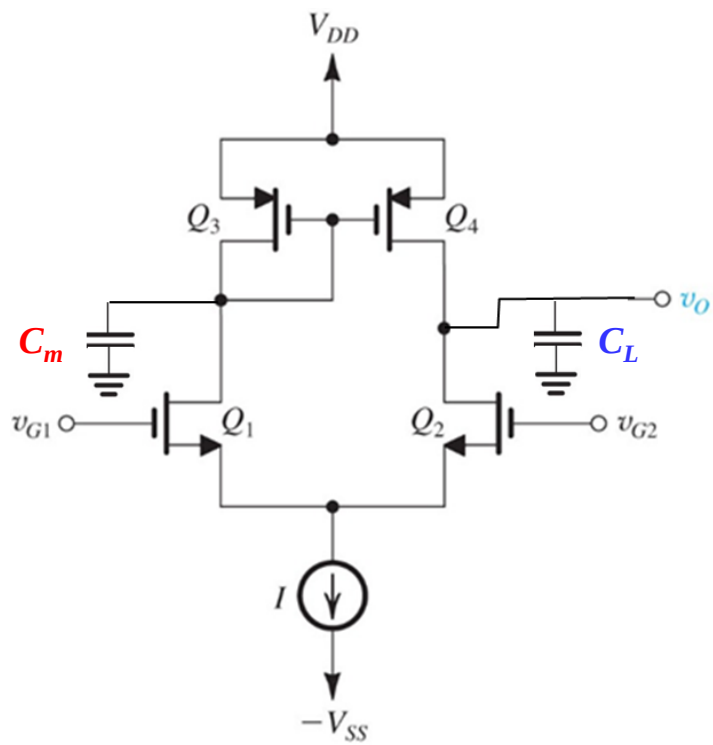

Example 10.9

W/L = 7.2um/.36um
k_n' = 387 uA/V^2
k_p' = 86 uA/V^2
V_{An}' = 5V/um
$V_{Ap}'|$ = 6V/um
I = 0.2 mA.
C_x = 25 fF.
C_{gs} = 20 fF
C_{gd} = 5 fF
C_{db} = 5 fF

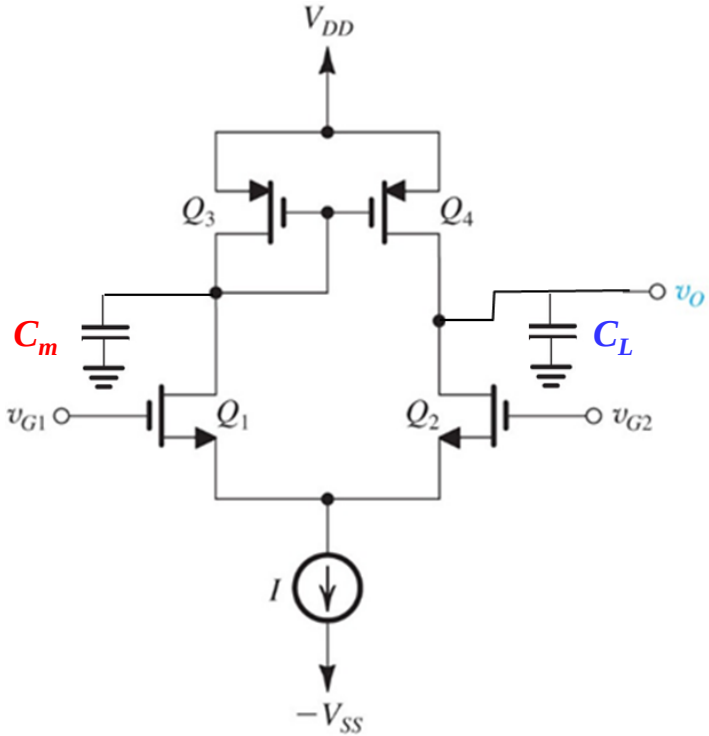

Example 10.9

W/L = 7.2um/.36um
k_n' = 387 uA/V^2
k_p' = 86 uA/V^2
V_{An}' = 5V/um
$V_{Ap}'|$ = 6V/um
I = 0.2 mA.
C_x = 25 fF.
C_{gs} = 20 fF
C_{gd} = 5 fF
C_{db} = 5 fF

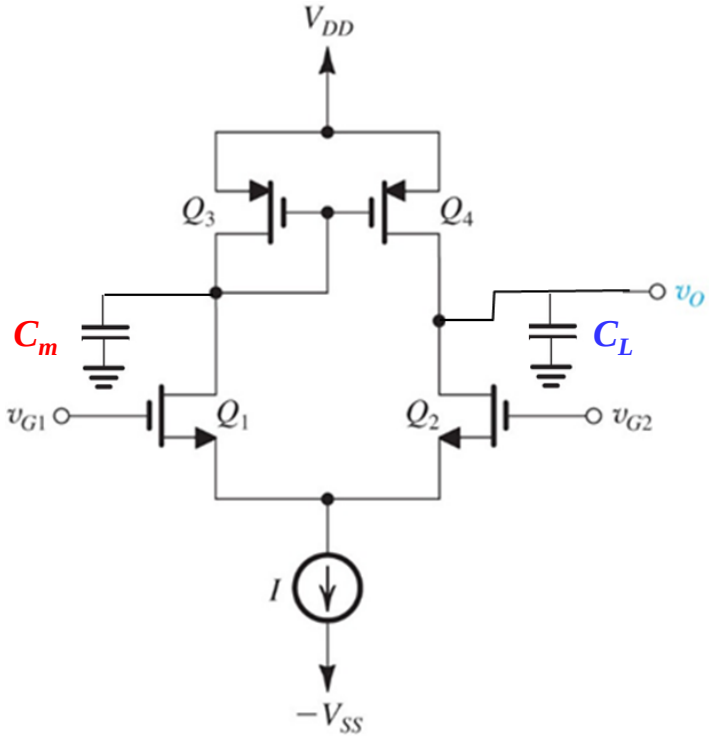
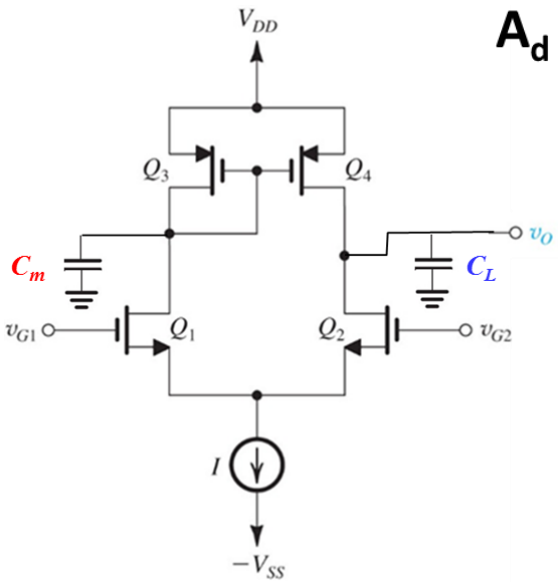
Example 10.9