# Unit #6
# Chapter #10.7.2: High Frequency Response of Differential Amplifier with Current Mirror Load

## Lecture 36

from **Microelectronic Circuits** Text

by Sedra and Smith

Oxford Publishing

# 9.5.2 Differential Amplifier with a Current Mirror Load

- **Recall, from Lecture 35, that a very common diff amp configuration is one that uses a current mirror load.**

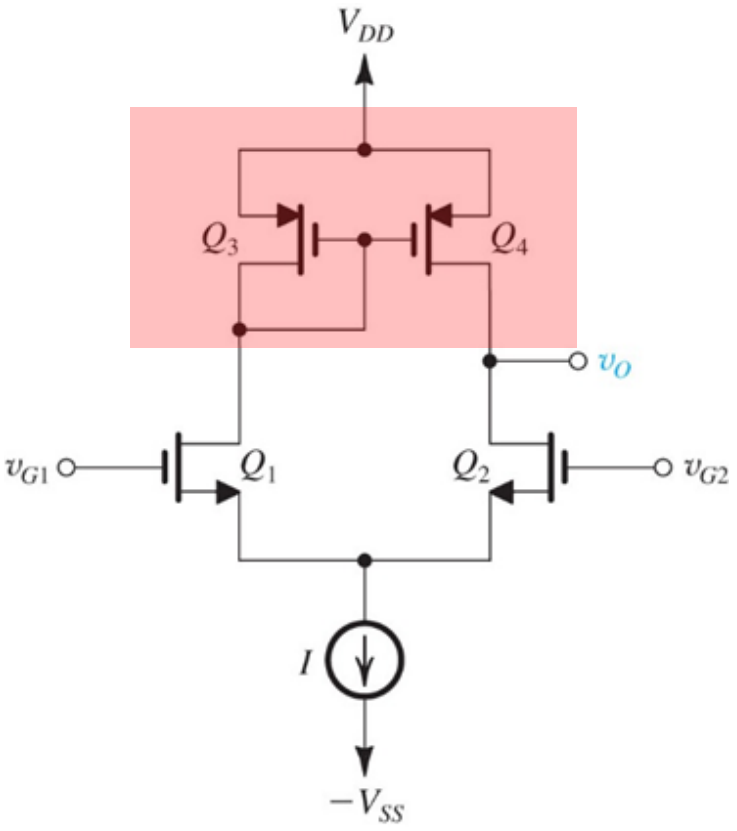

# 10.7.2 **Two Primary Capacitors**

- **The there two capacitors that impact the high frequency response of this amplifier**

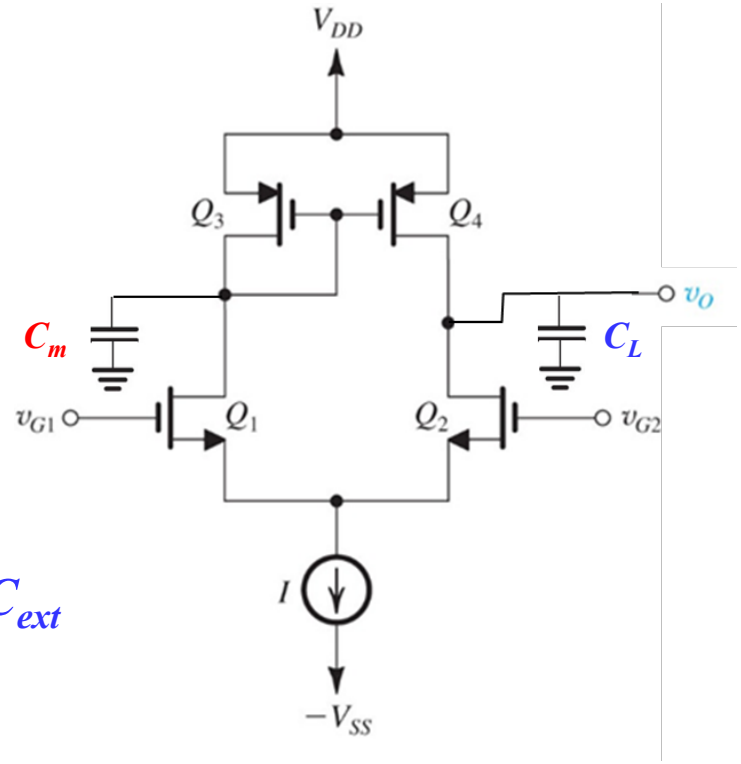


- **The load capacitor**

$$C_L = C_{gd2} + C_{db2} + C_{gd4} + C_{db4} + C_{ext}$$

- **The mirror capacitor**

$$C_m = C_{gs3} + C_{gs4} + C_{db3} + C_{db1} + C_{gd1}$$

# 9.5.3 **Midband Differential Gain**

- **In Lecture 35, we saw that the midband differential gain of the amplifier was**

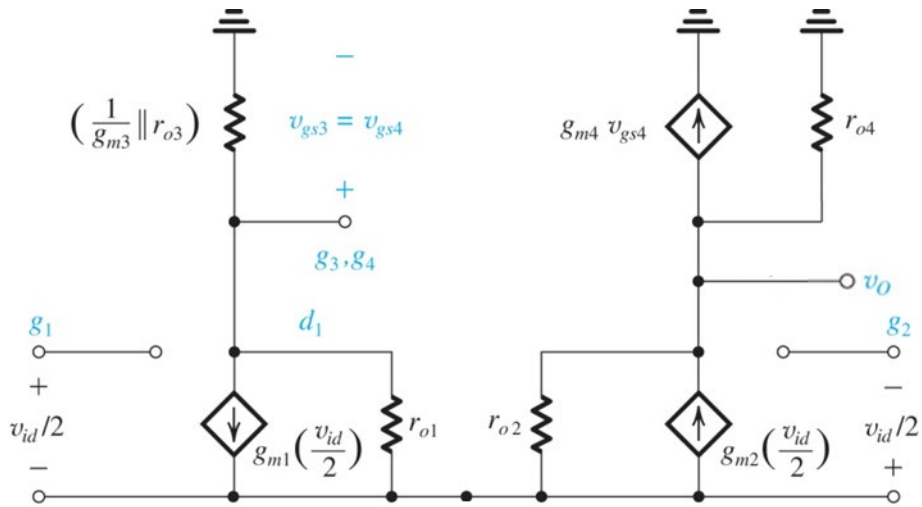


$$A_d = g_{m1}\left(r_{o2} \| r_{o4}\right) \approx \frac{1}{2} g_m r_o$$

***If all transistors are matched***

# 10.7.2 **High Frequency Response**

- **The addition of the load and mirror capacitors add two poles and one zero to the high frequency response**

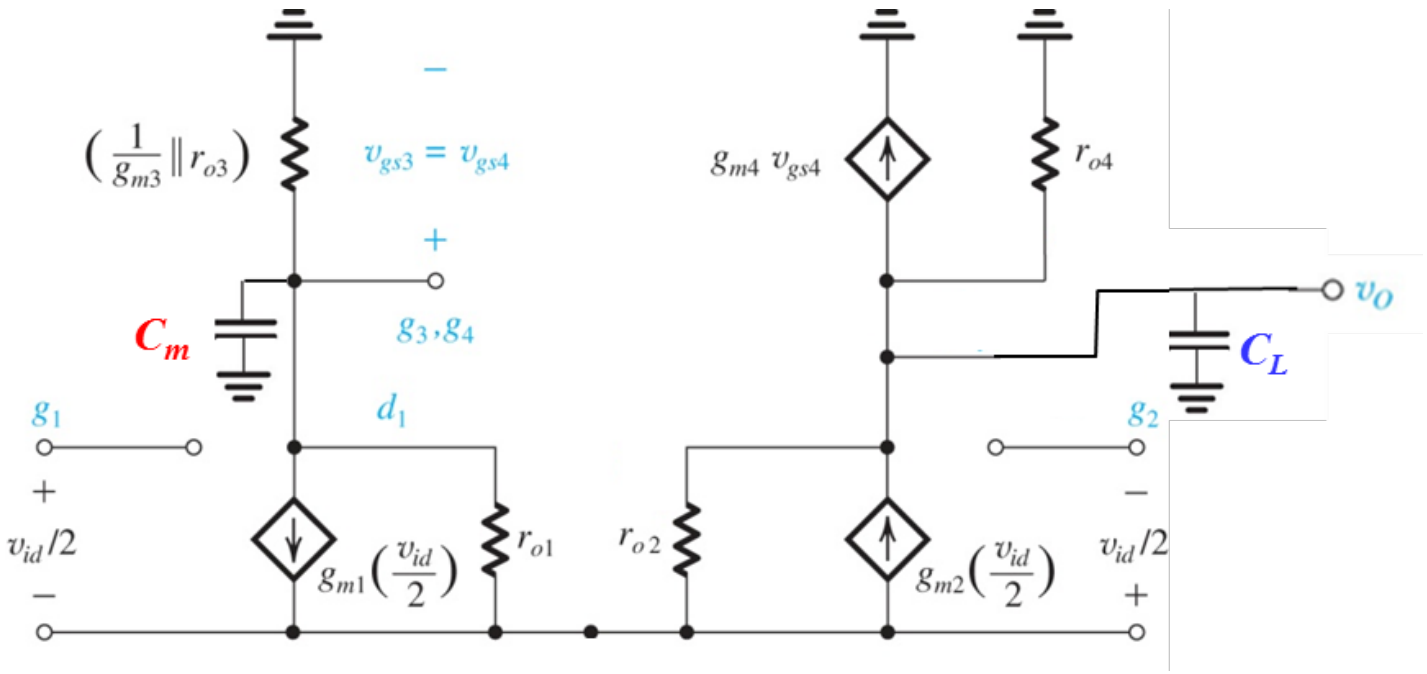

# 10.7.2 **High Frequency Response**
## **The Load Pole**

- **The pole created by the load capacitor is easy …**

- **… the resistance "seen" by $C_L$ is just the output resistance of the amplifier**

$$R_o = r_{o2} \parallel r_{o4} \sim r_o/2$$

- **So the open circuit time constant created by $C_L$ is**

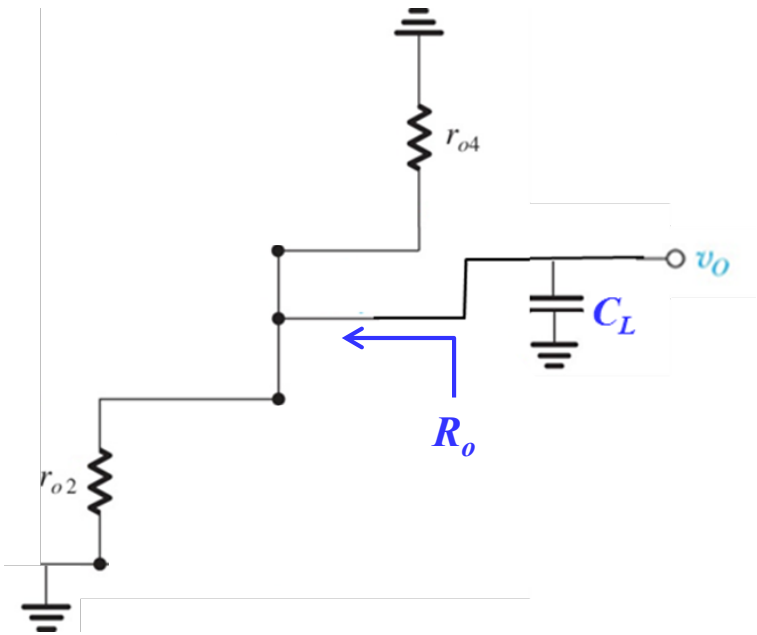


$$\tau_L = R_o C_L \approx \frac{r_o C_L}{2}$$

# 10.7.2 **Frequency Response of Output Impedance**

- **From Lecture 35, we derived midband gain by calculating output resistance, $R_o$, and short circuit transconductance, $G_m$, independently**

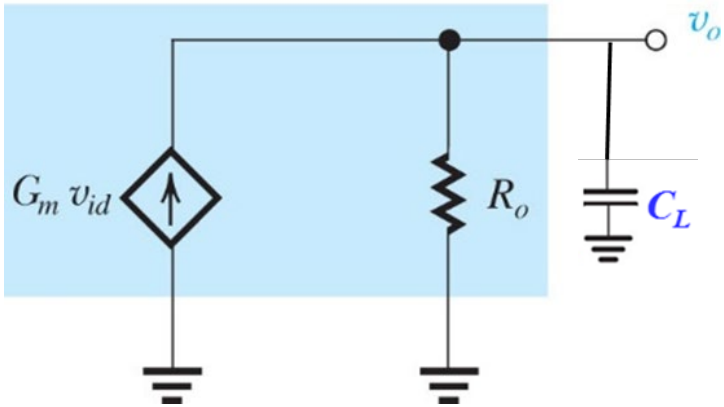


$$A_d = G_m R_o$$

- **When the load capacitance is added, $R_o$, becomes an output impedance**

$$Z_o = R_o \parallel \frac{1}{sC_L} = \frac{R_o}{1 + sR_oC_L}$$

# 10.7.2 **Frequency Response of Output Impedance**

- **So the differential gain response to this frequency dependent output impedance is**

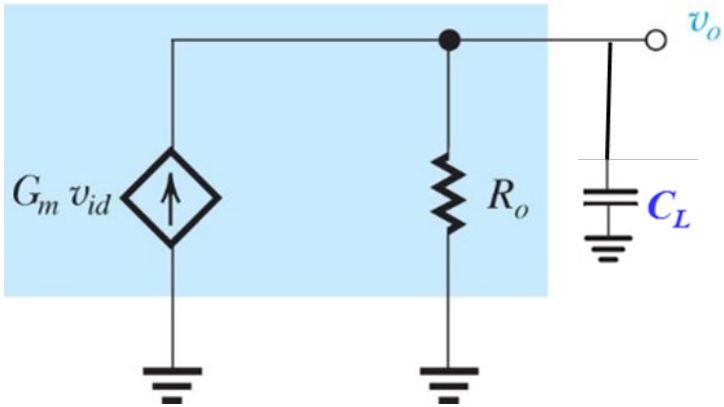


$$A_d(s) = G_m(s) Z_o(s)$$

$$= G_m(s)\left(\frac{R_o}{1 + sR_oC_L}\right)$$

***Note that $G_m$ will also be dependent on frequency … but through the mirror capacitor, $C_m$***

# 10.7.2 **High Frequency Response**
# **The Mirror Pole and Zero**

- **The effect of the mirror capacitor, $C_m$, is more complicated**

- **We will now see that it creates both a pole and a zero at high frequencies**

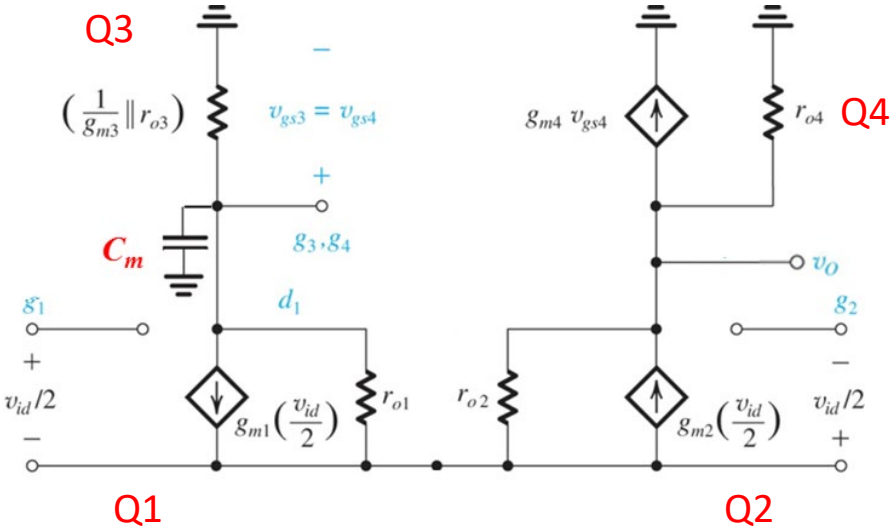


$C_m = C_{gs3} + C_{gs4} + C_{db3} + C_{db1} + C_{gd1}$

# 10.7.2 **High Frequency Response The Mirror Pole and Zero**

- **As we mentioned in the previous slide, $C_m$ affects the differential gain by impacting the short circuit transconductance, $G_m$**

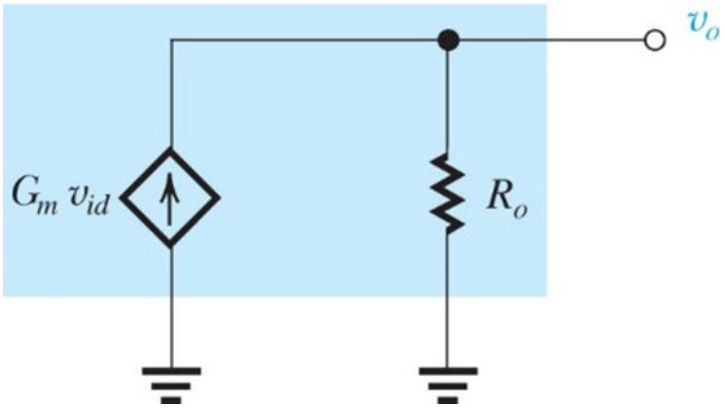


$$A_d(s) = G_m(s) Z_o(s)$$

$$= G_m(s)\left(\frac{R_o}{1 + sR_oC_L}\right)$$

# 10.7.2 **Deriving Frequency Dependence of $G_m$**

- **Recall, $G_m$ can be derived by shorting the output and find the ratio**

$$G_m(s) = \frac{I_o(s)}{V_{id}(s)}$$

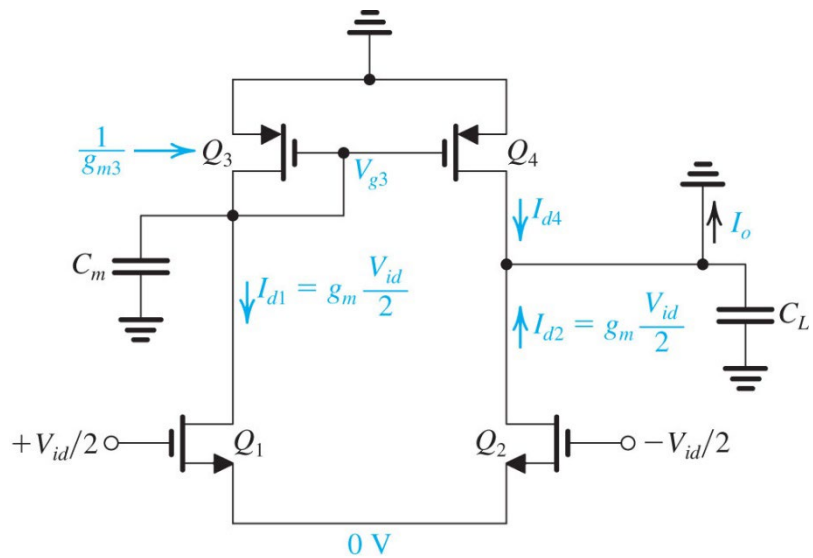


- **Note that the load capacitor, $C_L$ is shorted out, so it has no effect on $G_m$ … that's helpful**

# 10.7.2 **Deriving Frequency Dependence of $G_m$**

- **To simplify things a bit, we see that the resistance at the mirror node is**

$$R_m = \frac{1}{g_{m3}} \parallel r_{o1} \parallel r_{o3} \approx \frac{1}{g_{m3}}$$

- **So the voltage a the mirror node is approximately**

$$Z_m = \frac{1}{g_{m3} + sC_m}$$

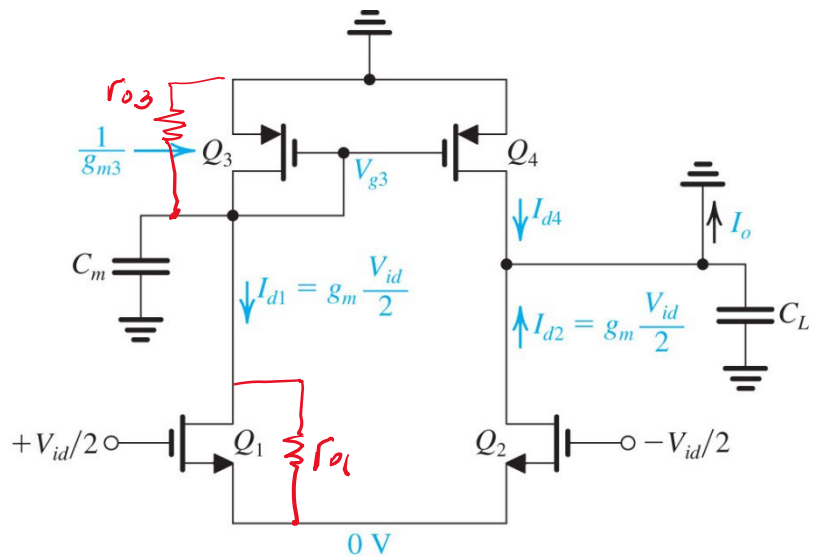


$V_{gs3} \approx I_{d1} * Z_m$

$$V_{g3} \approx -\frac{g_m \frac{V_{id}}{2}}{g_{m3} + sC_m}$$

# 10.7.2 Deriving Frequency Dependence of $G_m$

$$V_{g3} \approx -\frac{g_m \frac{V_{id}}{2}}{g_{m3} + sC_m}$$

- **Since $V_{g3} = V_{g4} = -v_{sg4}$, the current $I_{d4}$ is**

$$I_{d4} = -g_{m4} V_{g3}$$

$$\approx \frac{g_{m4} g_m \frac{V_{id}}{2}}{g_{m3} + sC_m}$$

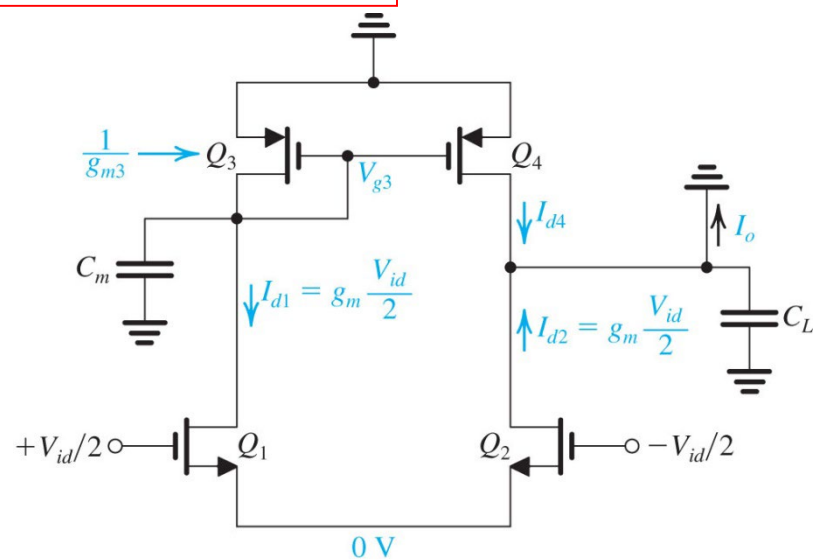


- **And since Q3 and Q4 are matched, $g_{m3} = g_{m4}$ and**

$$I_{d4} \approx \frac{g_m \frac{V_{id}}{2}}{1 + \frac{sC_m}{g_{m3}}}$$

# 10.7.2 Deriving Frequency Dependence of $G_m$

$$I_{d4} \approx \frac{g_m \frac{V_{id}}{2}}{1+\frac{sC_m}{g_{m3}}}$$

- **Finally we are able to express the short circuit $I_o$ as a function of $V_{id}$ … and get $G_m(s)$**

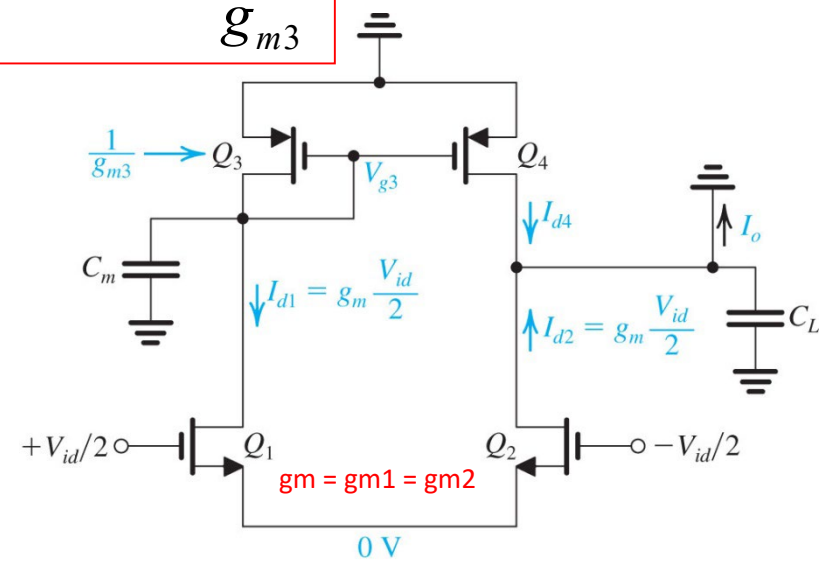


$$I_o = I_{d2} + I_{d4}$$

$$= g_m \frac{V_{id}}{2} + \frac{g_m \frac{V_{id}}{2}}{1+\frac{sC_m}{g_{m3}}}$$

$$G_m(s) = I_o/V_{id} = g_m \left[\frac{\frac{1}{2}+\frac{sCm}{2gm3}+\frac{1}{2}}{1+\frac{sCm}{gm3}}\right]$$

$$I_o = g_m V_{id} \left[ \tfrac{1}{2} + \tfrac{1}{2} /(1+sC_m/g_{m3})\right]$$

$$G_m(s) = \frac{I_o}{V_{id}} \approx g_m \left( \frac{1+s\frac{C_m}{2g_{m3}}}{1+s\frac{C_m}{g_{m3}}} \right)$$

Zero

Pole



Oxford University Publishing
Microelectronic Circuits by Adel S. Sedra and Kenneth C. Smith (0195323033)

# 10.7.2 **Characteristics of $G_m$**

$$G_m(s) = g_m \left( \frac{1 + s\dfrac{C_m}{2g_{m3}}}{1 + s\dfrac{C_m}{g_{m3}}} \right)$$

***Zero at*** $\omega_z = \dfrac{2g_{m3}}{C_m}$

***OCTC Time constant***

$$\tau_m = \frac{C_m}{g_{m3}}$$

***Pole at*** $\omega_m = \dfrac{g_{m3}}{C_m}$

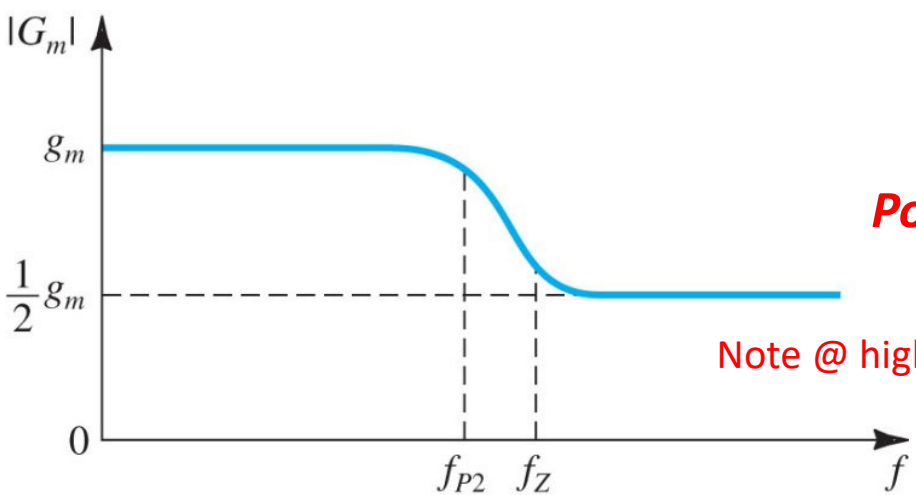


Note @ high frequency magnitude of G(s) = ½ $g_m$

# 10.7.2 **Full Differential Gain High Frequency Response**

$$A_d(s) = \frac{V_o(s)}{V_{id}(s)} = G_m(s) Z_o(s)$$

$$= g_m R_o \left( \frac{1 + s\dfrac{C_m}{2g_{m3}}}{1 + s\dfrac{C_m}{g_{m3}}} \right) \left( \frac{1}{1 + sR_o C_L} \right)$$

- **Pole 1 (the load pole is function of $C_L$** $\quad \omega_{p1} = \dfrac{1}{R_o C_L}$
- **Pole 2 (the mirror pole) is function of $C_m$** $\quad \omega_{p2} = \dfrac{g_{m3}}{C_m}$
- **Zero is function of $C_m$** $\quad \omega_z = \dfrac{2g_{m3}}{C_m}$



Oxford University Publishing
Microelectronic Circuits by Adel S. Sedra and Kenneth C. Smith (0195323033)

# 10.7.2 **Bode Plot of Differential Gain**

- **Typically** $\omega_{p1} << \omega_{p2} = \dfrac{\omega_z}{2}$

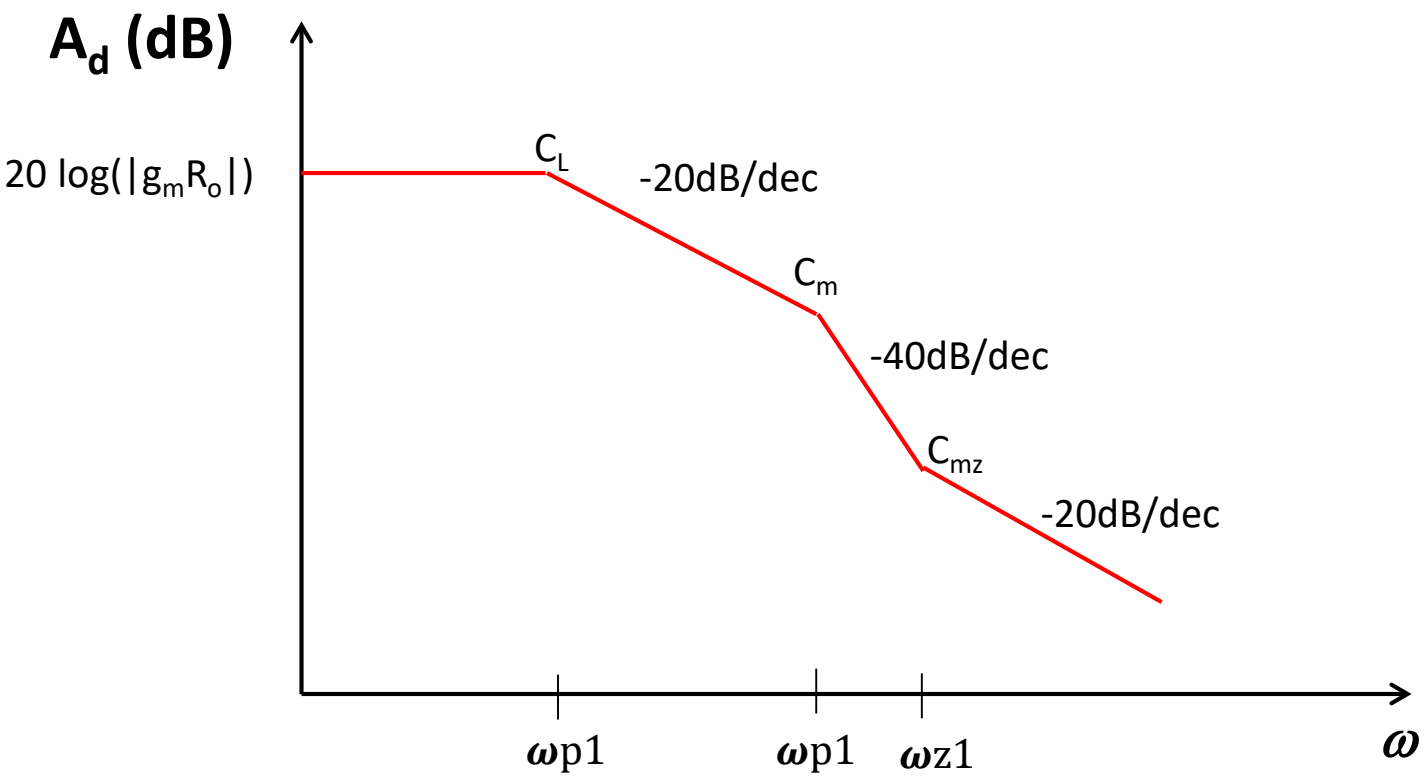




Oxford University Publishing
Microelectronic Circuits by Adel S. Sedra and Kenneth C. Smith (0195323033)