Unit #2
Chapter #16 & 17:
Digital Logic Circuits

335 → Digital → 425, 525
→ Analog → 433

from **Microelectronic Circuits** Text

by Sedra and Smith

Oxford Publishing

Introduction

- **IN THIS UNIT YOU WILL LEARN ABOUT**
  - The structure, operation, and synthesis of CMOS logic
    - 16.1
  - The voltage transfer characteristic (VTC) of the CMOS inverter
    - 16.2, 16.3
  - Dynamic operation of the CMOS inverter
    - 17.1
  - Transistor sizing and power dissipation
    - 17.2, 17.3

Unit #2
Chapter #16.1: CMOS Logic-Gate Circuits (1)
Lecture 5

from **Microelectronic Circuits** Text
by Sedra and Smith
Oxford Publishing

16.1.1 **Switch-Level Transistor Model**

- For CMOS digital circuits utilize NMOS and PMOS transistors as switches
- This means we will mostly, but not always consider them in one of two states: cutoff (open) or linear or "deep" triode (closed)
- For NMOS, when $V_G = V_{DD}$ the transistor operates in linear so is acts like a resistor ($r_{DS} = R_{on}$) and when $V_G = 0V$ the transistor is an open switch
- For PMOS, when $V_G = 0V$ the transistor operates in linear so is acts like a resistor ($r_{DS} = R_{on}$) and when $V_G = V_{DD}$ the transistor is an open switch

NMOS

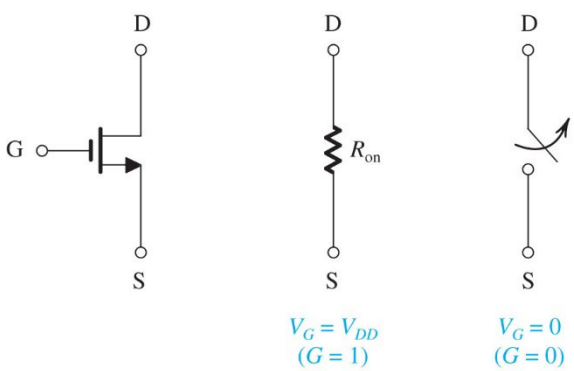

PMOS

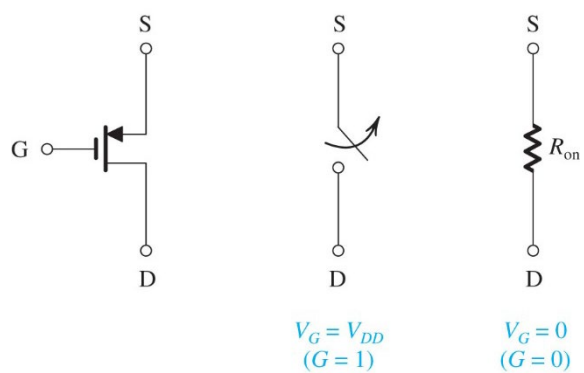

16.1.2 **The CMOS Inverter**

- Fig. (a) is a block (gate level) representation of the CMOS inverter and (b) is its CMOS realization

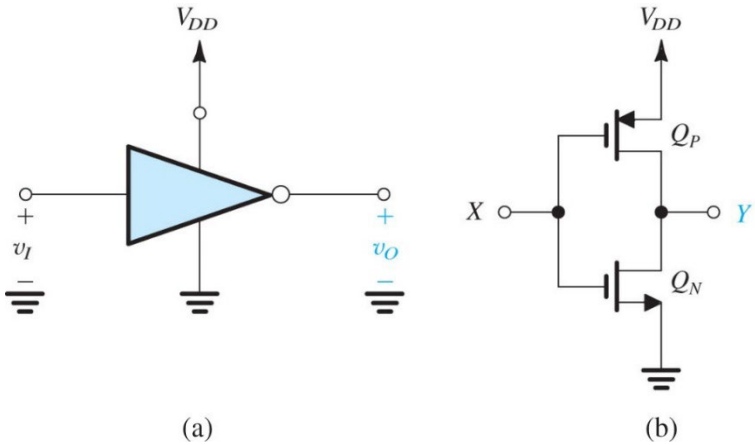

- Boolean Expression: $Y = \overline{X}$

- Input X = 1 (or $v_I = V_{DD}$), PMOS is off and NMOS is linear, creates DC path to ground and ideally output Y = 0 (or v_O = 0V)

- Input X = 0 (or v_I = 0V), PMOS is linear and NMOS is off, creates DC path to V_{DD} and ideally output Y = 1 (or $v_O = V_{DD}$)

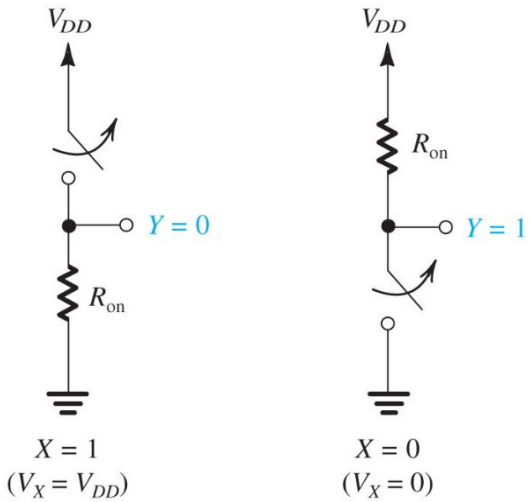

16.1.3 **General CMOS Logic Structure**

- Inverter consists of an NMOS pull-down transistor and a PMOS pull-up transistor

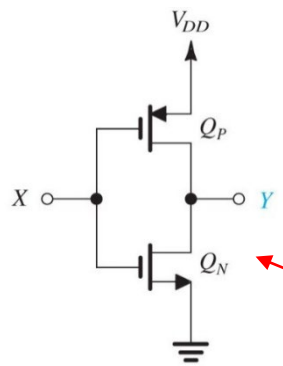

CMOS Inverter

- In general, a CMOS logic gate consists of a pull-up network (PUN) constructed with PMOS transistors

- … and a pull-down network (PDN) constructed with NMOS transistors

3-input CMOS logic gate

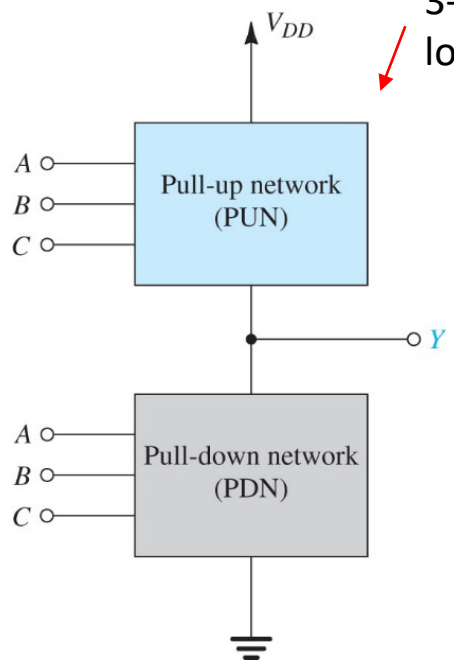

16.1.3 **Dual Networks & DeMorgan Laws**

- The pull-up and pull-down networks are dual networks

- Pull-up network (PUN)
  - Tie output to V_{DD} when it conducts
  - No conduction when output is 0V

- Pull-down network (PDN)
  - No conduction when output is VDD
  - Tie output to 0 when it conducts

- Dual (complementary) networks are circuit representations of the equivalences expressed by DeMorgan's Laws, for example

NOR Function

Not (A or B) $\underbrace{\overline{A+B}}_{\text{PDN}} \equiv \underbrace{\overline{A}\,\overline{B}}_{\text{PUN}}$ Not(A) and Not(B)

NAND Function

Not (A and B) $\underbrace{\overline{AB}}_{\text{PDN}} \equiv \underbrace{\overline{A}+\overline{B}}_{\text{PUN}}$ Not(A) or Not(B)

16.1.3 **Examples**

- Pull-down networks
- Pull-up networks

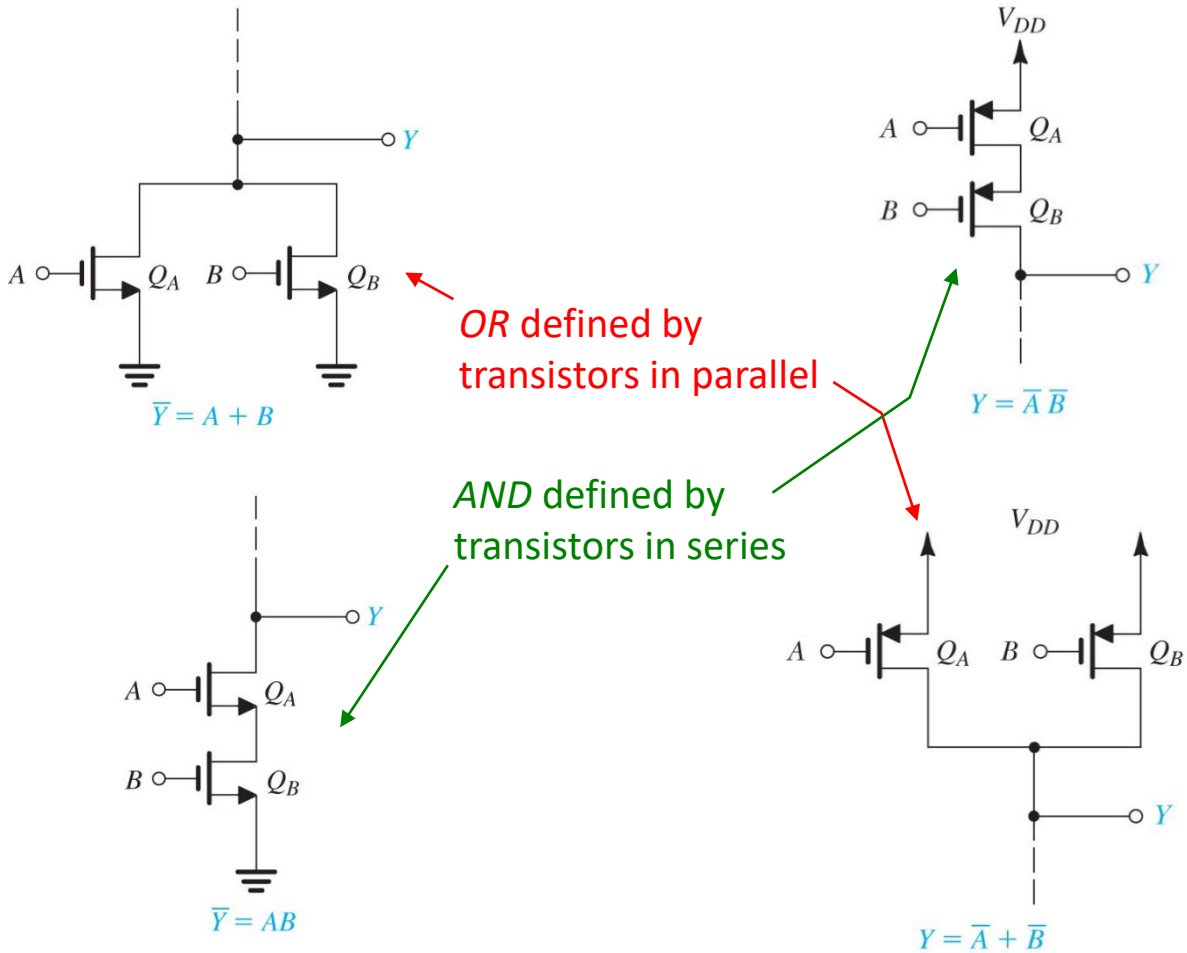

OR defined by transistors in parallel

AND defined by transistors in series