Unit #2
Chapter #16.1: CMOS Logic-Gate Circuits (2)
Lecture 6

from **Microelectronic Circuits** Text
by Sedra and Smith
Oxford Publishing

16.1.4 **Synthesizing Two-Input NOR Gate**

- 2-input NOR function

$$Y = \overline{A+B} \quad = \overline{A}\,\overline{B}$$

- PMOS PUN activated with low inputs in series to create a high output

$$Y = \quad \overline{A}\,\overline{B}$$

- NMOS PDN activated with high inputs in parallel to create a low output

$$\overline{Y} = A + B$$

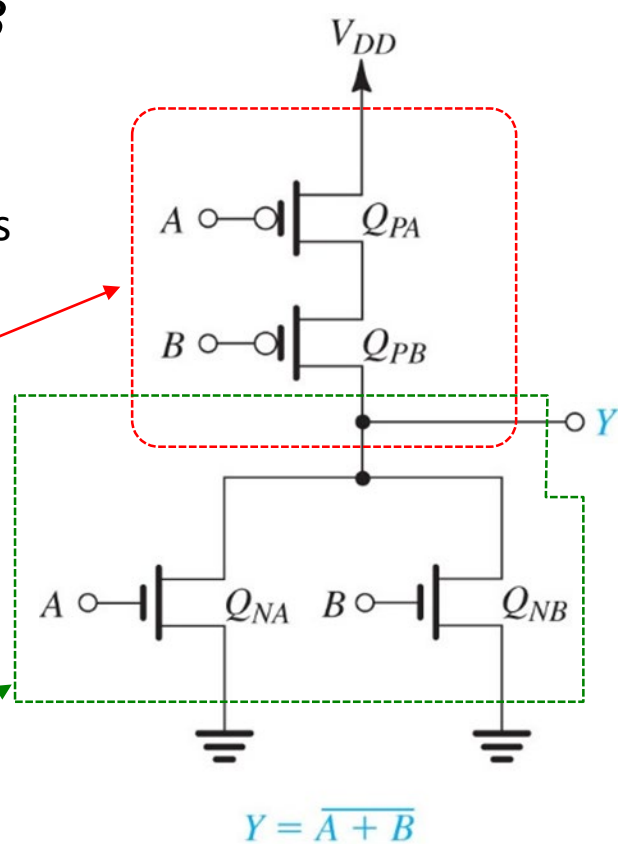

16.1.5 **Synthesizing Two-Input NAND Gate**

- 2-input NAND function

$$Y = \overline{AB} \quad = \overline{A} + \overline{B}$$

- PMOS PUN activated with low parallel inputs to create a high output

$$Y = \quad \overline{A} + \overline{B}$$

- NMOS PDN activated with high series inputs to create a low output

$$\overline{Y} = AB$$

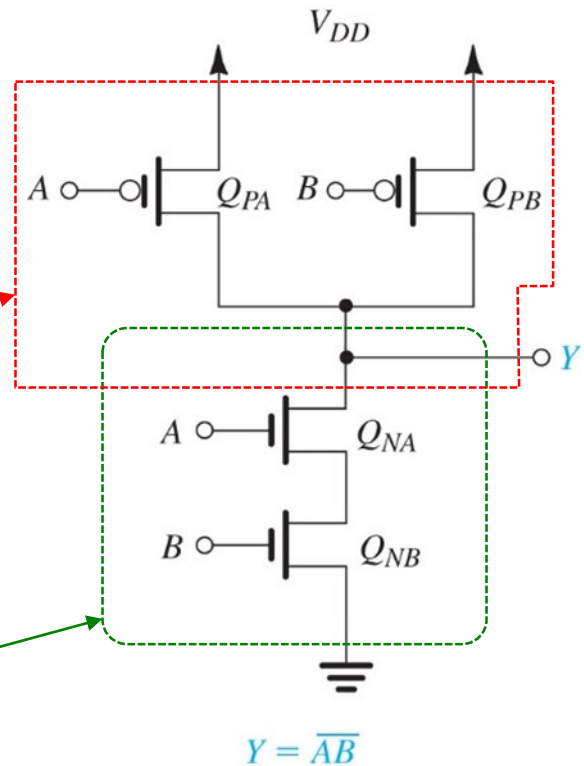

16.1.6 **Synthesizing a Complex Gate**

- Consider a more complex function

$$Y = \overline{A(B + CD)}$$

- Here the PDN is readily expressed as

$$\overline{Y} = A(B + CD)$$

- To get the PUN we derive using DeMorgan laws

$$\begin{aligned} Y &= \overline{A(B + CD)} \\ &= \overline{A} + \overline{B + CD} \\ &= \overline{A} + \overline{B}\,\overline{CD} \\ &= \overline{A} + \overline{B}(\overline{C} + \overline{D}) \end{aligned}$$

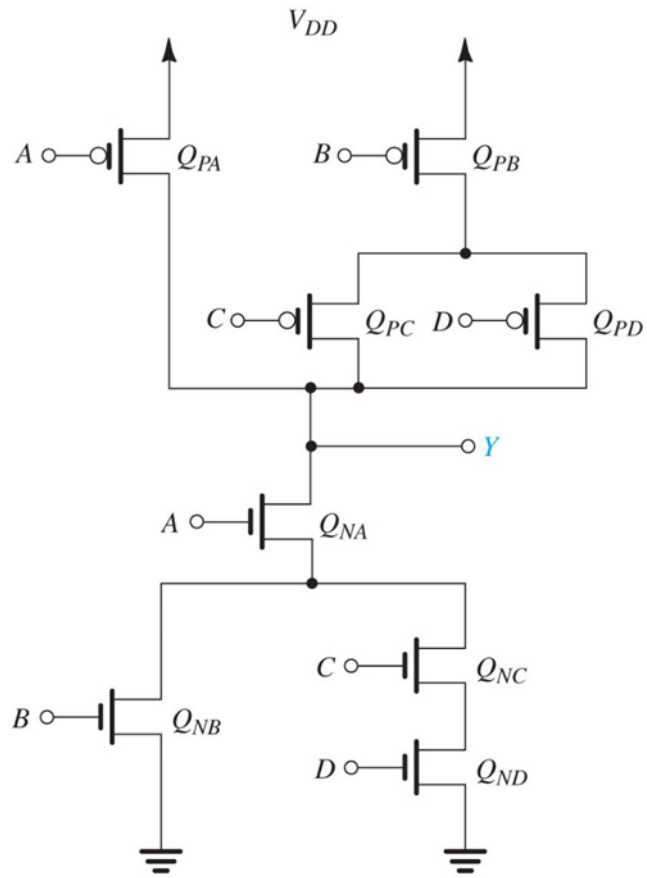

$Y = \overline{A(B + CD)}$

16.1.9 **Summary of Synthesis Method for Complementary Functions**

1. For a complementary function, design the PDN first to realize complemented output ($\overline{Y}$) with un-complemented inputs (A, B, …)

2. Derive PUN with DeMorgan laws to get un-complemented output (Y) as a function of complemented inputs ($\overline{A}$, $\overline{B}$, $\overline{\ldots}$)

16.1.8 **The Exclusive OR**

- An important function used in logic design, especially for arithmetic logic like addition function is the Exclusive-OR of XOR

Note: the XOR is NOT a true complementary function since the inputs are mixed

$$Y = A \oplus B = (A + B)(\overline{A} + \overline{B})$$

A	B	Out
0	0	0
0	1	1
1	0	1
1	1	0

http://hyperphysics.phy-astr.gsu.edu/

16.1.8 **Synthesizing the Exclusive OR**

- The logic for the XOR *is* $Y = (A+B)(\overline{A}+\overline{B})$

The XOR requires both complemented and un-complemented inputs

- We can derive the PDN as follows

$$\overline{Y} = \overline{(A+B)(\overline{A}+\overline{B})}$$
$$= \overline{(A+B)} + \overline{(\overline{A}+\overline{B})}$$
$$= \overline{A}\,\overline{B} + \overline{\overline{A}}\,\overline{\overline{B}} = \overline{A}\,\overline{B} + AB$$

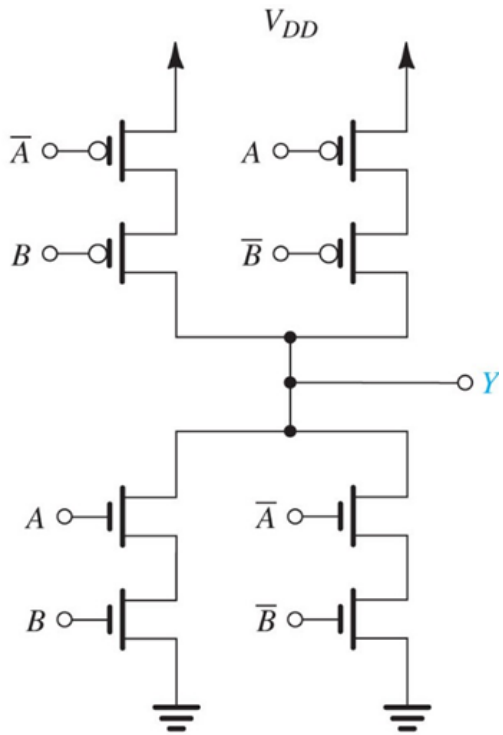

- … so the PUN can be expressed as

$$Y = \overline{\overline{A}\,\overline{B} + AB}$$
$$= \overline{(\overline{A}\,\overline{B})}\,\overline{(AB)}$$
$$= (\overline{\overline{A}} + \overline{\overline{B}})(\overline{A}+\overline{B})$$
$$= A\overline{A} + \overline{A}B + A\overline{B} + B\overline{B} = \overline{A}B + A\overline{B}$$

Example 16.1

Synthesize a CMOS logic circuit that implements the Boolean function

$$Y = \overline{A + B(C + D)}$$

Problem 16.2

A CMOS invert has a $k_n' = 500\ uA/V^2$, $k_p' = 125\ uA/V^2$, $V_{tn} = -V_{tp} = 0.4V$, and $V_{DD} = 1.2V$ The NMOS have a W/L = 1.5

a) What must the PMOS W/L be in order have R_{on} the same for both transistors?

b) What is the value of R_{on} in this case?

Design a CMOS Adder

Addition is one of the key operations that can be realized with CMOS logic. To do this we use XORs

Design a CMOS Adder