Unit #2
Chapter #16.1: CMOS Logic-Gate Circuits (2)
Lecture 6

from **Microelectronic Circuits** Text
by Sedra and Smith
Oxford Publishing

Example 16.1

$\Rightarrow \overline{A+B} \equiv \bar{A}\bar{B}$

$\Rightarrow \overline{AB} \equiv \bar{A}+\bar{B}$

Synthesize a CMOS logic circuit that implements the Boolean function

Start w/ PDN

$$Y = \overline{A + B(C+D)}$$

$\overline{A + B(C+D)}$

$\bar{A}\ \overline{B(C+D)}$

$\bar{A}\left(\bar{B} + \left(\overline{C+D}\right)\right)$

$\bar{A}\left(\bar{B} + \bar{C}\bar{D}\right)$

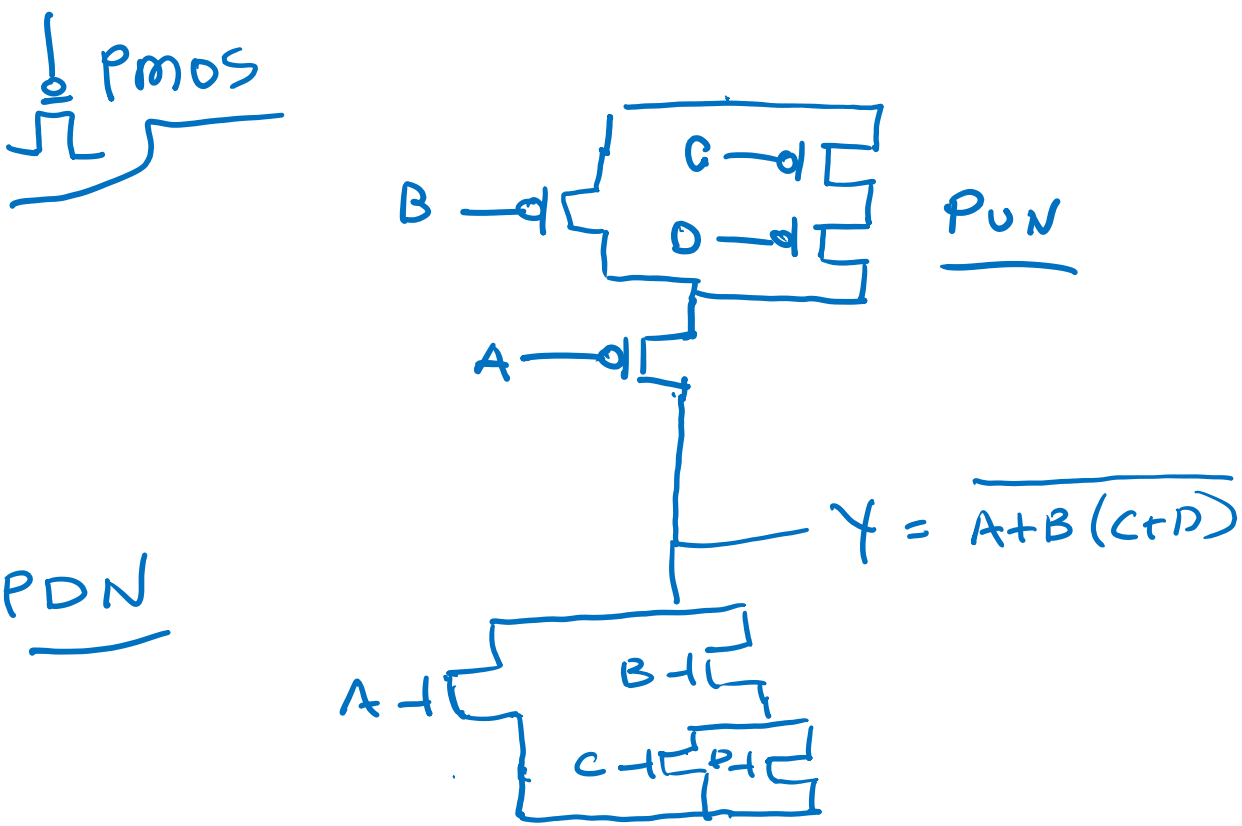

$V_{ovn} = V_{DD} - V_{tn} = 1.2 - 0.4V = 0.8$

Problem 16.2

$V_{ovp} = V_{DD} - |V_{tp}| = 1.2 - 0.4V = 0.8$

A CMOS inverter has a $k_n' = 500\ uA/V^2$, $k_p' = 125\ uA/V^2$, $V_{tn} = -V_{tp} = 0.4V$, and $V_{DD} = 1.2V$ The NMOS have a W/L = 1.5

a) What must the PMOS W/L be in order have R_{on} the same for both transistors?

$R_{on} = r_{DS} = \frac{1}{k_p V_{ovp}} = \frac{1}{k_n V_{ovn}}$ $\quad k_p = k_n$

$\hookrightarrow \left(\frac{W}{L}\right)_p k_p' = \left(\frac{W}{L}\right)_n k_n'$

b) What is the value of R_{on} in this case?

$R_{on} = \frac{1}{k_n'\left(\frac{W}{L}\right) V_{ov}}$ $\quad V_{ov} = 1.2 - 0.4 = 0.8V$

$= \frac{1}{500\frac{\mu A}{V^2}(1.5)(0.8V)} = 1.67K\Omega$

$\left(\frac{W}{L}\right)_p = \frac{k_n'}{k_p'}\left(\frac{W}{L}\right)_n = \frac{500\frac{\mu A}{V}}{125\frac{\mu A}{V}}(1.5) = 6$