Unit #2
Chapter #16.2: Digital Logic Inverters
Lecture 7

from **Microelectronic Circuits** Text
by Sedra and Smith
Oxford Publishing

Example 16.2a

For the simple NMOS inverter, derive expressions for V_{OH}, V_{OL}, V_{IL}, V_{IH}, and V_M. Neglect λ and show parameters can be expressed in terms of V_{DD}, V_t, and $k_nR_D=1/V_x$

$\boxed{V_{OL}}$

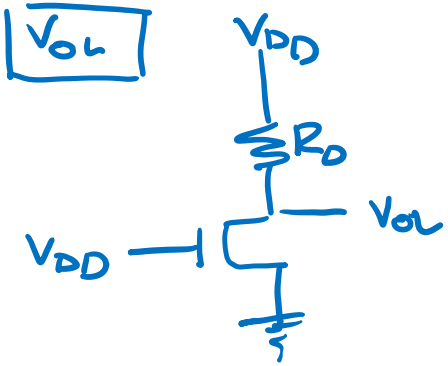

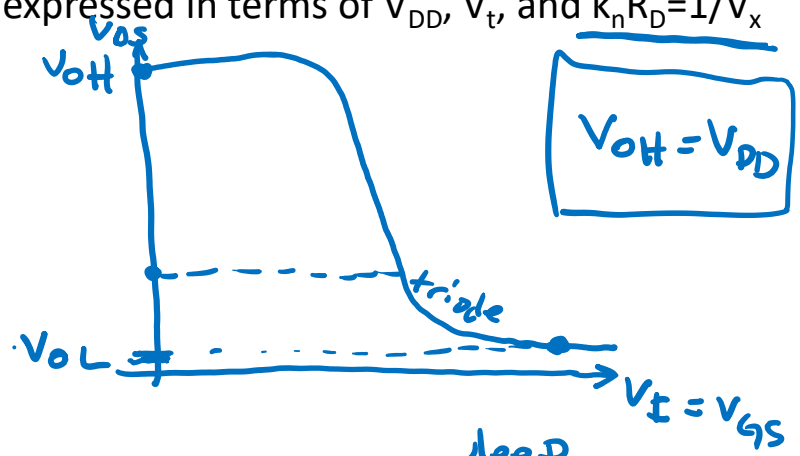

$\boxed{V_{OH}=V_{DD}}$

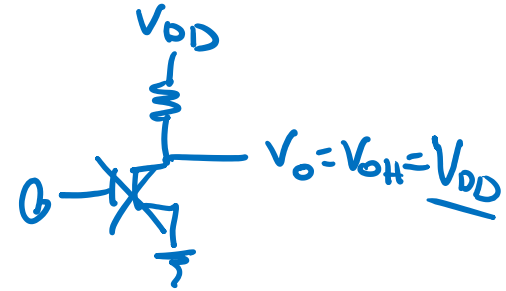

$V_I = V_{GS} = V_{DD}$

$V_{DS} \ll V_{GS}-V_t$ — deep triode

$$i_D = \frac{V_{DD}-V_{OL}}{R_D} = K_n\left[(V_{DD}-V_t)V_{OL} - \frac{V_{OL}^2}{2}\right] \rightarrow \text{linear}$$

assume

$$\frac{V_{DD}-V_{OL}}{R_D} = K_n(V_{DD}-V_t)V_{OL}$$

$$V_{DD}-V_{OL} = \frac{1}{V_x}(V_{DD}-V_t)V_{OL}$$

$$\frac{V_{DD}-V_{OL}}{V_{OL}} = \frac{V_{DD}-V_t}{V_x}$$

$$\boxed{V_{OL} = \frac{V_{DD}}{1+\frac{V_{DD}-V_t}{V_x}}}$$

Example 16.2a Cont.

For the simple NMOS inverter, derive expressions for V_{OH}, V_{OL}, V_{IL}, V_{IH}, and V_M. Neglect λ and show parameters can be expressed in terms of V_{DD}, V_t, and $k_nR_D=1/V_x$

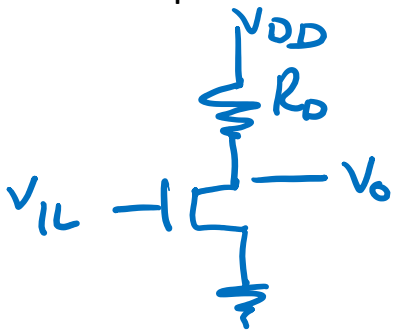

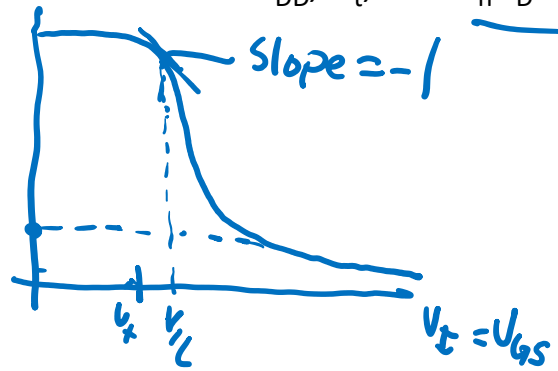

$$\frac{V_{DD}-V_O}{R_D} = \frac{k_n}{2}(V_I - V_t)^2$$

$$V_O = V_{DD} - \frac{1}{2V_x}(V_I - V_t)^2$$

$$\frac{dV_O}{dV_I} = -\frac{1}{V_x}(V_{IL} - V_t) = -1$$

$$\boxed{V_{IL} = V_t + V_x}$$

Example 16.2a Cont.

For the simple NMOS inverter, derive expressions for V_{OH}, V_{OL}, V_{IL}, V_{IH}, and V_M. Neglect λ and show parameters can be expressed in terms of V_{DD}, V_t, and $k_nR_D=1/V_x$

$V_M = V_O = V_I$

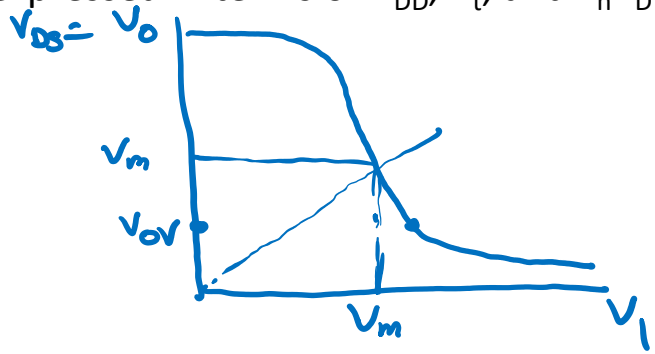

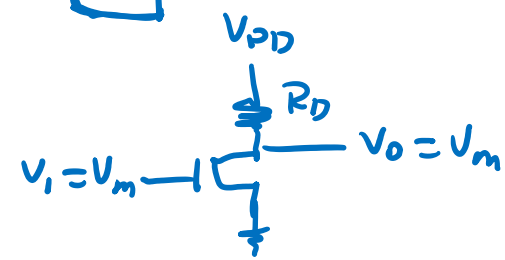

op region sat

$V_{DS} > V_{ov}$

$$\frac{V_{DD} - V_m}{R_D} = \frac{k_n}{2}(V_m - V_t)^2$$

$$V_{DD} - V_m = \frac{1}{2V_x}(V_m - V_t)^2$$

$$2V_x(V_{DD} - V_m) = V_m^2 - 2V_mV_t + V_t^2$$

$$V_m^2 - 2V_mV_t + 2V_mV_x + (V_t^2 - 2V_{DD}V_x) = 0$$

$$\underbrace{V_m^2}_{a} + \underbrace{(2V_x - 2V_t)}_{b}V_m + \underbrace{(V_t^2 - 2V_{DD}V_x)}_{c} = 0$$

$$V_m = \frac{-b \pm \sqrt{b^2 - 4ac}}{2a}$$

$$\boxed{V_m = V_t - V_x + \sqrt{2(V_{DD} - V_t)V_x + V_x^2}}$$

Example 16.2a Cont.

For the simple NMOS inverter, derive expressions for V_{OH}, V_{OL}, V_{IL}, $\boxed{V_{IH}}$, and V_M. Neglect λ and show parameters can be expressed in terms of V_{DD}, V_t, and $k_nR_D=1/V_x$

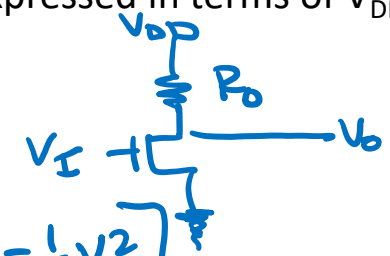

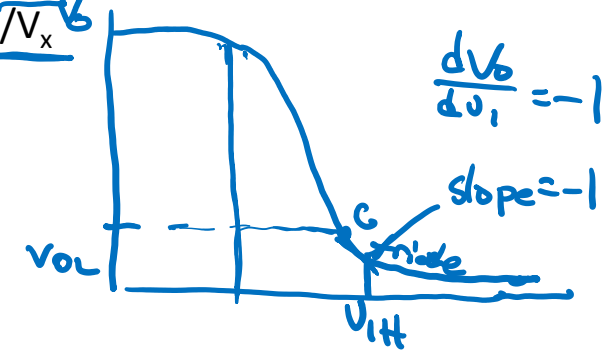

$$\frac{V_{DD}-V_o}{R_D} = k_n\left[(V_I-V_t)V_o - \frac{1}{2}V_o^2\right]$$

$$V_{DD}-V_o = \frac{1}{V_x}\left[(V_1-V_t)V_o - \frac{1}{2}V_o^2\right]$$

$$V_o = V_{DD} - \frac{1}{V_x}\left[(V_1-V_t)V_o - \frac{1}{2}V_o^2\right]$$

$$\frac{dV_o}{dV_1} = -\frac{1}{V_x}\left[(V_{IH}-V_t)\frac{dV_o}{dV_1} + V_o - V_o\frac{dV_o}{dV_1}\right]$$

$$-1 = -\frac{1}{V_x}\left[(V_{IH}-V_t) + 2V_o\right]$$

$$V_{IH} = 2V_o - V_x + V_t$$

$$V_o\Big|_{V_1=V_{IH}} = 0.816\sqrt{V_{DD}V_x}$$

$$\boxed{V_{IH} = V_t + 1.63\sqrt{V_{DD}V_x} - V_x}$$

Example 16.2c

Find numerical values for all parameters assuming V_{DD}=1.0V, V_t=0.35V, V_x = 0.0225V.

$V_{OH} = 1.0V$

$V_{OL} = 33mV$

$V_{IL} = 0.37V$

$V_{IH} = 0.57V$

$V_m = 0.5V$

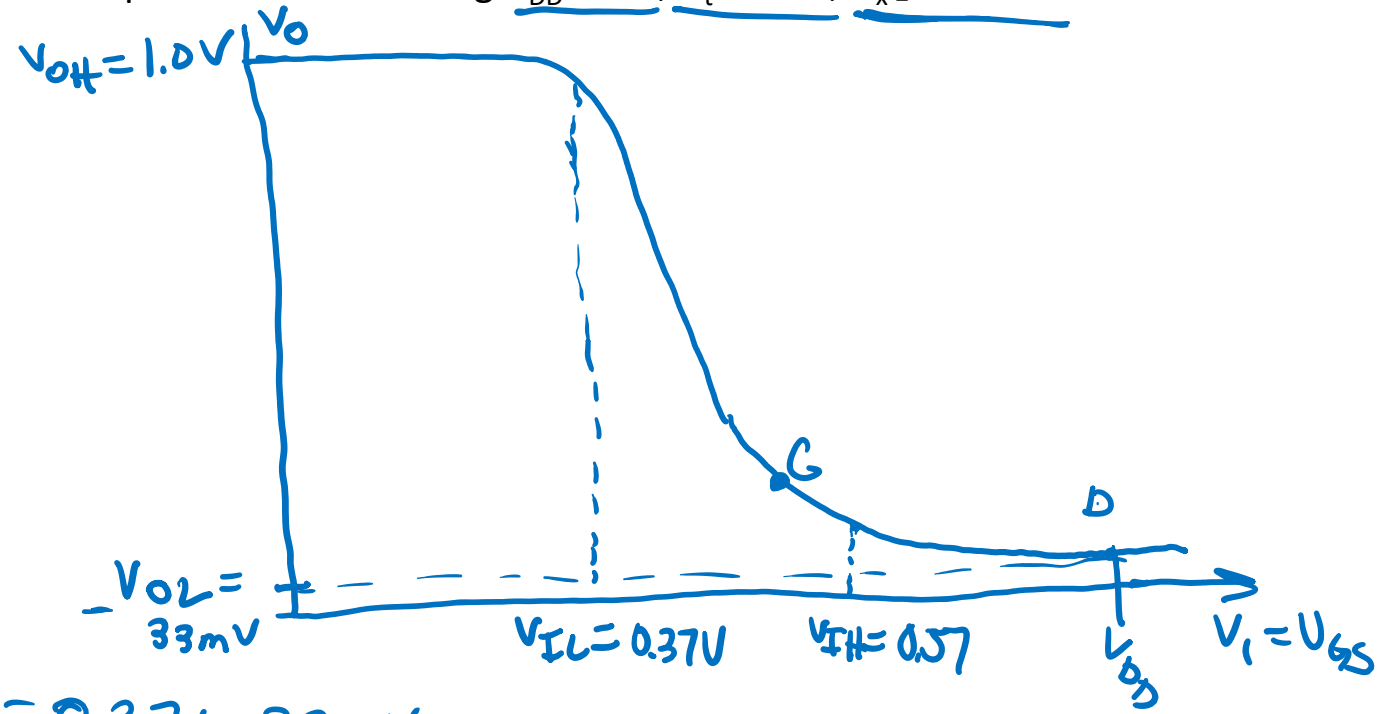

$NM_L = V_{IL} - V_{OL} = 0.37V - 33mV = 0.34V$

$NM_H = V_{OH} - V_{IH} = 1.0 - 0.57V = 0.43V$

Example 16.2d

For $k_n' = 540uA/V^2$ and W/L = 1.5, find the required value of R_D and use it to determine the average power dissipated in the inverter, assuming that the inverter spends half of the time in each of its two states. Use V_{DD} = 1.0V, V_x = 0.0225V and V_{OL} = 33 mV.

$$\frac{1}{V_x} = k_n R_D \Rightarrow \frac{1}{V_x k_n' \frac{W}{L}} = \frac{1}{(0.0225V)\left(540\frac{\mu A}{V^2}\right)(1.5)} \cong 54.9k\Omega$$

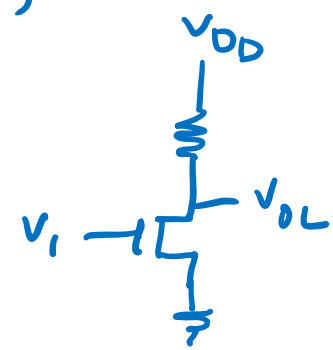

$$I_L = \frac{V_{DD} - V_{OL}}{R_D} = \frac{1.0 - 0.033}{54.9k} = 18\mu A$$

$$P_L = V_{DD} I_D = 1.0(18\mu A) \quad 18\mu W$$

$$P_{AV} = \frac{P_L}{2} \cong 9\mu W$$

1B transistors $\longrightarrow$ 9kW

Why we don't use NMOS