Unit #2
Chapter #16.3: The CMOS Inverter
Lecture 8

from **Microelectronic Circuits** Text
by Sedra and Smith
Oxford Publishing

16.3.1 **Circuit Operation**

Advantages **over** the simple NMOS

- Zero static power
- Wider noise margins
- Faster switching speed (lower propagation delay)

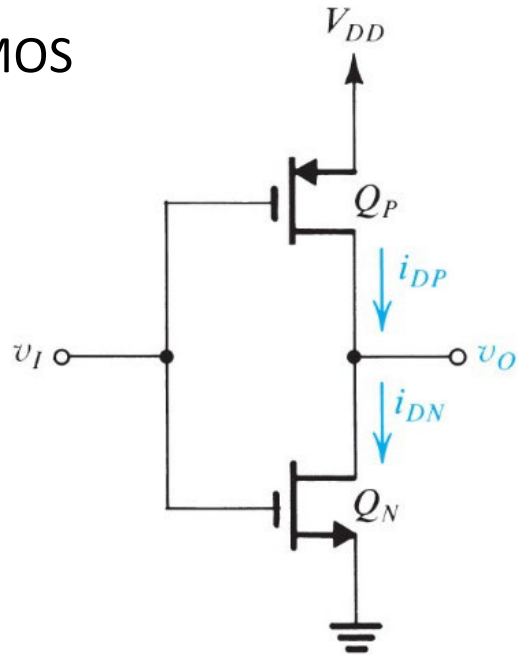

16.3.1 **Load Line (input high)**

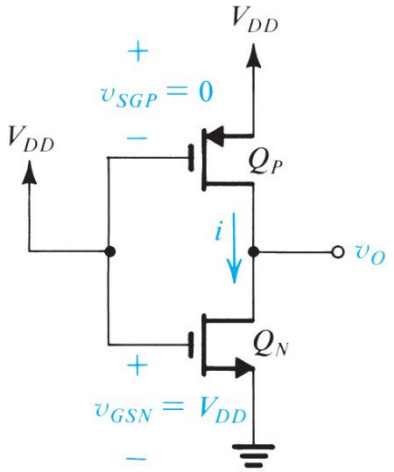

(a)

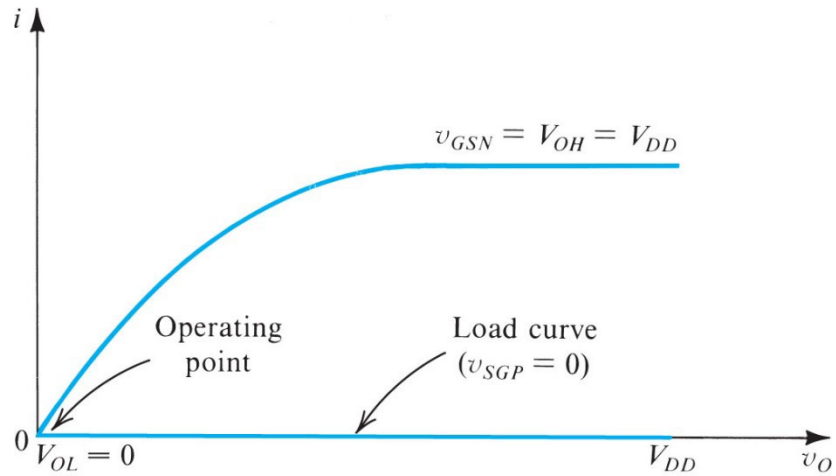

(b)

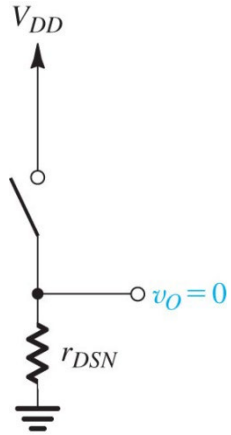

(c)

$$r_{DSN} = 1 \Big/ \left[k_n' \left(\frac{W}{L} \right)_n (V_{DD} - V_{tn}) \right]$$

16.3.1 **Load Line (input low)**

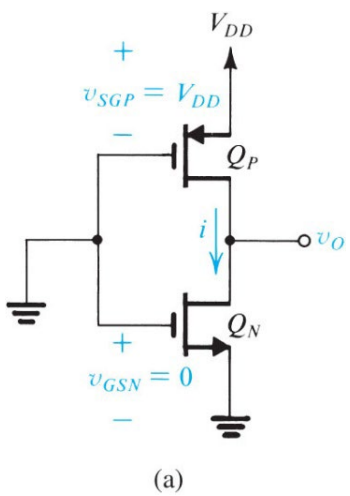

(a)

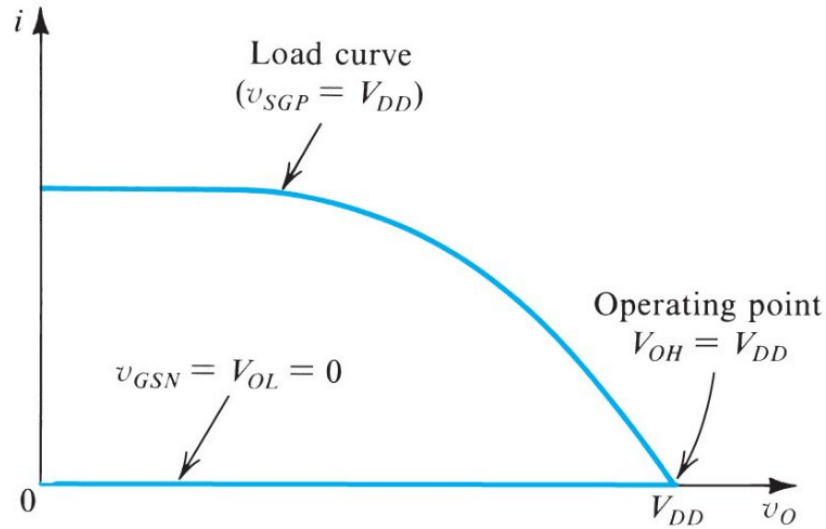

(b)

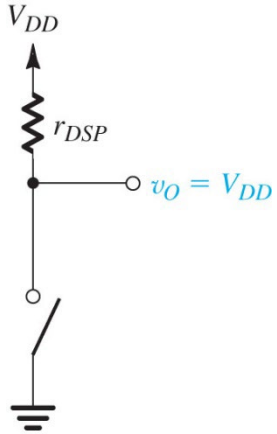

(c)

$$r_{DSP} = 1 \Big/ \left[k_p' \left(\frac{W}{L} \right)_p \left(V_{DD} - \left| V_{tp} \right| \right) \right]$$

16.3.2 **Matching NMOS to PMOS**

Typically for the CMOS inverter we want the NMOS and PMOS to be matched

$$V_{tn} = \left|V_{tp}\right| = V_t$$

$$k_n'\left(\frac{W}{L}\right)_n = k_p'\left(\frac{W}{L}\right)_p$$

since

$$L_n = L_p = L_{\min}$$

we will want

$$\frac{W_p}{W_n} = \frac{\mu_n}{\mu_p} \text{ since } C_{ox} \text{ is also the same}$$

<u>Remember:</u>

kn' = u_n*Cox

kp' = u_p*Cox

16.3.2 **The VTC**

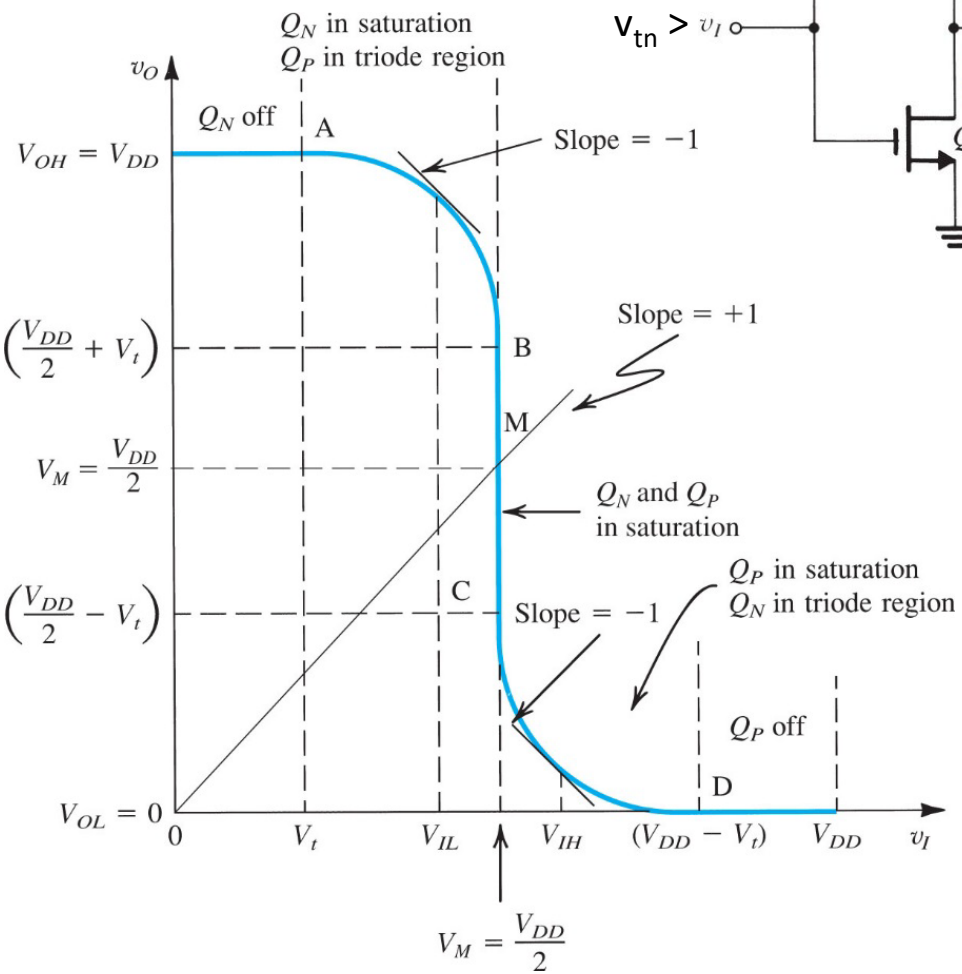

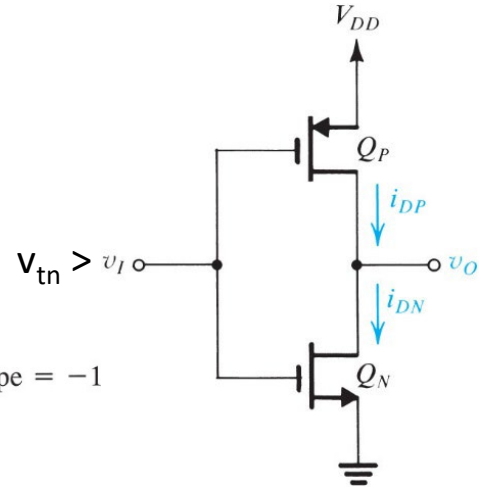

$v_{tn} > v_I$

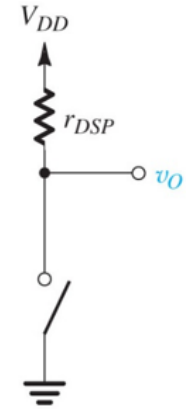

v_I up to (A)

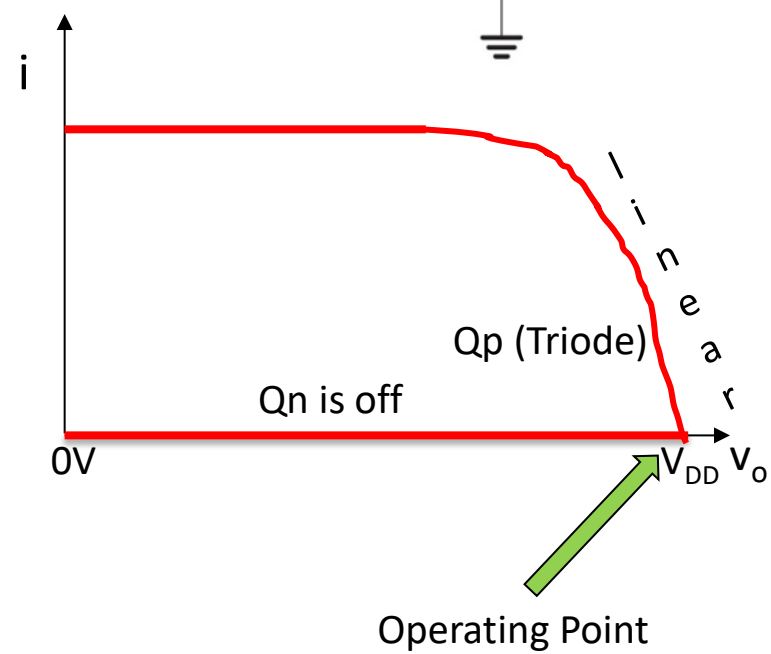

16.3.2 **The VTC**

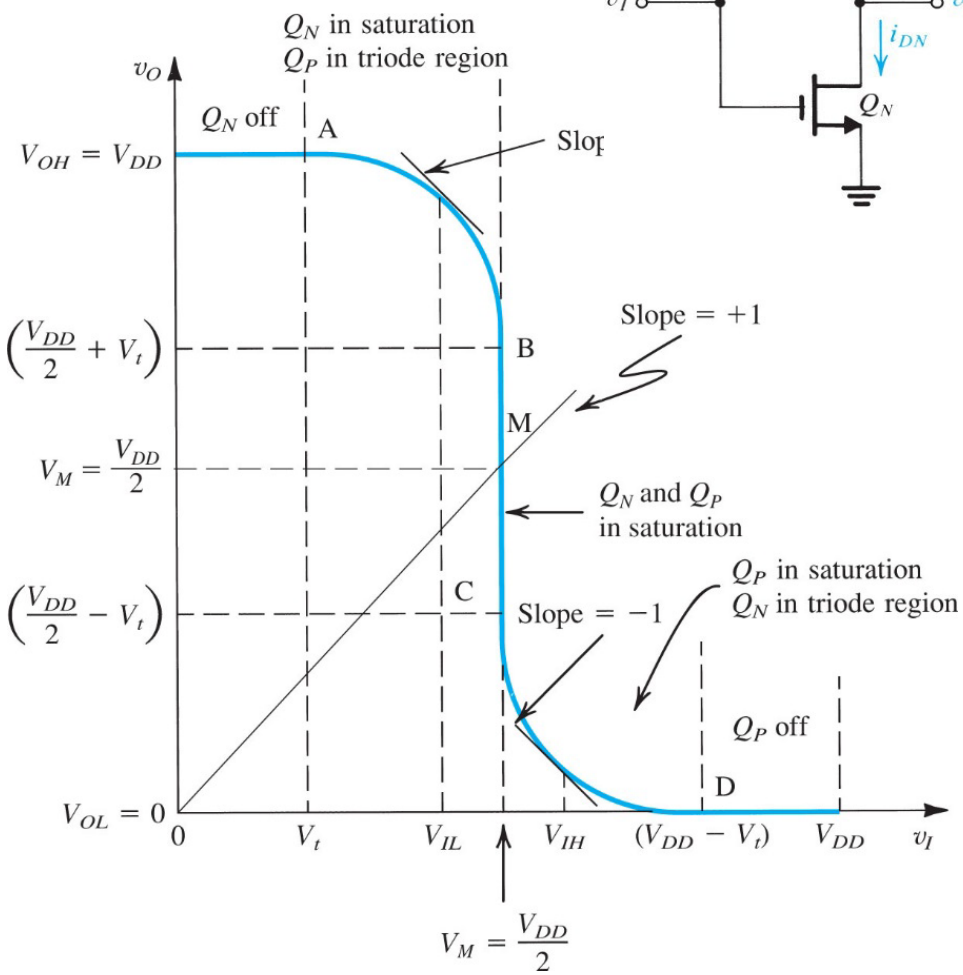

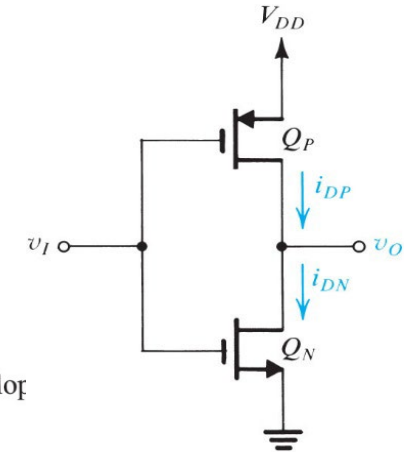

Between (A) and (B)

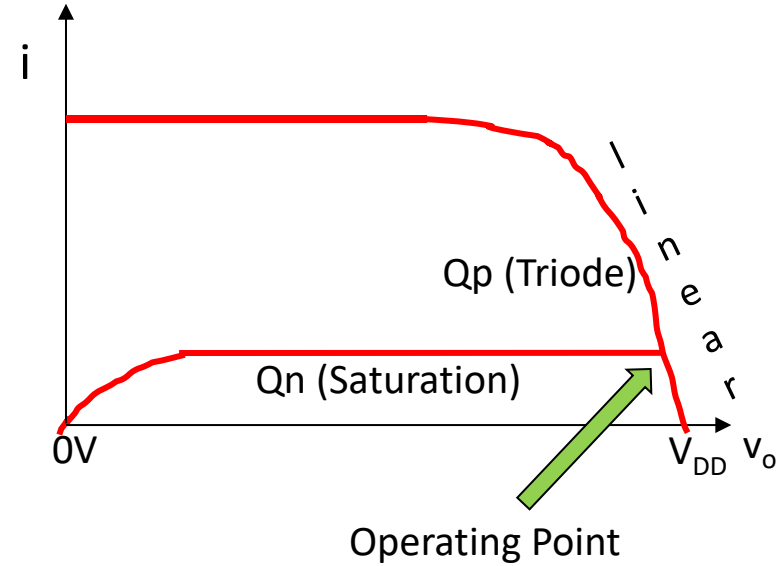

16.3.2 **The VTC**

Between (A) and (B)

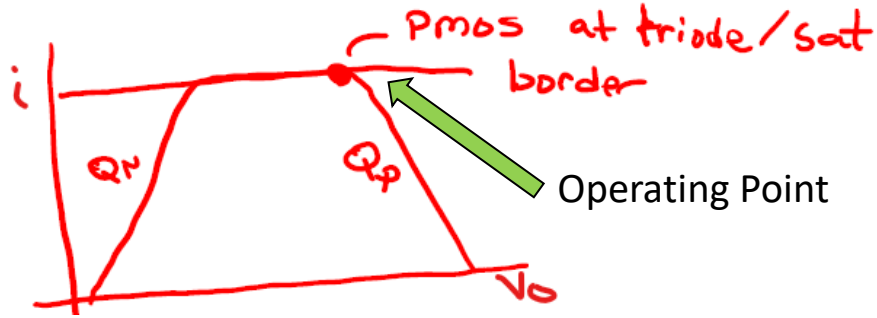

Q_P at triode/saturation border

$$i_{DP,\,triode} = k_P\left[\overbrace{(V_{SG}-|V_{tp}|)}^{V_{ov}}V_{SD} - \frac{1}{2}V_{SD}^2\right]$$

$$\underline{V_{SD} = V_{ov}}$$

$$= k_P\left[|V_{ov}|(|V_{ov}|) - \frac{1}{2}(|V_{ov}|)^2\right]$$

$$k_P\left[(|V_{ov}|)^2 - \frac{1}{2}(|V_{ov}|)^2\right]$$

$$= \frac{k_P}{2}|V_{ov}|^2$$

Midpoint – V_m

$$\underline{V_O = V_I = V_m}$$

Both Q_P, Q_N in sat

$$V_{tn} = -V_{tp} = \underline{V_t} \quad k_n = k_p = \underline{k}$$

$$i_{DPsat} = i_{DNsat}$$

$$\frac{k}{2}(V_{DD} - V_m - V_t)^2 = \frac{k}{2}(V_m - V_t)^2$$

$$V_m = \frac{V_{DD}}{2}$$ for <u>matched</u> CMOS inverter

Oxford University Publishing
Microelectronic Circuits by Adel S. Sedra and Kenneth C. Smith (0195323033)

16.3.2 **The VTC**

Between (C) and (D)

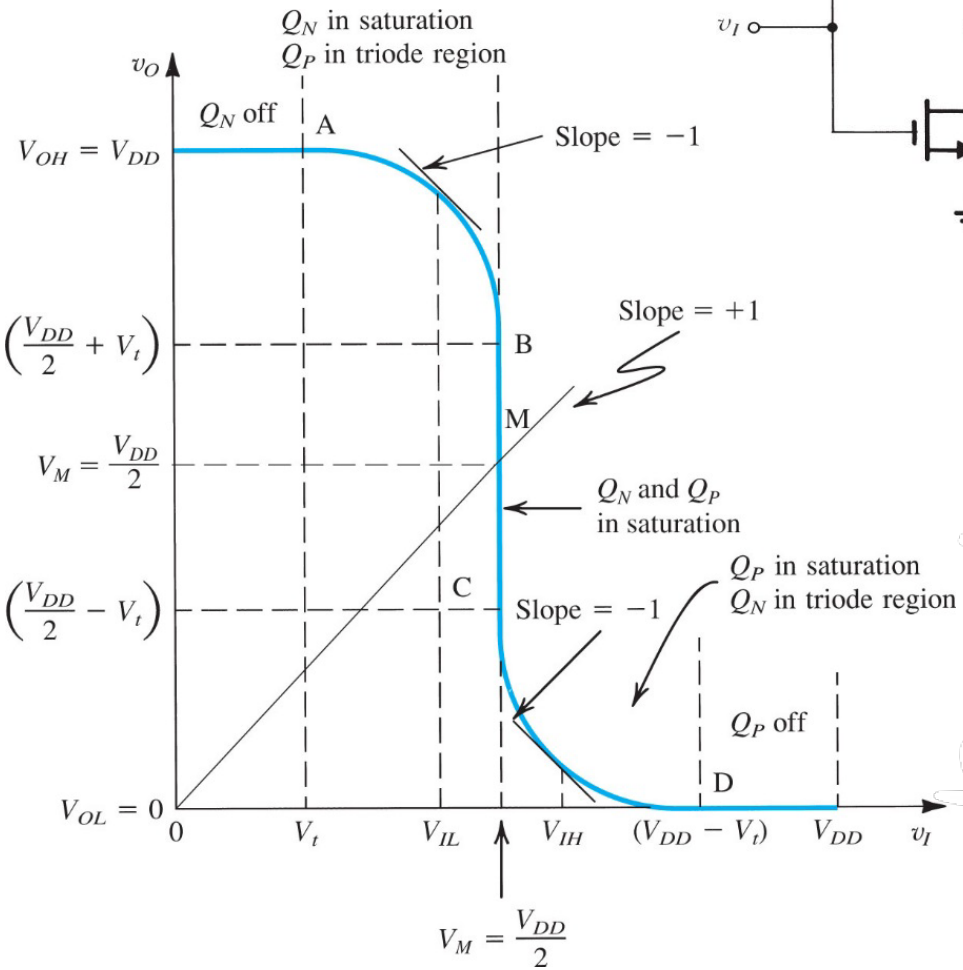

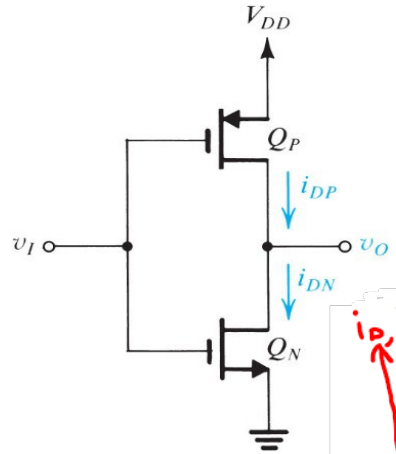

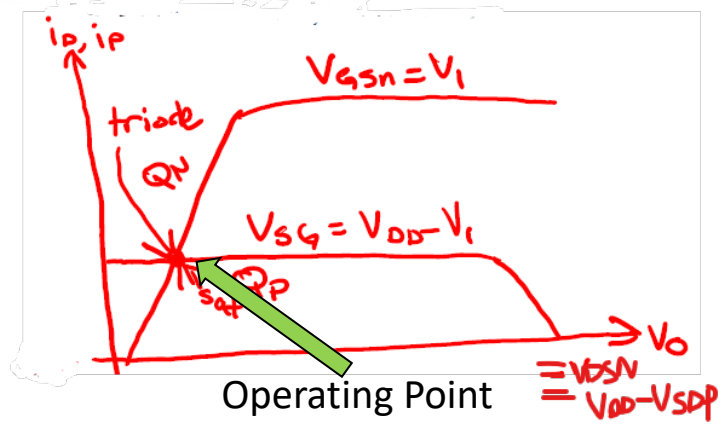

$$i_{DN,triode} = k\left[(V_I - V_t)V_O - \frac{1}{2}V_O^2\right]$$

$$i_{DP,sat} = \frac{k}{2}(V_{DD} - V_I - |V_t|)^2$$

$$i_{DN,triode} = i_{DP,sat}$$

solve for V_O vs V_I

Oxford University Publishing
Microelectronic Circuits by Adel S. Sedra and Kenneth C. Smith (0195323033)

16.3.2 **The VTC**

Between (C) and (D)

Q_N border of sat and triode

$$V_{DSN} = V_{GS} - V_t$$

$$V_{OC} = V_{IC} - V_t = \frac{V_{DD}}{2} - V_t$$

$$V_{IC} \rightarrow V_m$$

16.3.2 **The VTC**

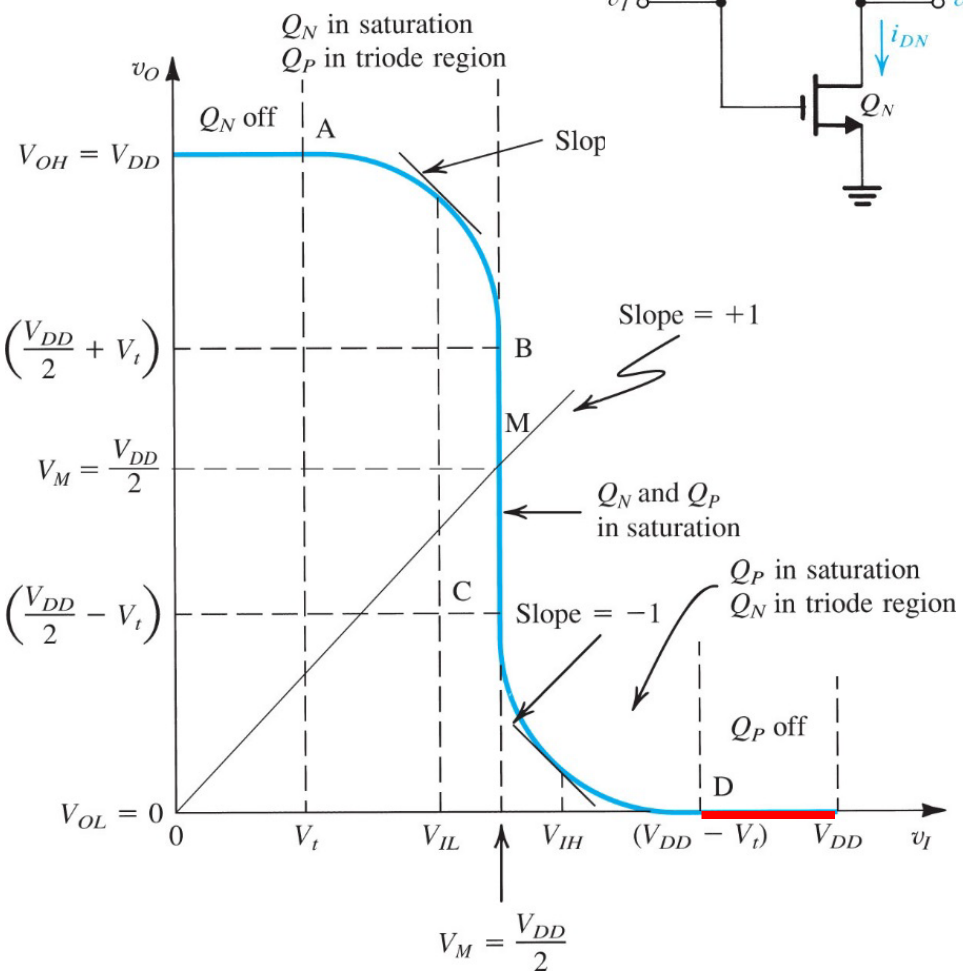

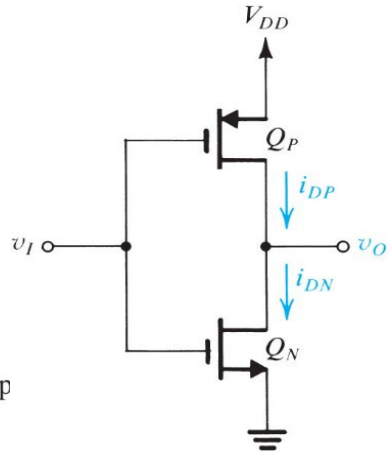

v_I above (D)

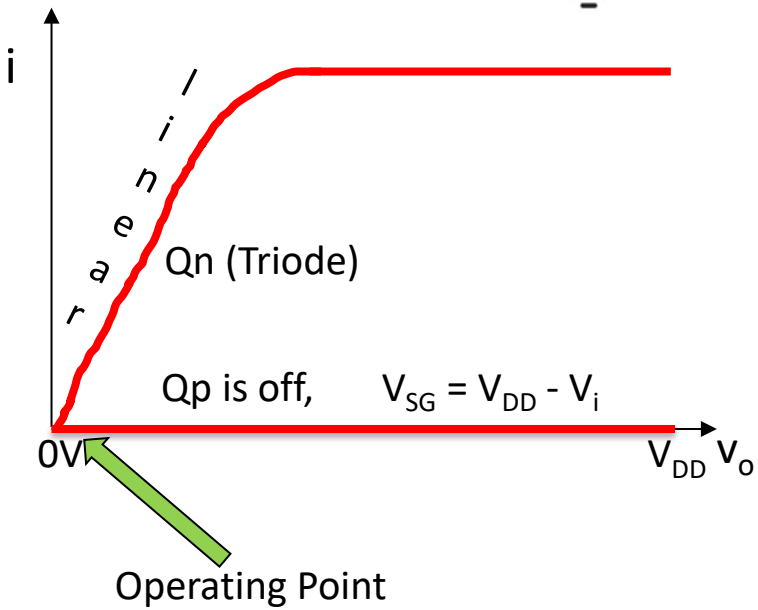

16.3.2 **The VTC**

Between (B) and (C)

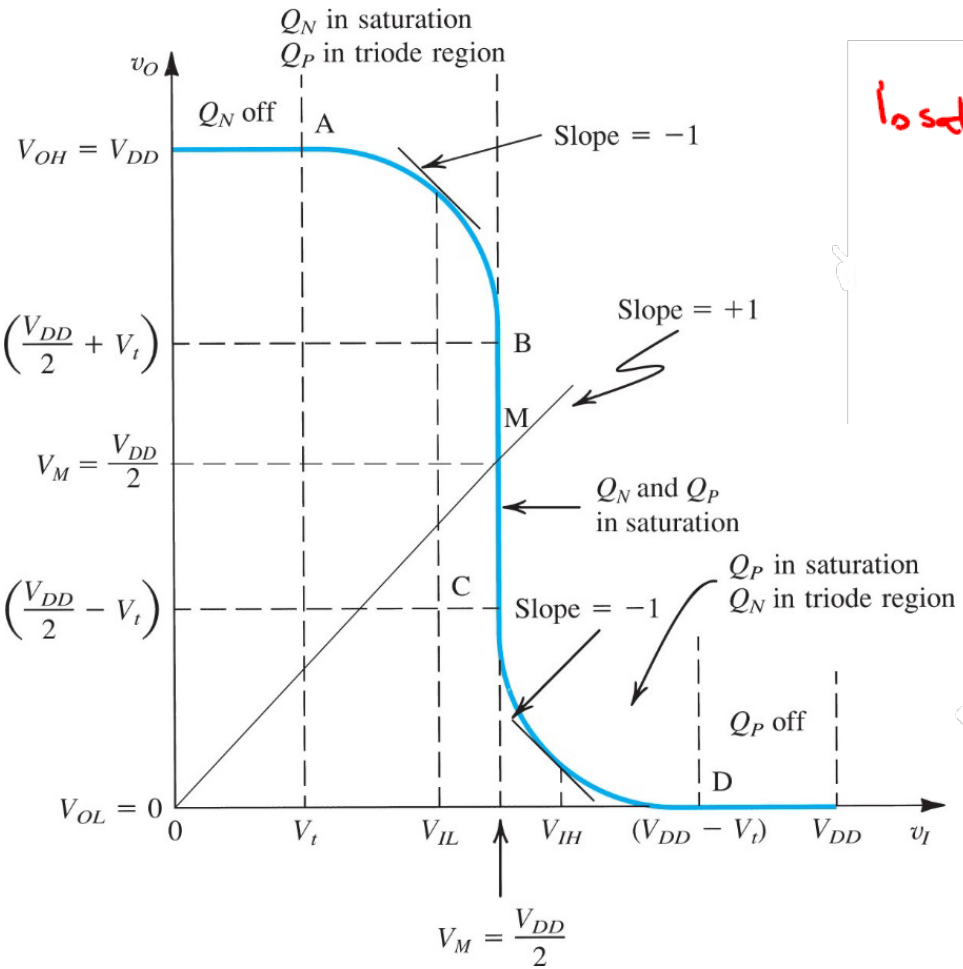

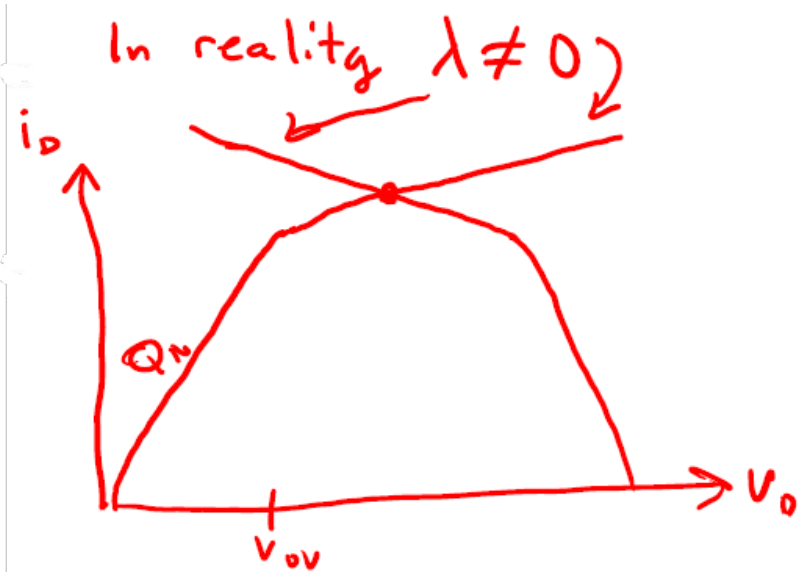

16.3.2 **Noise Margins**

- Recall

$$N_{ML} = V_{IL} - V_{OL}$$
$$N_{MH} = V_{OH} - V_{IH}$$

- We know for CMOS inverter

$$V_{OL} = 0V$$
$$V_{OH} = V_{DD}$$

- So all we need to do is get V_{IL} and V_{IH} at the slope = -1 V/V on the VTC

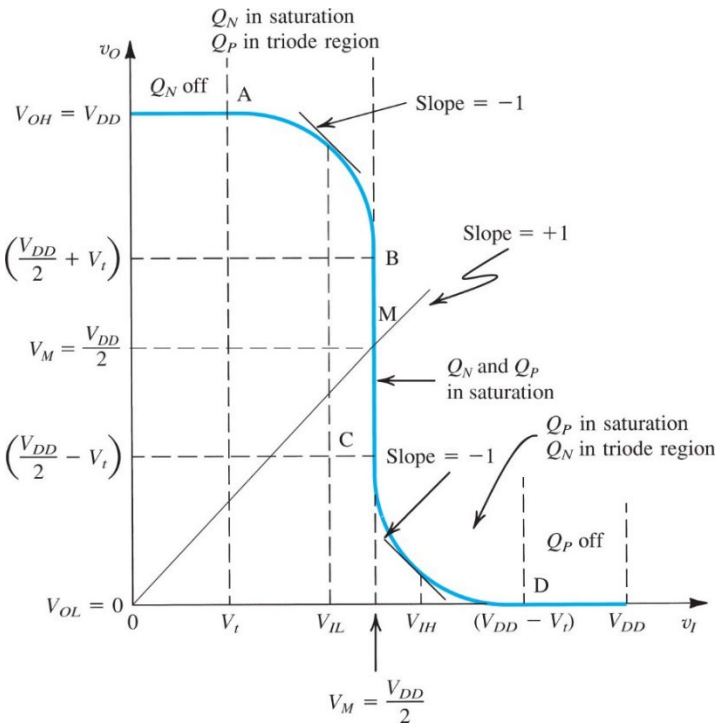

Note: since the transistors are matched the curve is symmetric across the slope = +1 line

16.3.2 **Deriving V_{IH} and V_{IL}**

$$V_{IL} = \frac{1}{8}(3V_{DD} + 2V_t)$$

$$V_{IH} = \frac{1}{8}(5V_{DD} - 2V_t)$$

How do we get this?

Assume Matched

$$i_{DN,\,triode} = I_{DP,sat}$$

$$\left[(V_I - V_t)V_o - \frac{V_o^2}{2}\right] = \frac{K}{2}(V_{DD} - V_I - V_t)^2$$

$$\frac{dv_o}{dv_I} = -1$$

$$(V_I - V_t)\frac{dv_o}{dv_I} + V_o - V_o\frac{dv_o}{dv_I} = -(V_{DD} - V_I - V_t)$$

$$-(V_{IH} - V_t) + V_o - (-V_o) = -(V_{DD} - V_{IH} - V_t)$$

$$-(V_{IH} - V_t) + 2V_o = -(V_{DD} - V_{IH} - V_t)$$

$$V_o = \frac{-V_{DD} + 2V_{IH}}{2} = V_{IH} - \frac{V_{DD}}{2}$$

16.3.2 **Expressions for Noise Margin**

$$N_{MH} = V_{OH} - V_{IH}$$
$$= V_{DD} - \frac{1}{8}\left(5V_{DD} - 2V_t\right)$$
$$= \frac{1}{8}\left(3V_{DD} + 2V_t\right)$$

So if matched $N_{MH} = N_{ML}$, which is a good thing .. Why?

$$N_{ML} = V_{IL} - V_{OL}$$
$$= \frac{1}{8}\left(3V_{DD} + 2V_t\right) - 0V$$
$$= \frac{1}{8}\left(3V_{DD} + 2V_t\right)$$