Unit #2
Chapter #17.1: Dynamic Operation of CMOS Inverter
Lecture 9

from **Microelectronic Circuits** Text
by Sedra and Smith
Oxford Publishing

Quick Review of VTC for CMOS Inverter

$$V_M = \frac{r(V_{DD} - |V_{tp}|) + V_{tn}}{1 + r} \quad \text{where} \quad r = \sqrt{\frac{k_p'(W/L)_p}{k_n'(W/L)_n}}$$

For matched devices, that is, $\mu_n \left(\frac{W}{L}\right)_n = \mu_p \left(\frac{W}{L}\right)_p$, and $V_{tn} = -V_{tp} = V_t$

$r = 1$

$V_M = V_{DD}/2$

$V_{IL} = \frac{1}{8}(3V_{DD} + 2V_t)$

$V_{IH} = \frac{1}{8}(5V_{DD} - 2V_t)$

$NM_H = NM_L = \frac{1}{8}(3V_{DD} + 2V_t)$

Inverter Output Resistance

- When v_O is low (current sinking):

$$r_{DSN} = 1 \Big/ \left[k_n' \left(\frac{W}{L}\right)_n (V_{DD} - V_{tn}) \right]$$

- When v_O is high (current sourcing):

$$r_{DSP} = 1 \Big/ \left[k_p' \left(\frac{W}{L}\right)_p (V_{DD} - |V_{tp}|) \right]$$

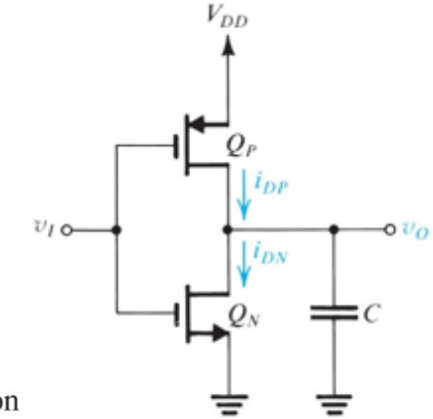

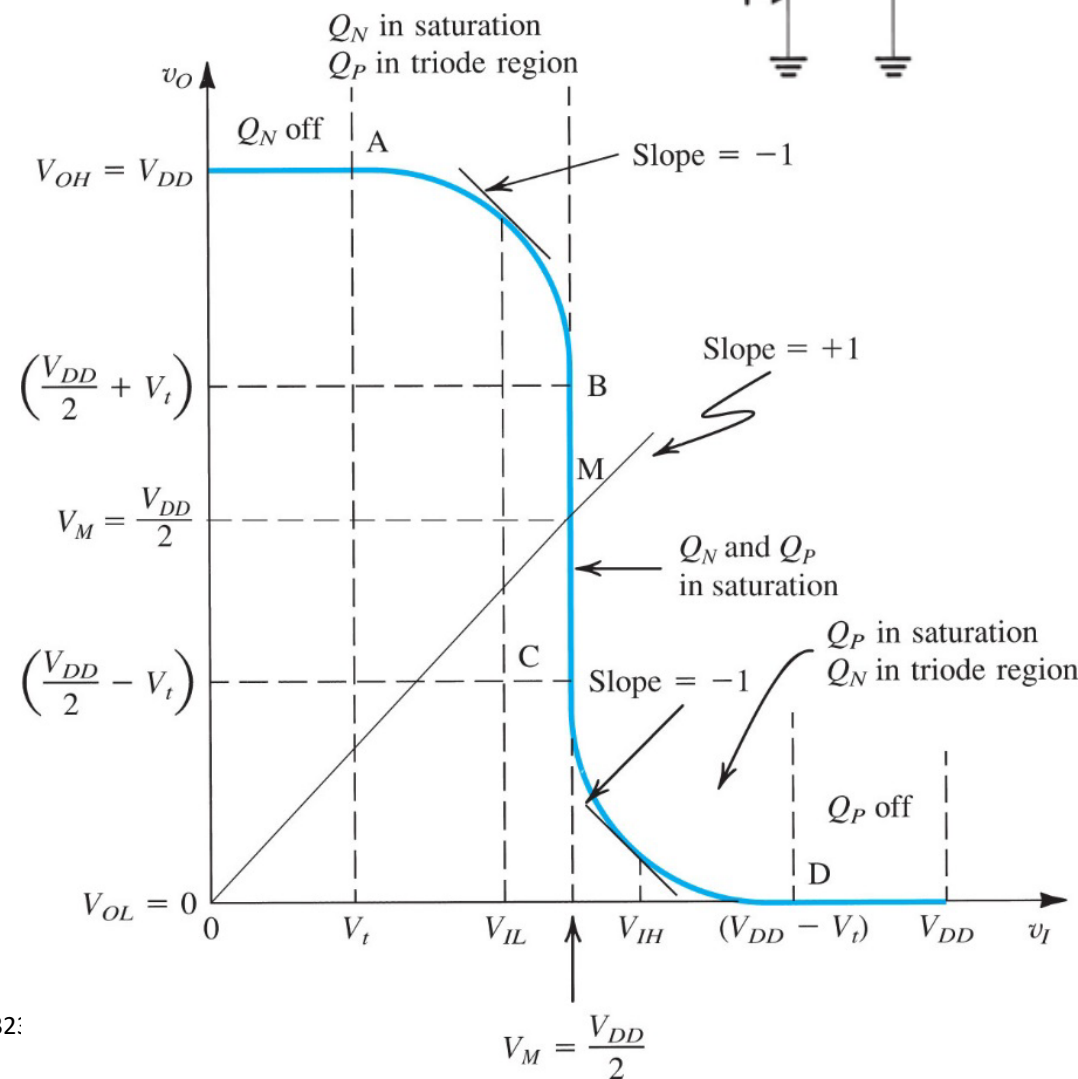

Oxford University Publishing
Microelectronic Circuits by Adel S. Sedra and Kenneth C. Smith (019532

MC74LCX04

DC ELECTRICAL CHARACTERISTICS

Symbol	Characteristic	Condition	T_A = −55°C to +125°C Min	Max	Unit
V_{IH}	HIGH Level Input Voltage (Note 2)	2.3 V ≤ V_{CC} ≤ 2.7 V	1.7		V
		2.7 V ≤ V_{CC} ≤ 3.6 V	2.0		
V_{IL}	LOW Level Input Voltage (Note 2)	2.3 V ≤ V_{CC} ≤ 2.7 V		0.7	V
		2.7 V ≤ V_{CC} ≤ 3.6 V		0.8	
V_{OH}	HIGH Level Output Voltage	2.3 V ≤ V_{CC} ≤ 3.6 V; I_{OH} = −100 μA	V_{CC} − 0.2		V
		V_{CC} = 2.3 V; I_{OH} = −8 mA	1.8		
	Note VOH is NOT Vcc	V_{CC} = 2.7 V; I_{OH} = −12 mA	2.2		
		V_{CC} = 3.0 V; I_{OH} = −18 mA	2.4		
		V_{CC} = 3.0 V; I_{OH} = −24 mA	2.2		
V_{OL}	LOW Level Output Voltage	2.3 V ≤ V_{CC} ≤ 3.6 V; I_{OL} = 100 μA		0.2	V
		V_{CC} = 2.3 V; I_{OL} = 8 mA		0.6	
	Note VOL is NOT GND (0V)	V_{CC} = 2.7 V; I_{OL} = 12 mA		0.4	
		V_{CC} = 3.0 V; I_{OL} = 16 mA		0.4	
		V_{CC} = 3.0 V; I_{OL} = 24 mA		0.55	
I_{OFF}	Power Off Leakage Current	V_{CC} = 0, V_{IN} = 5.5 V or V_{OUT} = 5.5 V		10	μA
I_{IN}	Input Leakage Current	V_{CC} = 3.6 V, V_{IN} = 5.5 V or GND		±5	μA
I_{CC}	Quiescent Supply Current	V_{CC} = 3.6 V, V_{IN} = 5.5 V or GND		10	μA
ΔI_{CC}	Increase in I_{CC} per Input	2.3 ≤ V_{CC} ≤ 3.6 V; V_{IH} = V_{CC} − 0.6 V		500	μA

2. These values of V_I are used to test DC electrical characteristics only.

17.1.1 **Propagation Delay**

- When driving capacitive loads, the output cannot respond instantaneously to the input
- The capacitive load is determined by input capacitance of next gate and intrinsic capacitance of inverter

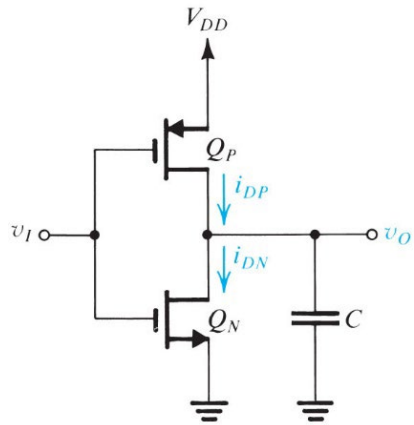

- This causes a delay in the signal as it propagates for the input (V_I) to output (v_O), i.e., a <u>propagation delay</u>
- Keeping the propagation delay as small as possible is critical in digital design

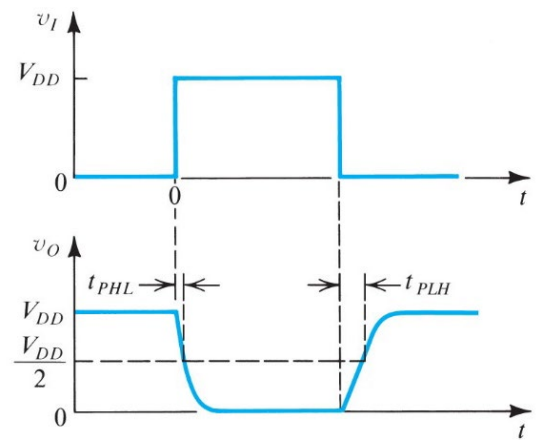

17.1.1 **High-to-Low and Low-to-High Output Transitions**

- Assume the input is a pulse that instantaneously switches from 0V to V_{DD} and from V_{DD} to 0V (never actually the case).

- High-to-low propagation delay, t_{PHL}, is time it takes for output to drop from V_{DD} to $V_{DD}/2$, when input switches from 0 to V_{DD}

- Low-to-high propagation delay, t_{PLH}, is time it takes for output to rise from 0V to $V_{DD}/2$, when input switches from V_{DD} to 0

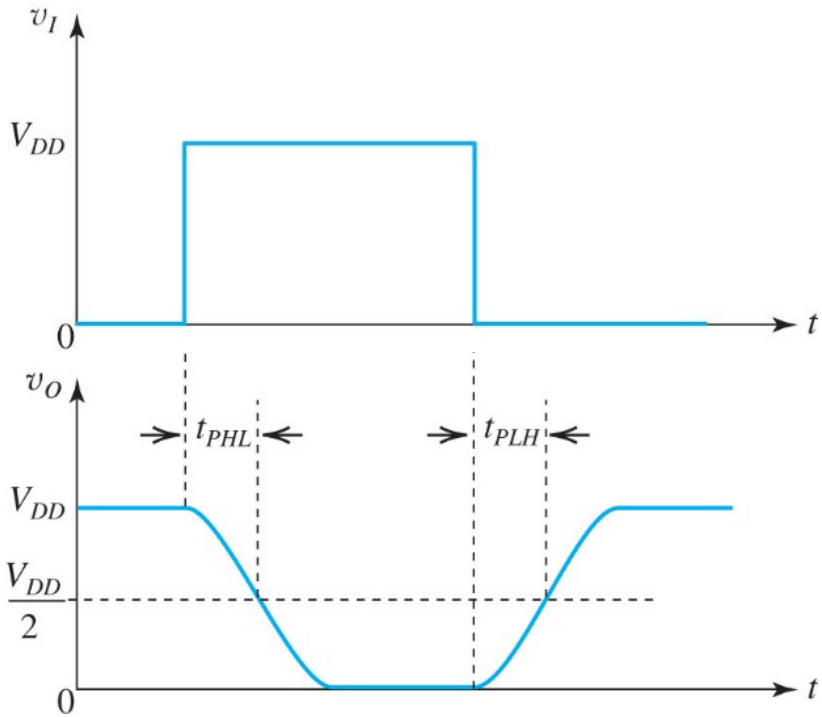

- Average propagation delay for inverter is

$$t_P = \frac{t_{PLH} + t_{PHL}}{2}$$

17.1.1 **Other Transition Time Definitions**

- In fact, the input cannot instantaneously switch
- Time <u>input</u> takes to transition from 10% V_{DD} to 90% V_{DD} is <u>rise time</u>, t_r, and time to switch from 90% V_{DD} to 10% V_{DD} is <u>fall time</u>, t_f
- Note: output transition is generally assumed to *really* begin when the input crosses $V_{DD}/2$
- Time <u>output</u> takes to switch from 90% V_{DD} to 10% V_{DD} is t_{THL}, and time to switch from 10% V_{DD} to 90% V_{DD} is t_{TLH}

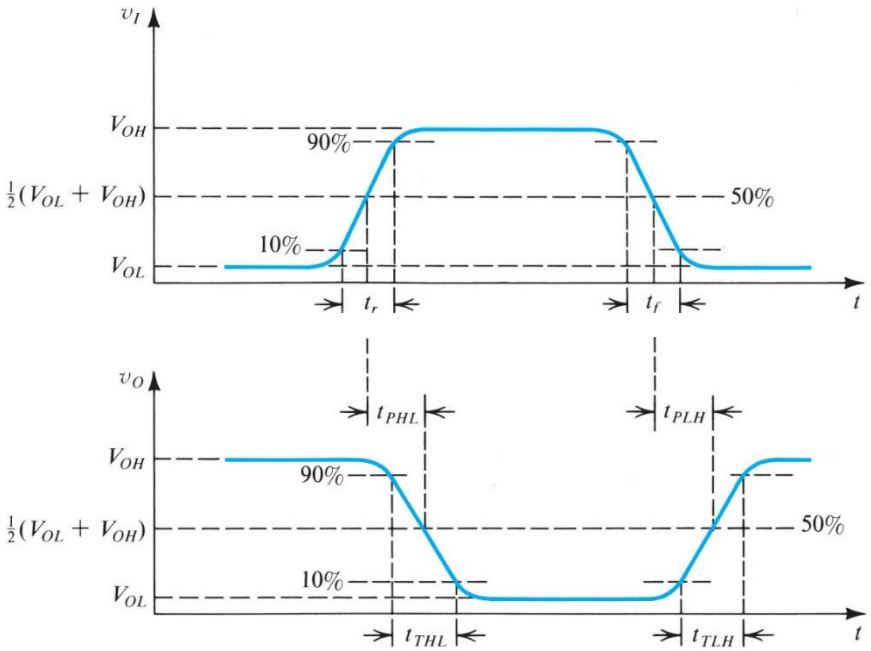

17.1.2 **Determining Propagation Delay (Method 1)**

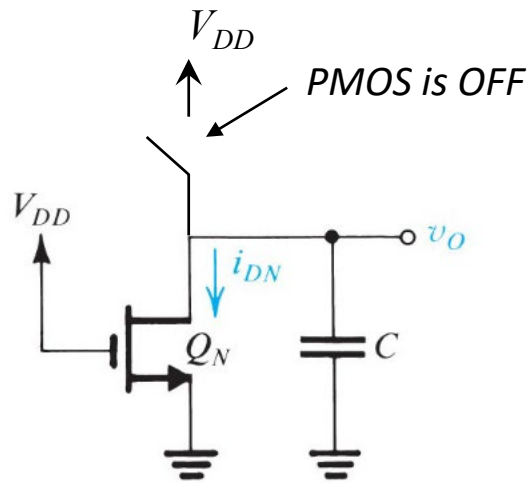

- Example: when input switches to V_{DD} (assume instantaneous), NMOS is on and the PMOS is off (no longer impacts response)

- Method 1, the average current method calculates t_{PHL} as

$$I_{av} t_{PHL} = Q_{av} = C\Delta V = C\left[V_{DD} - \left(\frac{V_{DD}}{2}\right)\right]$$

$$t_{PHL} = \frac{CV_{DD}}{2I_{av}}$$

17.1.2 **Determining Propagation Delay (Method 1)**

- How do we get I_{av}?
- Well what is the current I_{DN} when $v_O = V_{DD}$ and when $v_O = V_{DD}/2$

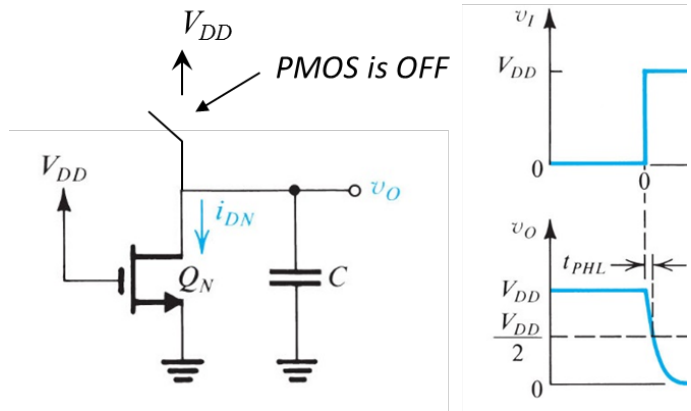

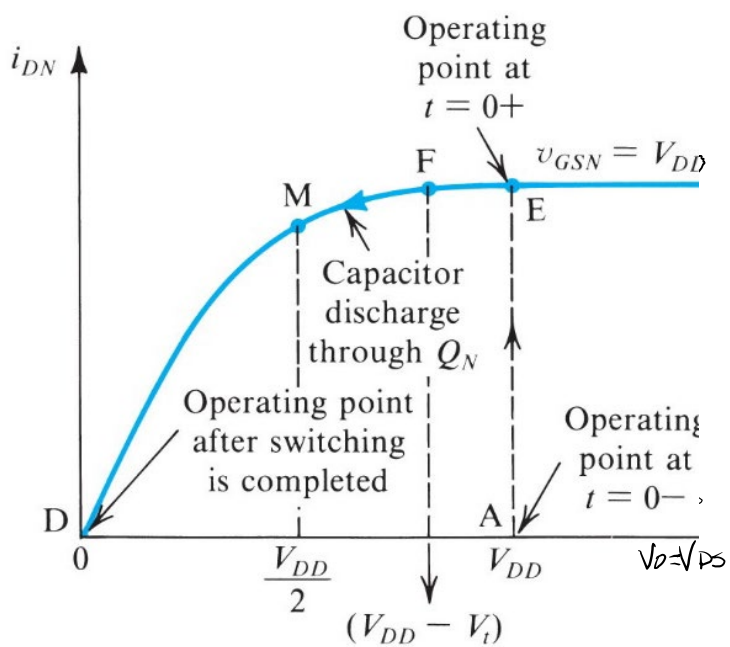

$$I_{av} \approx \frac{1}{2}\left[i_{DN}(E) + i_{DN}(M)\right]$$

$$i_{DN}(E) = \frac{1}{2}k_n'\left(\frac{W}{L}\right)_n (V_{DD} - V_{tn})^2$$

NMOS in sat

$$i_{DN}(M) = k_n'\left(\frac{W}{L}\right)_n \left[(V_{DD} - V_{tn})\frac{V_{DD}}{2} - \frac{1}{2}\left(\frac{V_{DD}}{2}\right)^2\right]$$

NMOS in triode

17.1.2 **Determining Propagation Delay (Method 1)**

- t_{PHL} can then be expressed as

$$t_{PHL} = \frac{2}{\left[\frac{7}{4} - \frac{3V_{tn}}{V_{DD}} + \left(\frac{V_{tn}}{V_{DD}}\right)^2\right]} \frac{C}{k_n'\left(\frac{W}{L}\right)_n V_{DD}}$$

$$\alpha_n = \frac{2}{\left[\frac{7}{4} - \frac{3V_{tn}}{V_{DD}} + \left(\frac{V_{tn}}{V_{DD}}\right)^2\right]}$$

- With same method, t_{PLH} can be expressed as

$$t_{PLH} = \frac{\alpha_p C}{k_p'\left(\frac{W}{L}\right)_p V_{DD}}$$

$$\alpha_p = \frac{2}{\left[\frac{7}{4} - \frac{3|V_{tp}|}{V_{DD}} + \left(\frac{|V_{tp}|}{V_{DD}}\right)^2\right]}$$

17.1.2 **Observations**

- $t_{PHL} = t_{PLH}$ if the NMOS and PMOS are matched
- t_{PHL} & t_{PLH} are proportional to C, so we want to minimize C
- Using process with larger k_n' will reduce prop delay
- A large W/L will reduce prop delay … but be careful, since increasing W too much can increase C (we will see why shortly)
- A large VDD will reduce prop delay

17.1.2 **Determining Propagation Delay (Method 2)**

- Method 1 is ok, but is cumbersome and is limited in accuracy due the use of the average current approximation
- An easier, more often use method for designers simply assumes the NMOS and PMOS act like resistors when they are turned on

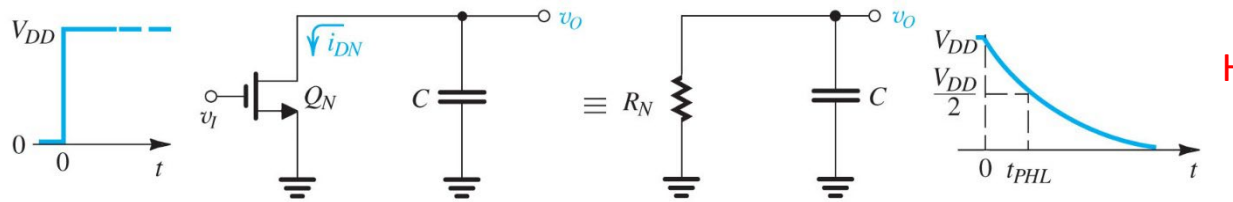

High-Low Output

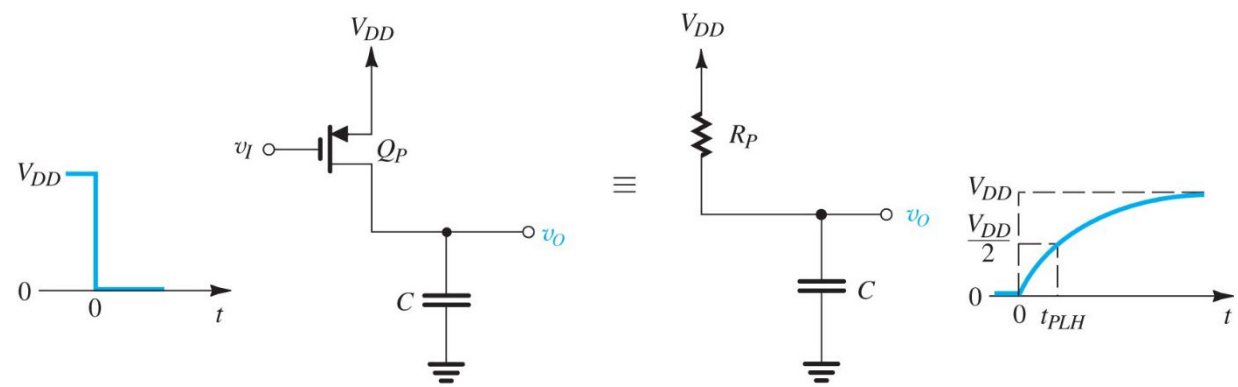

Low-High Output

17.1.2 **Determining Propagation Delay (Method 2)**

Below 0.13um

$$R_N = \frac{R_{eff,N}(W_{eff}/L_{eff})}{(W_n/L_n)}$$

$$R_P = \frac{R_{eff,P}(W_{eff}/L_{eff})}{(W_p/L_p)}$$

High-Low Output

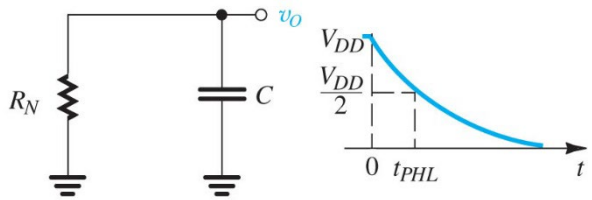

$$C\frac{dv_o}{dt} + \frac{v_o}{R} = 0$$

$$v_o = A\exp\left(-\frac{t}{RC}\right)$$

$$A = V_{DD}$$

$$v_o = V_{DD}\exp\left(-\frac{t}{RC}\right)$$

$$\frac{V_{DD}}{2} = V_{DD}\exp\left(-\frac{t_{PHL}}{RC}\right)$$

$$\exp\left(-\frac{t_{PHL}}{R_N C}\right) = \frac{1}{2}$$

$$\ln[\exp\left(-\frac{t_{PHL}}{R_N C}\right)] = \ln\frac{1}{2}$$

$$t_{PHL} = R_N C \ln(2)$$

$$\approx 0.69 R_N C$$

W_{eff}/L_{eff} =1
0.25,0.18,0.13um

$$R_N = \frac{12.5}{\left(\frac{W}{L}\right)_n} k\Omega$$

Low-High Output

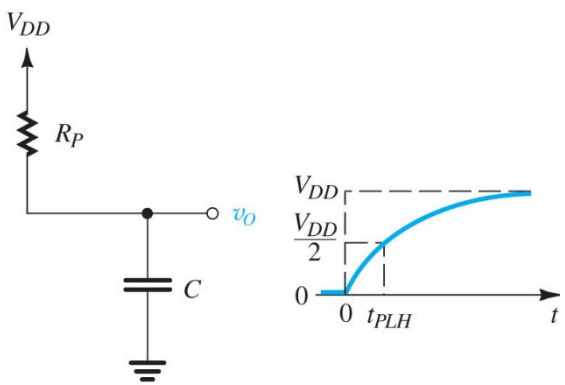

$$C\frac{dv_o}{dt} - \frac{V_{DD} - v_o}{R} = 0$$

$$v_o = A\exp\left(-\frac{t}{RC}\right) + V_{DD}$$

$$A = -V_{DD}$$

$$v_o = V_{DD}\left[1 - \exp\left(-\frac{t}{RC}\right)\right]$$

$$\frac{V_{DD}}{2} = V_{DD}\left[1 - \exp\left(-\frac{t_{PLH}}{R_P C}\right)\right]$$

$$\frac{1}{2} = 1 - \exp\left(-\frac{t_{PLH}}{R_P C}\right)$$

$$\exp\left(-\frac{t_{PLH}}{R_P C}\right) = \frac{1}{2}$$

$$t_{PLH} \approx 0.69 R_P C$$

W_{eff}/L_{eff} =1
0.25,0.18,0.13um

$$R_P = \frac{30}{\left(\frac{W}{L}\right)_p} k\Omega$$

17.1.2 **Total Propagation Delay Using Method 2**

$$t_p = \frac{1}{2}\left(t_{PLH} + t_{PHL}\right)$$

$$= 0.69\frac{\left(R_N + R_P\right)}{2}C = 0.69R_{eq}C$$

- Propagation delay sets the absolute minimum of the inverter switching period

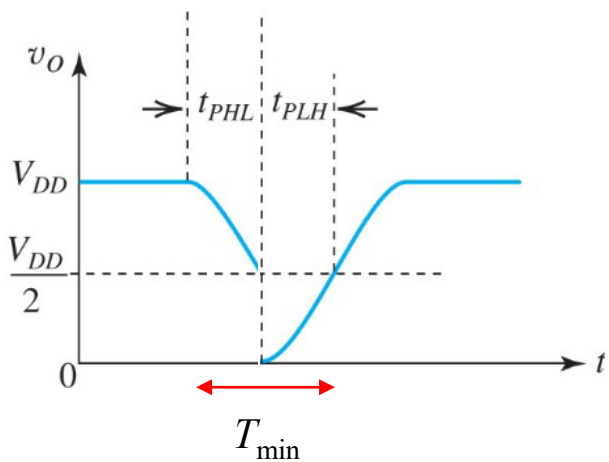

$$T_{min} = t_{PLH} + t_{PHL} = 2t_p$$

- It also sets the maximum switching frequency

$$f_{max} = \frac{1}{T_{min}} = \frac{1}{2t_p}$$

17.1.3 **Load Capacitance**

If inverter is driving another inverter

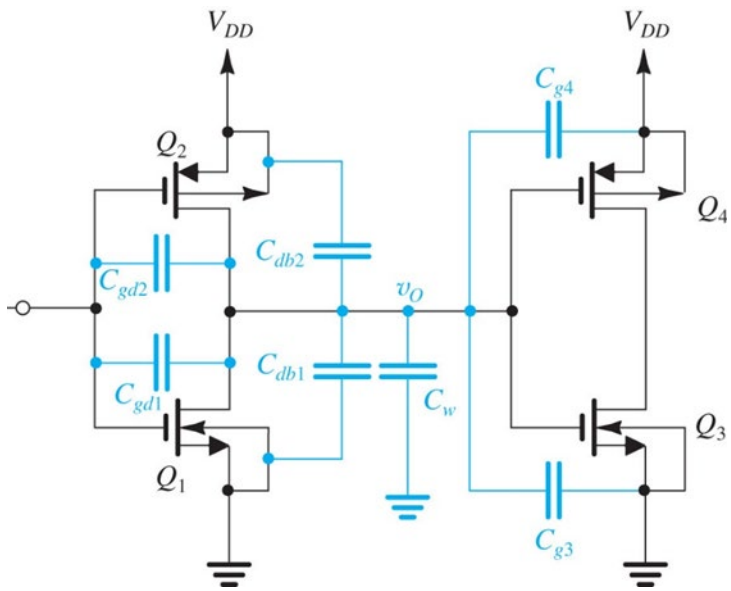

Intrinsic capacitors External capacitors

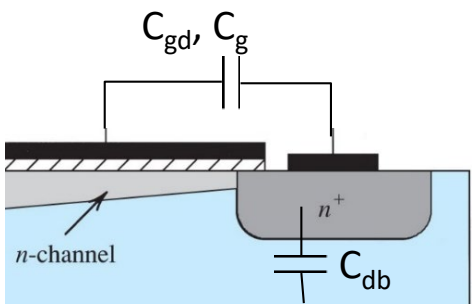

C_w is the capacitance of the wire connecting 2 inverters

17.1.3 Formula for Load Capacitance

Fanout = 1 Inverter

$$C = \underbrace{2C_{gd1} + 2C_{gd2}}_{\text{Factor of 2 from Miller Effect, gain on -1 V/V (will discuss later)}} + \underbrace{C_{db1} + C_{db2}}_{\text{Intrinsic capacitors } (C_{int})} + \underbrace{C_w + C_{g3} + C_{g4}}_{\text{External capacitors } (C_{ext})}$$

For a fanout of 4 -> Cg3 and Cg4 would be 4 times -> $4*C_{g3} + 4*C_{g4}$

Plus additional metal interconnect capacitance – C_{w4x}

MC74LCX04

Low-Voltage CMOS Hex Inverter

With 5 V−Tolerant Inputs

The MC74LCX04 is a high performance hex inverter operating from a 2.0 to 5.5 V supply. High impedance TTL compatible inputs significantly reduce current loading to input drivers while TTL compatible outputs offer improved switching noise performance. A V_I specification of 5.5 V allows MC74LCX04 inputs to be safely driven from 5 V devices if V_{CC} is less than 5.0 V.

Current drive capability is 24 mA at the outputs.

ON Semiconductor®

http://onsemi.com

SOIC−14 NB
D SUFFIX
CASE 751A

TSSOP−14
DT SUFFIX
CASE 948G

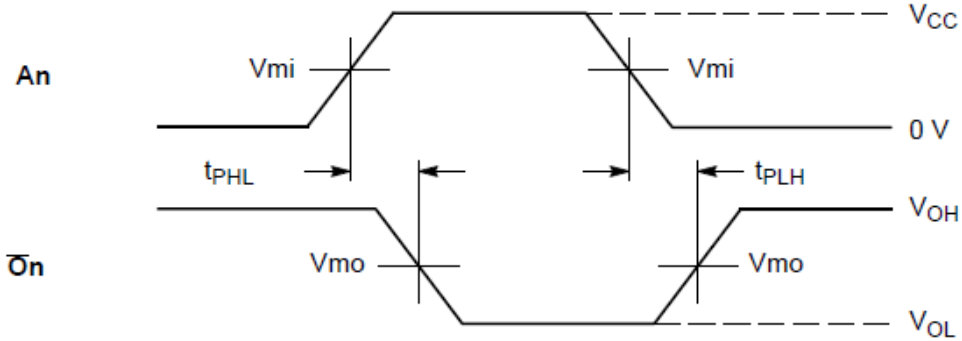

WAVEFORM 1 – PROPAGATION DELAYS

$t_R = t_F = 2.5$ ns, 10% to 90%; f = 1 MHz; $t_W = 500$ ns

AC CHARACTERISTICS ($t_R = t_F = 2.5$ ns; $R_L = 500\ \Omega$)

			Limits						
			$T_A = -55°C$ to $+125°C$						
			$V_{CC} = 3.3\ V \pm 0.3\ V$		$V_{CC} = 2.7\ V$		$V_{CC} = 2.5\ V \pm 0.2\ V$		
			$C_L = 50$ pF		$C_L = 50$ pF		$C_L = 30$ pF		
Symbol	Parameter	Waveform	Min	Max	Min	Max	Min	Max	Unit
t_{PLH}	Propagation Delay Time	1	1.5	5.2	1.5	6.0	1.5	6.2	ns
t_{PHL}	Input to Output		1.5	5.2	1.5	6.0	1.5	6.2	
t_{OSHL}	Output−to−Output Skew			1.0					ns
t_{OSLH}	(Note 3)			1.0					

3. Skew is defined as the absolute value of the difference between the actual propagation delay for any two separate outputs of the same device. The specification applies to any outputs switching in the same direction, either HIGH−to−LOW (t_{OSHL}) or LOW−to−HIGH (t_{OSLH}); parameter guaranteed by design.

Go To Problems for Lecture #9

Exercise 17.1
Example 17.2 (different numbers)