Example 8.4

Design a matched cascode current source of Fig. 8.30 to provide a **current of 100 µA** and an **output resistance of 500 kΩ**. Assume the availability of a 0.18-µm CMOS technology for which **V_{DD} = 1.8 V, Vtp = −0.5 V, µpCox = 90 µA/V² and V'_A= -5V/um. Use $|V_{OV}|$ = 0.3 V.**
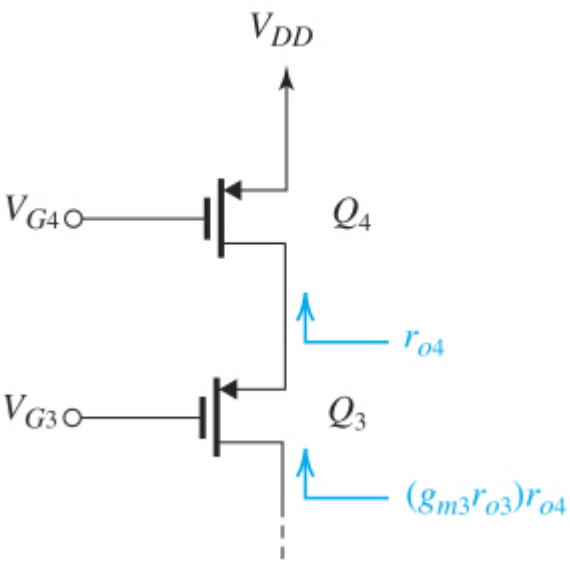
Determine L and W/L for each transistor, and the **values of the bias voltages V_{G3} and V_{G4}**. Design to maximize the allowable signal swing at the output terminal.