Unit #6
Chapter #8.5: The Cascode Amplifier
Lecture CCA

from **Microelectronic Circuits** Text
by Sedra and Smith
Oxford Publishing

8.3.4 Increasing Gain of Basic Gain Cell

- **In Lecture 21 we saw intrinsic voltage gain, A_{v0}, can be increased by using a current buffer to increase output resistance of the gain cell**

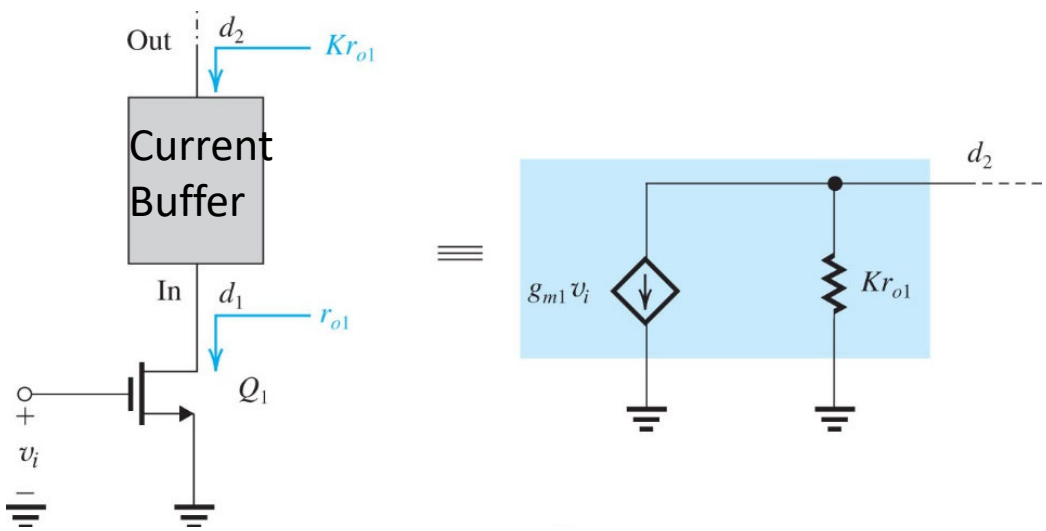

$$A_{v0} = -Kg_{m1}r_{o1}$$

8.5.1 **Cascoding**

- **In Lecture 22 we saw that a common gate amplifier *is* a current buffer**

- **So if we "load" the basic common source gain cell with …**

  … a common gate we can significantly increase intrinsic gain

  This multiple transistor design technique is called "cascoding"

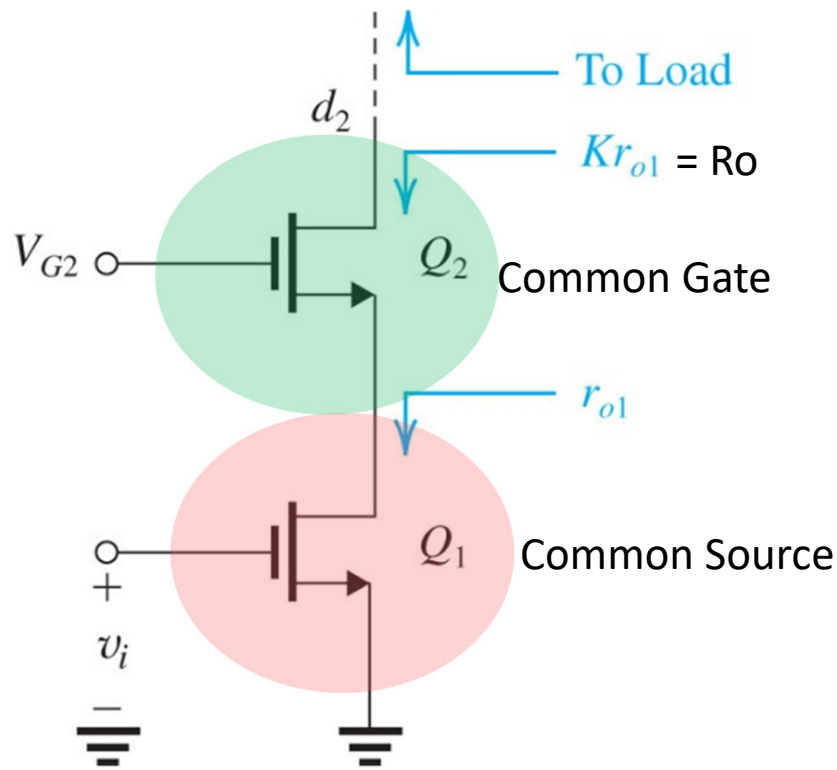

8.5.2 **The MOS Cascode Amplifier (Ideal Case)**

- **Let's first consider a MOS cascode design where the two stage (CS-CG) amplifier is loaded by an ideal current source**

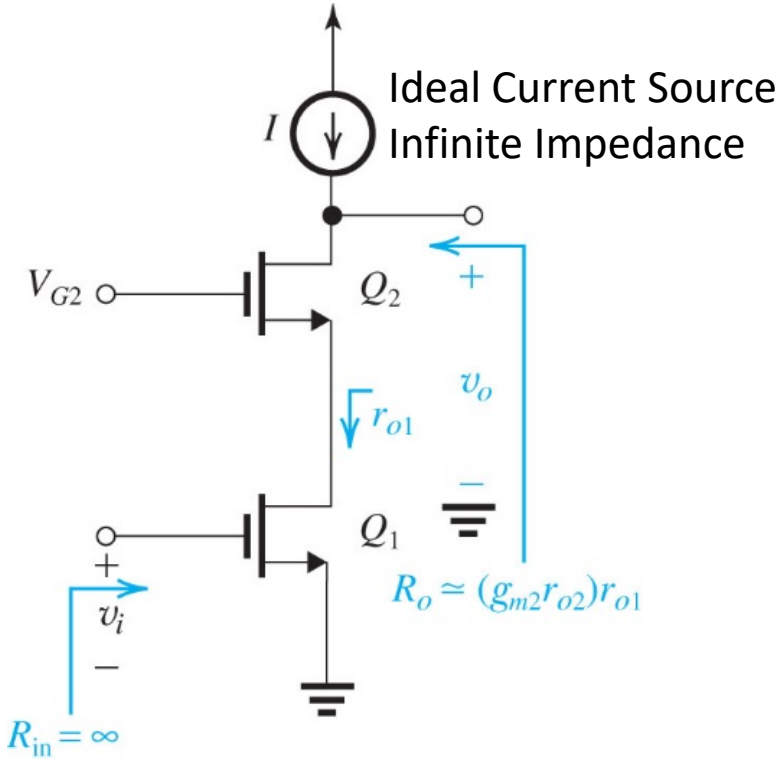

- **Here the intrinsic gain is**

$$A_{v0} = \frac{v_o}{v_i} = -g_{m1}R_o$$

where

$$R_o \approx (g_{m2}r_{o2})r_{o1}$$

$$A_{v0} \approx -(g_{m1}r_{o1})(g_{m2}r_{o2})$$

$$\approx -(g_m r_o)^2 \quad \text{if } g_{m1} = g_{m2} \text{ and } r_{o1} = r_{o2}$$

How do we get this again?

8.5.2 **Deriving output resistance of the cascode configuration**

- **How do we come up with** $R_o \approx (g_{m2} r_{o2}) r_{o1}$ **?**

Small signal schematic

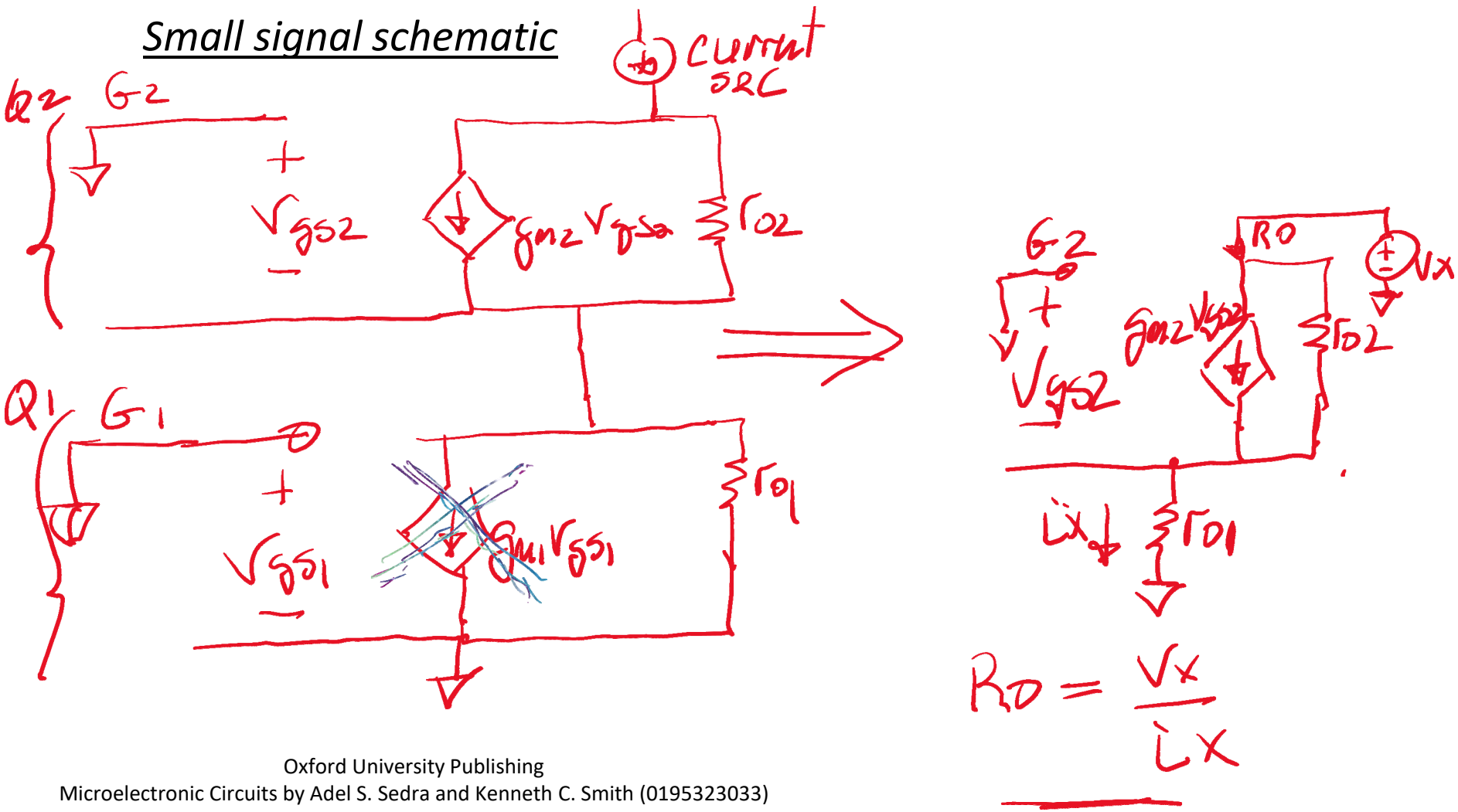

8.5.2 **Deriving output resistance of the cascode configuration**

- **How do we come up with** $R_o \approx (g_{m2} r_{o2}) r_{o1}$ **?**

Small signal schematic

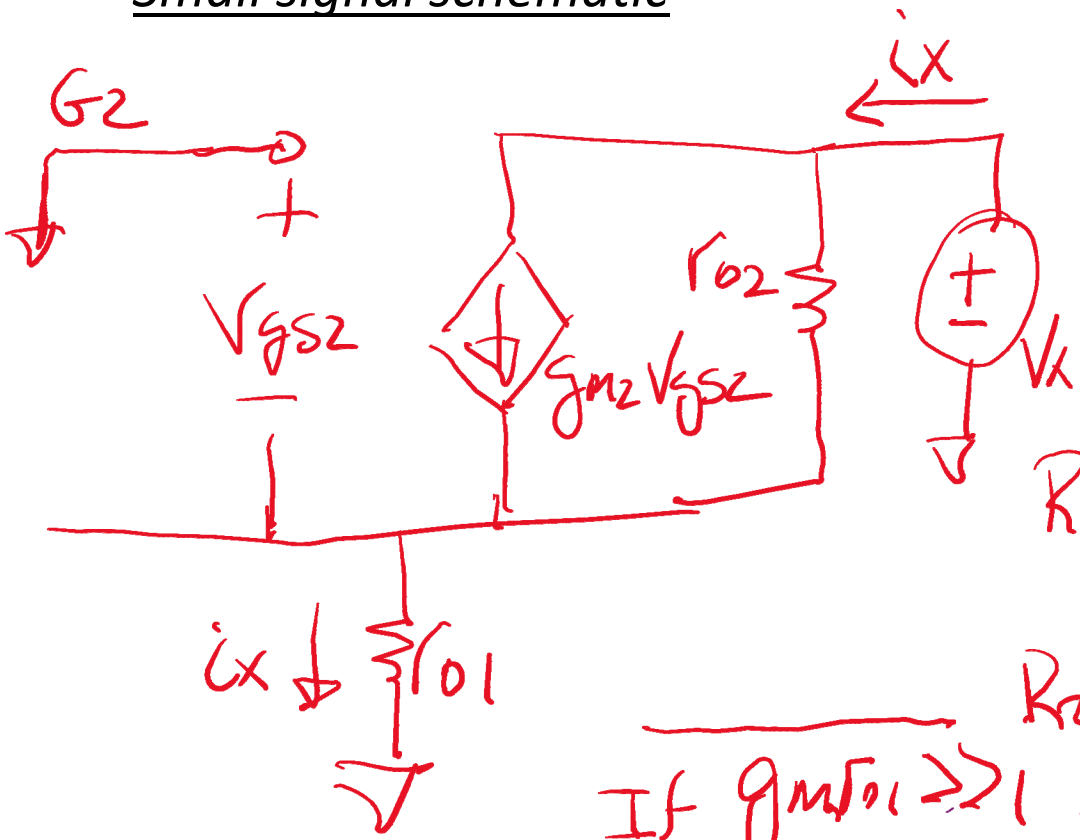

Derivation of R_o

$$R_o = \frac{V_x}{i_x}$$

$$V_x = (i_x - V_{gs2} g_{m2}) r_{o2} + i_x r_{o1}$$

$$V_{gs2} = -i_x r_{o1}$$

$$R_o = \frac{V_x}{i_x} = (1 + g_{m2} r_{o1}) r_{o2} + r_{o1}$$

$$R_o = r_{o1} + r_{o2} + (g_{m2} r_{o2}) r_{o1}$$

If $g_m r_{o1} \gg 1$

$g_{m2} r_{o2} \gg 1$

$$\boxed{R_o \approx (g_{m2} r_{o2}) r_{o1}}$$

8.5.2 NMOS Cascode Amplifier with PMOS Current Source Load

- In a real integrated circuit, an NMOS cascade would be loaded with a PMOS current source

- The load resistance, R_L, is the output resistance, r_{o3}, of the PMOS source

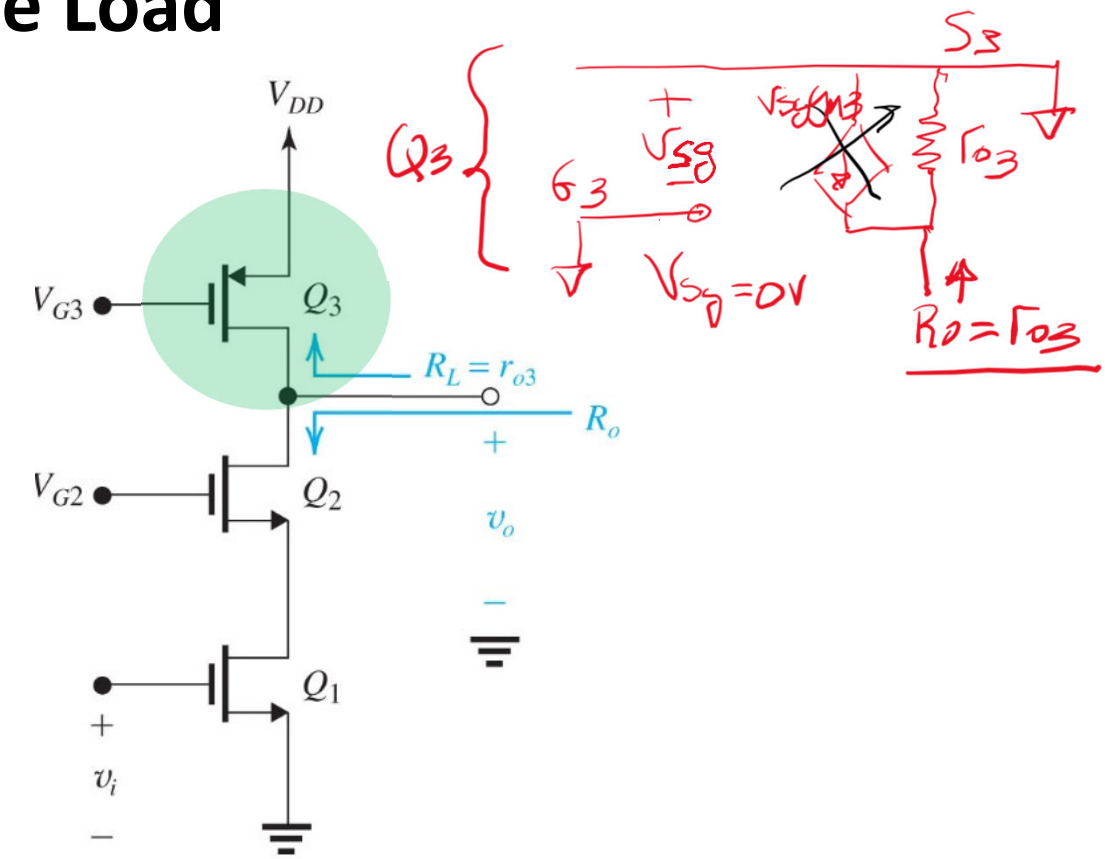

$$So$$

$$R_L = r_{o3}$$

$$A_v = -g_{m1}\left(R_o \parallel r_{o3}\right) \approx -g_{m1} r_{o3}$$

Since $r_{o3} << R_o$, the overall midband gain of cascode is no better than a CS amp!

What can we do??

8.5.2 **NMOS Cascode Amplifier with PMOS Cascode Current Source**

- **In order to realize a gain closer to the ideal, we need a load resistance, R_L, to be the same order as R_o**
- **This is achieved by using a cascode current source**

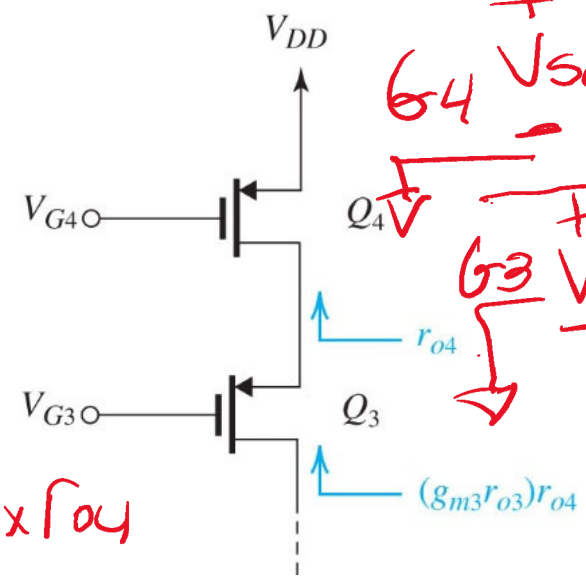

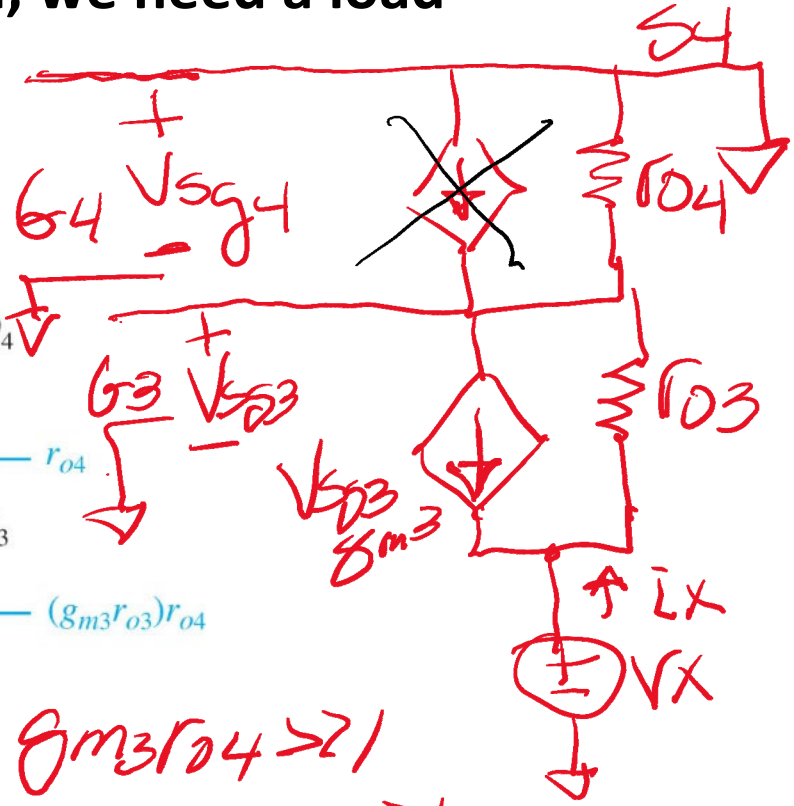

Derivation of R_L

① $V_{sg3} = i_x r_{o4}$

② $V_x = (i_x + g_{m3} V_{sg3}) r_{o3} + i_x r_{o4}$

$V_x = i_x (1 + g_{m3} r_{o4}) r_{o3} + r_{o4}$

$R_L = \frac{V_x}{i_x} = r_{o3} + r_{o4} + (g_{m3} r_{o3}) r_{o4}$ $\therefore$ $R_L = R_{op} \approx (g_{m3} r_{o3}) r_{o4}$

If $g_{m3} r_{o4} \gg 1$

If $g_{m3} r_{o3} \gg 1$

8.5.2 **NMOS Cascode Amplifier with PMOS Cascode Current Source**

- **The fully cascoded design is**

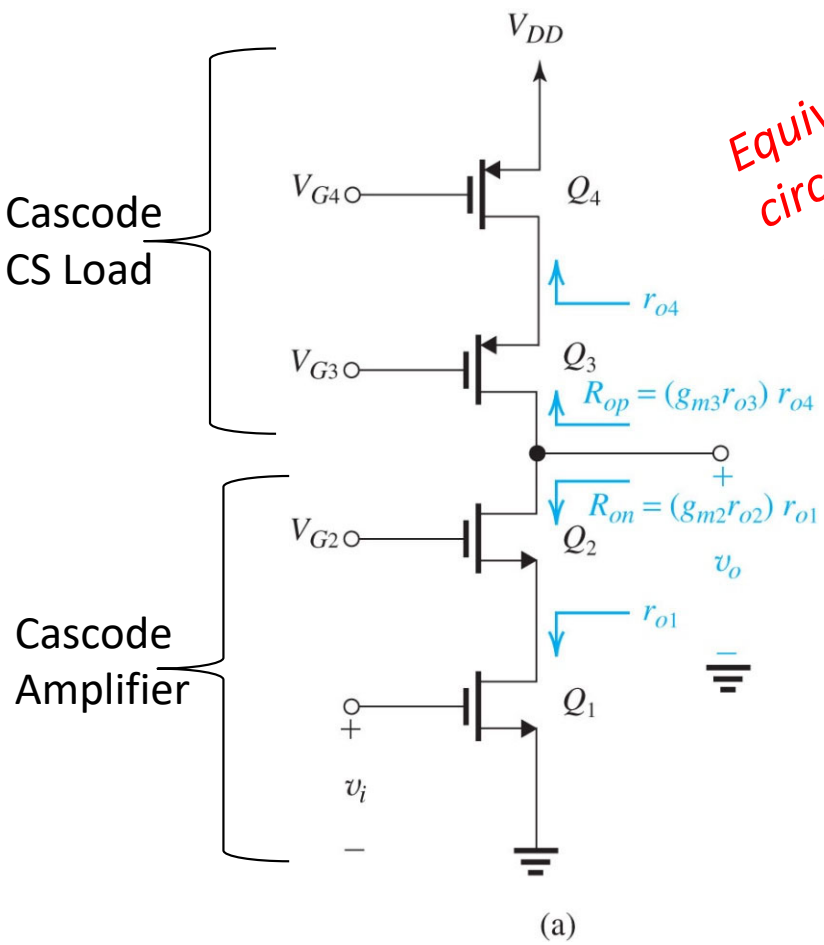

(a)

Equivalent circuit model

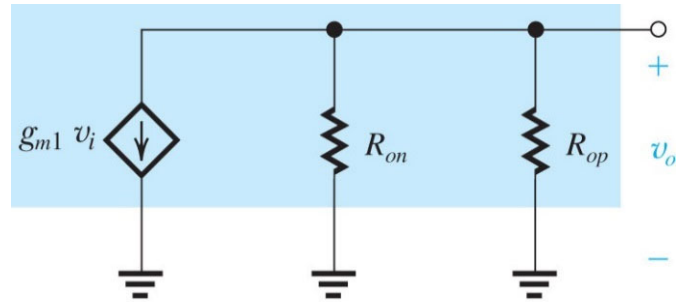

$$A_v = \frac{v_o}{v_i} = -g_{m1}\left(R_{on} \parallel R_{op}\right)$$

$$A_v \approx -g_{m1}\left[\left(g_{m2}r_{o2}\right)r_{o1} \parallel \left(g_{m3}r_{o3}\right)r_{o4}\right]$$

If all the transistors are matched

$$A_v \approx -\frac{1}{2}\left(g_m r_o\right)^2$$

Fully Cascoded Common Source Amplifier

Oxford University Publishing
Microelectronic Circuits by Adel S. Sedra and Kenneth C. Smith (0195323033)