Unit #6
Chapter #10.4.2: High Frequency Response of Cascode Amplifier
Lecture CCA-HF

from **Microelectronic Circuits** Text
by Sedra and Smith
Oxford Publishing

8.5.2 CS vs. Cascode Midband Response

- **Recall for the ideal CS gain cell the voltage gain is**

$$A_{v0} = -A_o = -g_{m1} r_{o1}$$

- **If the output resistance of the current source is R_L, then the gain becomes**

$$A_{v0} = -g_{m1}\left(r_{o1} \parallel R_L\right)$$

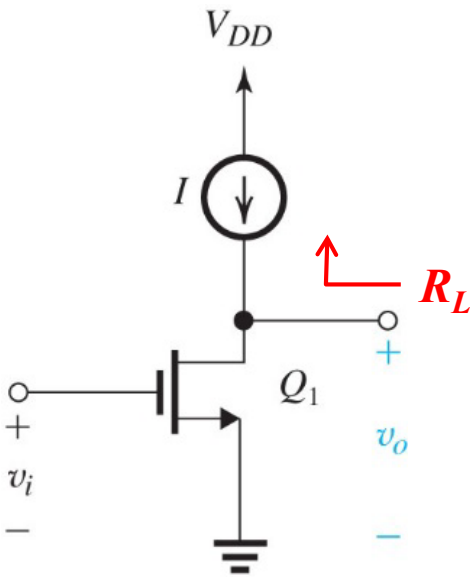

8.5.2 CS vs. Cascode Midband Response

- **For the cascode amplifier the ideal voltage gain is**

$$A_{v0} \approx -A_o^{\ 2} = -\left(g_m r_o\right)^2$$

Much bigger than CS
Ao = -$g_m r_o$

- **But if resistance of current source is R_L, then the gain becomes**

$$A_{v0} \approx -g_m\left(g_m r_o^{\ 2} \parallel R_L\right)$$

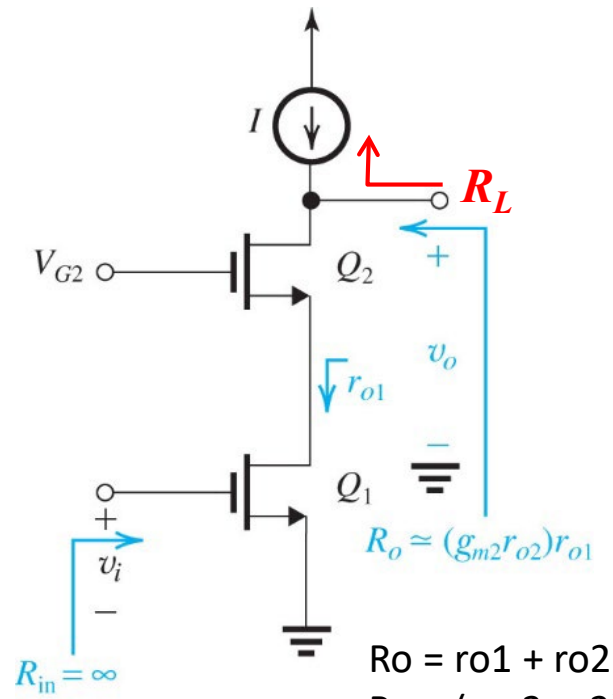

Ro = ro1 + ro2 + (gm2 ro2)ro1
Ro ≈ (gm2 ro2)ro1

In order for the gain to be improved by the cascode, we need R_L big (use a cascode source)

10.4.2 **Design Tradeoffs for Cascode Amplifier**

- **In addition to increasing output resistance and gain, we can use cascode to increase ω_H**

- **Design Tradeoffs**
  1) **Increase the voltage gain which requires $R_L \approx g_m r_o^2$ (Lecture 32)**

  Or

  2) **Increase ω_H - the high 3db frequency which requires smaller R_L**

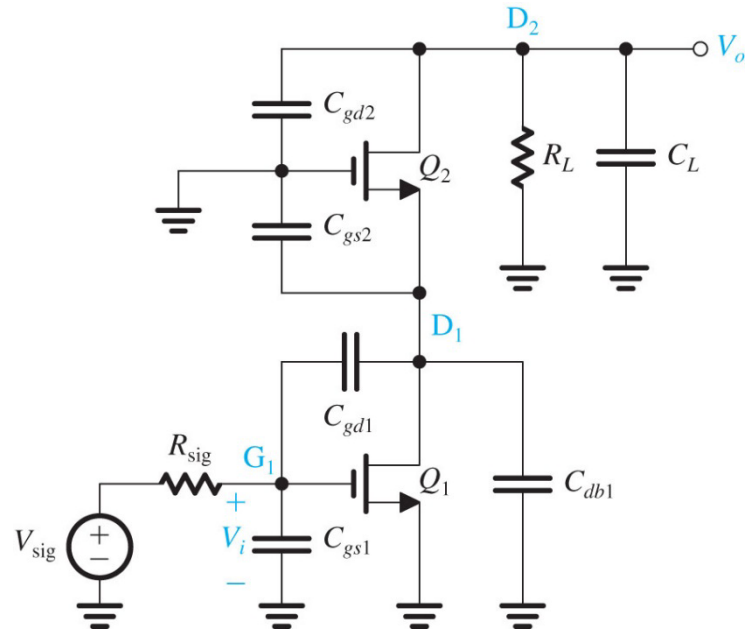

This tradeoff is dependent on the size of R_{sig} and R_L (will only consider BIG R_{sig} with variable R_L)

10.3.3 **High frequency response for CS amplifier**

- **Recall the 3db frequency for the CS is computed with OCTC as**

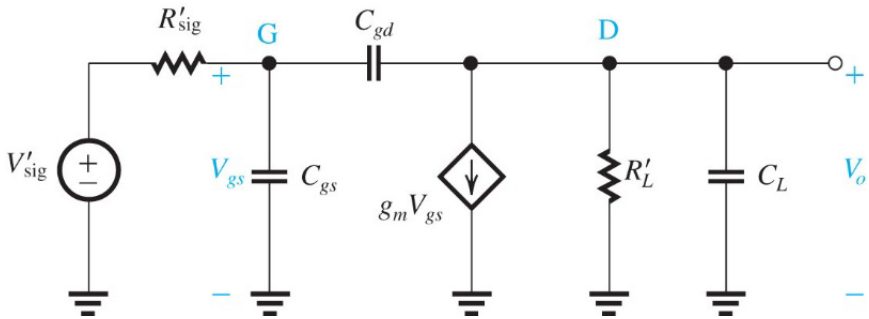

$$\omega_H = \frac{1}{C_{gs}R_{sig'} + C_{gd}\left[\underbrace{R_{sig'}(1+g_m R_L')}_{\text{Note the Miller Multiplier}} + R_L'\right] + C_L R_L'}$$

$$\omega_H = \frac{1}{Rsig'(Cgs+Cgd(1+gmR_L')) + R_L'(Cgd+C_L)}; \quad R_L' = ro1//R_L$$

10.4.2 **High frequency response for Cascode Amplifier**

- **What are the open circuit time constants for the cascode (assume Miller)?**

There are three

1 $$\tau_1 = R_{sig}\left(C_{gs1} + C_M\right)$$

where

$$C_M = C_{gd1}\left(1 - A_{v1}\right)$$

Gain of 1st CS stage

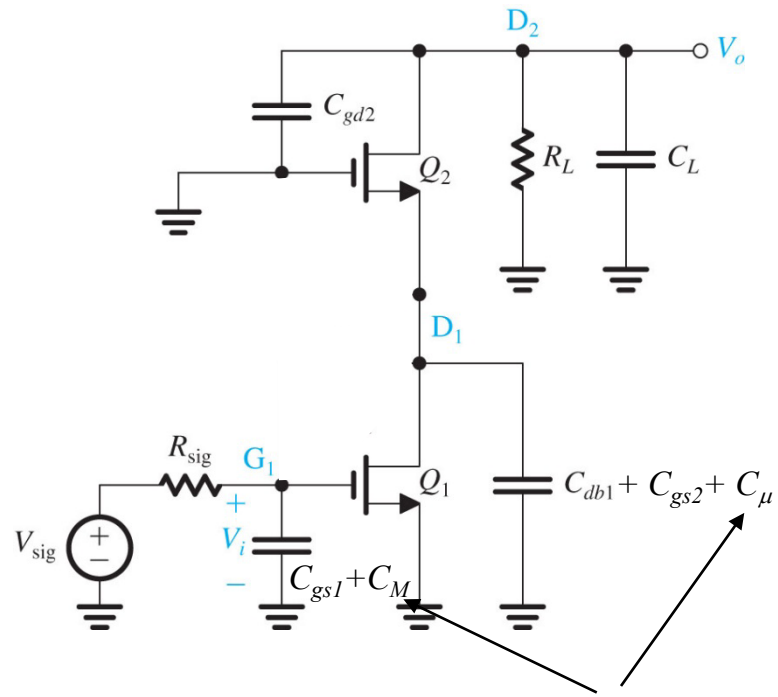

Miller Capacitances of Cgd reflected to input and output

10.4.2 **High frequency response for Cascode Amplifier**

- **What is A_{v1}?**

$$A_{v1} = -g_{m1}\underbrace{\left(r_{o1} \parallel R_{in2}\right)}_{R_{d1}}$$

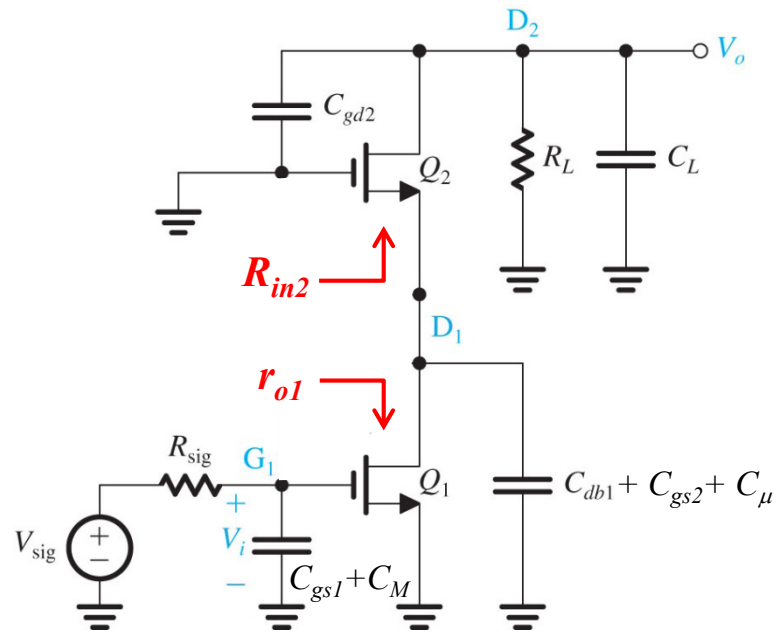

- **And R_{in2} is the input resistance of a CG amp**

$$R_{in2} = \frac{r_{o2} + R_L}{1 + g_{m2} r_{o2}}$$

$$\tau_1 = \text{Rsig}\,[\text{Cgs}_1 + \text{Cgd}_1(1+\text{gm}_1\text{R}_{d1})]$$

10.4.2 **High frequency response for Cascode Amplifier**

2

$$\tau_2 = R_{d1}\left(C_{db1} + C_{gs2} + C_{\mu}\right)$$

where

$$C_{\mu} = C_{gd1}\left(1 - \frac{1}{A_{v1}}\right) \approx C_{gd1}$$

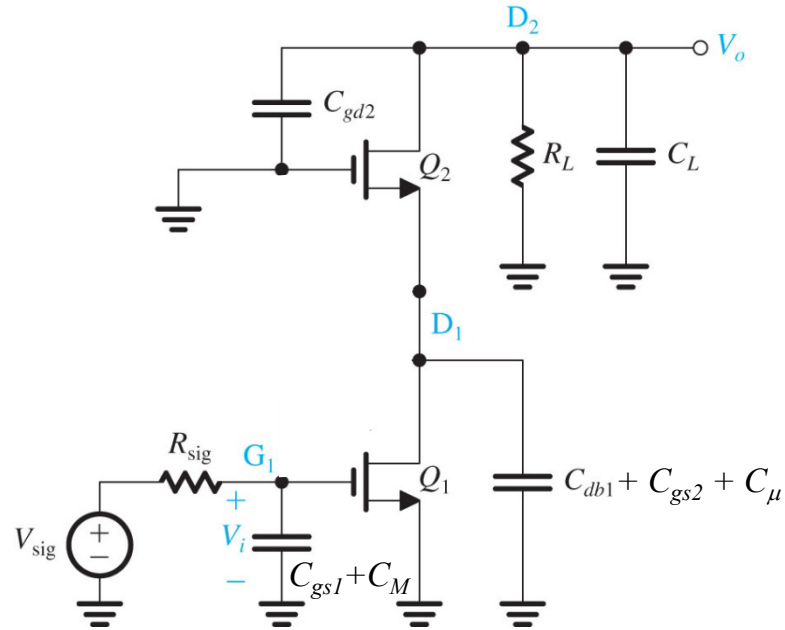

10.4.2 **High frequency response for Cascode Amplifier**

3

$$\tau_3 = (R_o \parallel R_L)(C_{gd2} + C_L)$$

where

$$R_o \approx g_{m2} r_{o1} r_{o2}$$

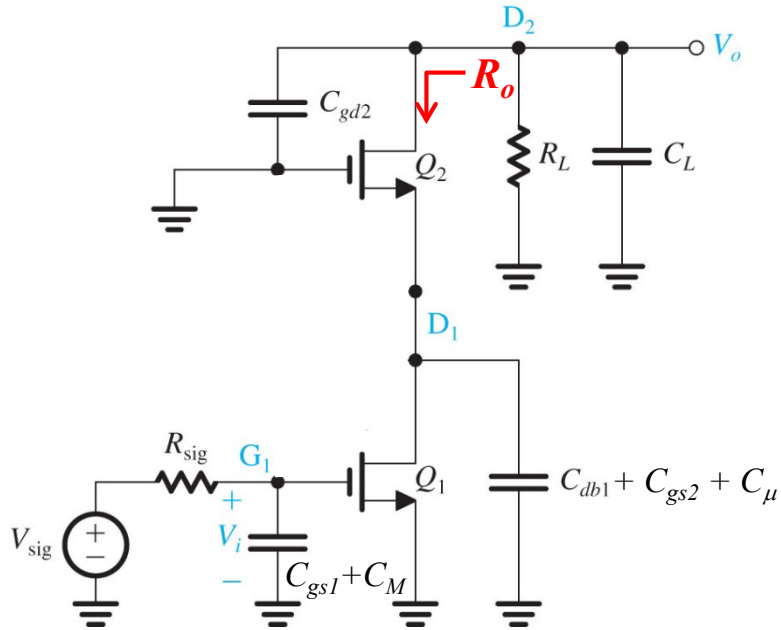

10.4.2 **High frequency response for Cascode Amplifier**

So the 3db frequency is

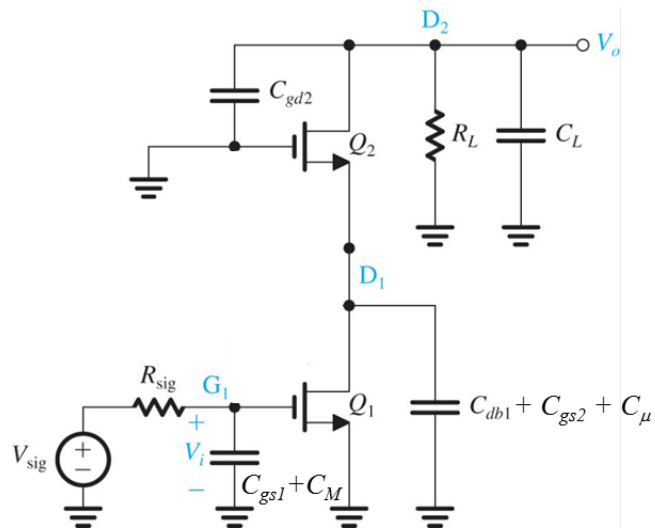

$$\omega_H = \frac{1}{\tau_1 + \tau_2 + \tau_3}$$

$$\approx \frac{1}{\underbrace{R_{sig}\left[C_{gs1} + C_{gd1}\left(1 + g_{m1}R_{d1}\right)\right]}_{\boldsymbol{\tau}_1} + \underbrace{R_{d1}\left(C_{db1} + C_{gs2} + C_{gd1}\right)}_{\boldsymbol{\tau}_2} + \underbrace{\left(R_o \parallel R_L\right)\left(C_{gd2} + C_L\right)}_{\boldsymbol{\tau}_3}}$$

10.4.2 **Comparing CS to Cascode Amplifiers**

- **BIG R_{sig}**

$$\omega_{H,CS} = \frac{1}{R_{sig'}\left[C_{gs_1} + C_{gd_1}\left(1 + g_m R_L'\right)\right]}$$

$$\omega_{H,cascode} \approx \frac{1}{R_{sig}\left[C_{gs1} + C_{gd1}\left(1 + g_{m1} R_{d1}\right)\right]}$$

- **BIG R_L … relative to $g_m r_o^2$,**
  $R_L' = r_o // R_L \approx r_o$

Voltage Gain

$$A_{v,cascode} \approx -\frac{\left(g_m r_o\right)^2}{2} \quad >> \quad A_{v,CS} \approx -g_m r_o$$

10.4.2 **Comparing CS to Cascode Amplifiers**

But the bandwidth under the conditions is

$$\omega_{H,CS} = \frac{1}{R_{sig'}\left[C_{gs_1} + C_{gd_1}\left(1 + g_m R_L'\right)\right]}$$

$$\approx \frac{1}{R_{sig'}\left[C_{gs_1} + C_{gd_1}\left(1 + g_m r_o\right)\right]}$$

$R_L' = r_o // R_L \approx r_o$

$R_{d1} = r_o // R_{in2} \approx r_o/2$

$R_{in2} = \frac{r_o + gm\, ro^2}{1 + gmro} \approx r_o$

About the same

$$\omega_{H,cascode} \approx \frac{1}{R_{sig}\left[C_{gs1} + C_{gd1}\left(1 + g_{m1} R_{d1}\right)\right]}$$

$$\approx \frac{1}{R_{sig}\left[C_{gs1} + C_{gd1}\left(1 + \underbrace{g_{m1} r_o}_{2}\right)\right]}$$

10.4.2 **Comparing CS to Cascode Amplifiers**

- **BIG R_{sig} but small $R_L << r_o$**

Voltage Gain

$$A_{v,CS} \approx A_{v,cascode} \approx -g_m R_L$$

Bandwidth

$$\omega_{H,CS} \approx \frac{1}{R_{sig'}\left[C_{gs_1} + C_{gd_1}\left(1 + g_m R_L\right)\right]}$$

$$\omega_{H,cascode} \approx \frac{1}{R_{sig'}\left[C_{gs_1} + 2C_{gd_1}\right]}$$

Under these conditions the bandwidth of the <u>cascode is much larger the CS</u>, even though the gains are about the same

$A_{v,CS} = -gm(r_o // R_L) = -gmR_L$

$A_{v,CC} = -gm(R_o // R_L) = -gmR_L$

$R_{d1} = r_o // R_{in2} \approx \frac{1}{gm}$

$R_{in2} = \frac{r_o + R_L}{1 + g_m r_o} \approx \frac{1}{gm}$

$C_{gd1}(1+g_m R_{d1}) = C_{gd1}(1 + g_m * 1/g_m)$
$= 2 * C_{gd1}$

Oxford University Publishing
Microelectronic Circuits by Adel S. Sedra and Kenneth C. Smith (0195323033)

10.4.2 **Comparing CS to Cascode Amplifiers**

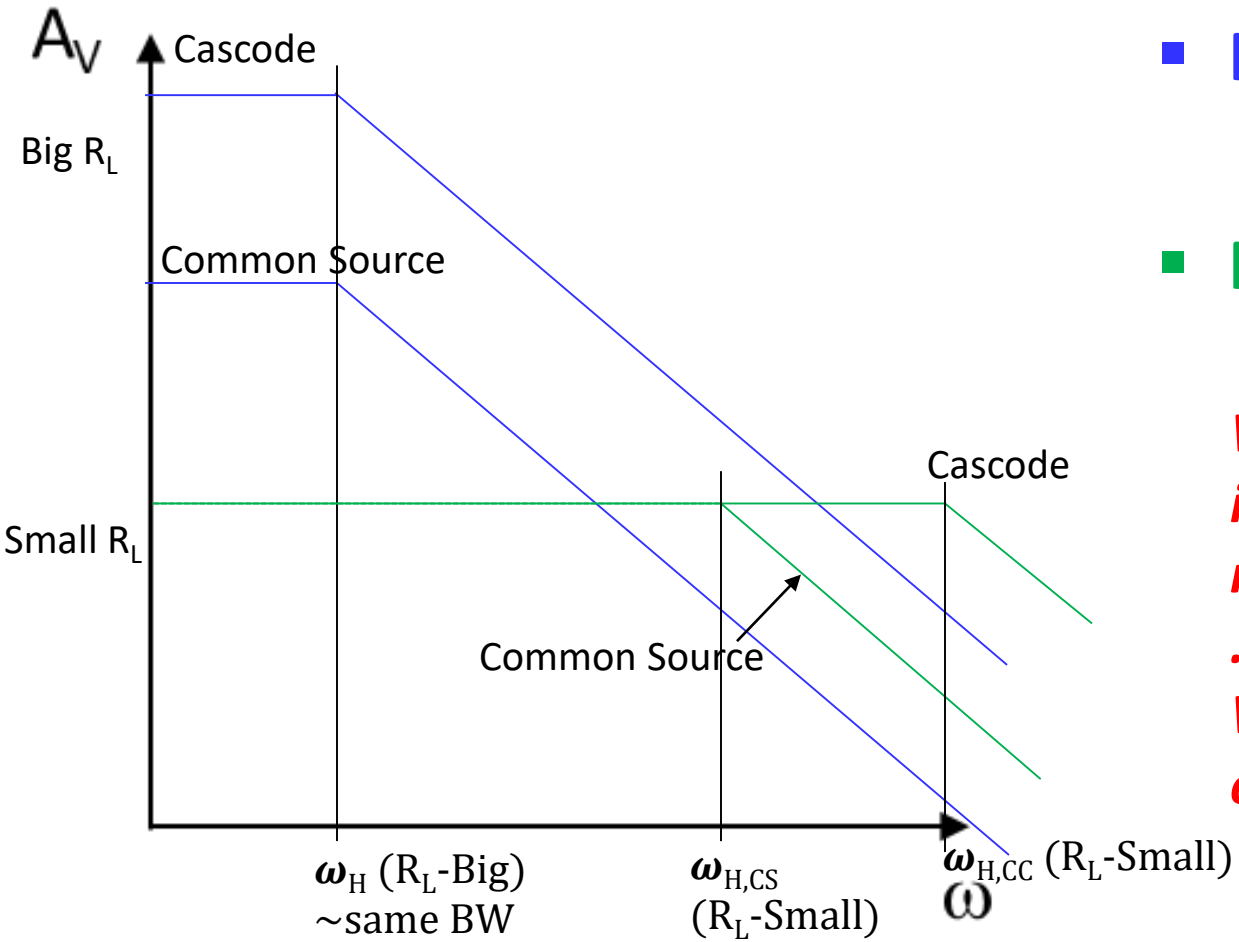

- **R_{sig} and R_L BIG**
- **R_{sig} BIG and R_L small**

What happens when R_L is somewhere in the middle?

…

We show this in the next example problem.