Review of Transmission Lines – Part 2

James T. Aberle, Ph.D.
Associate Professor Emeritus

School of ECEE

Ira A. Fulton Schools of Engineering
Arizona State University

Lecture Objective

- By the end of this lecture, you will :
  - Recall the extension of the telegrapher's equations and wave equations to lossy transmission lines, and the determination of transmission line parameters from the geometry.

Mechanisms of Loss in Transmission Line Structures

- Dielectric loss
- Conductor loss

Let's consider only non-magnetic materials $\mu = \mu_0$

Equivalent Circuit Representation of the Telegrapher's Equations for Lossy Line

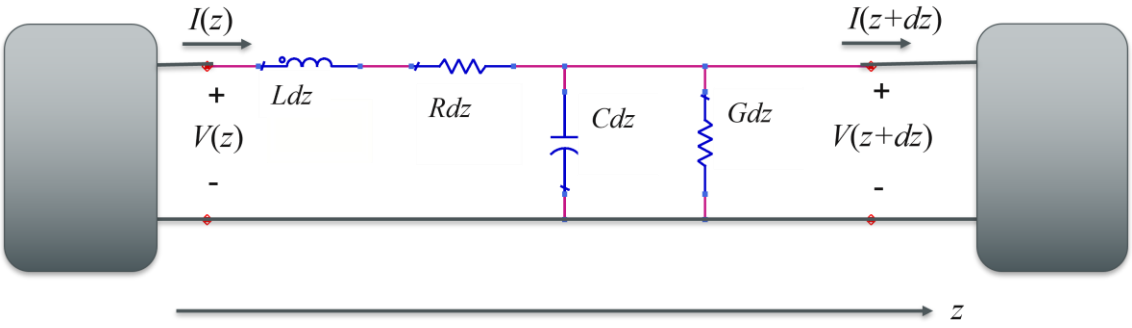

Accounts for both dielectric and conductor loss.

Equivalent Circuit Representation of the Telegrapher's Equations – General Case

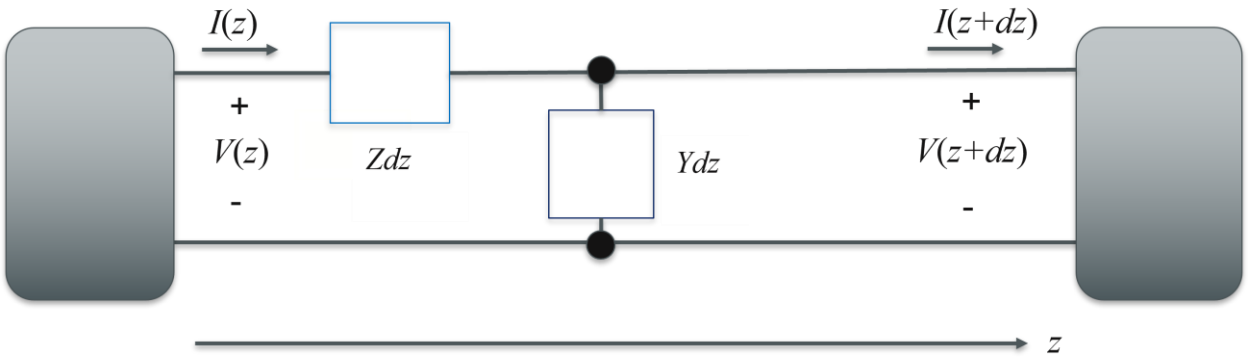

Can be used to model even some very exotic structures.

1. Equivalent Circuit Representation of the Telegrapher's Equations for Lossy Line

- Admittance per unit length:

$$Y = G + j\omega C$$

- Impedance per unit length:

$$Z = R + j\omega L$$

2. Equivalent Circuit Representation of the Telegrapher's Equations – General Case

$$V(z) - V(z + dz) = ZdzI(z)$$

$$\frac{V(z + dz) - V(z)}{dz} = -ZI(z)$$

$$I(z) - I(z + dz) = YdzV(z + dz)$$

$$\frac{I(z + dz) - I(z)}{dz} = -YV(z + dz)$$

3. Equivalent Circuit Representation of the Telegrapher's Equations – General Case

- Take the limit as $dz \rightarrow 0$:

$$\boxed{\frac{dV}{dz} = -ZI}$$

$$\boxed{\frac{dI}{dz} = -YV}$$

The telegrapher's equations apply to any distributed circuit which can be characterized in terms of a series impedance per unit length and a shunt admittance per unit length.

Wave Equations and Solutions - From Telegrapher's Equations – General Case

$$\frac{d^2V}{dz^2} = -Z\frac{dI}{dz} = ZYV \quad \Rightarrow \quad \frac{d^2V}{dz^2} - \gamma^2 V = 0$$

$$\boxed{V(z) = V_0^+ e^{-\gamma z} + V_0^- e^{+\gamma z}}$$

$$\gamma = \sqrt{ZY} = \alpha + j\beta$$

$$I(z) = \frac{-1}{Z}\frac{dV(z)}{dz} = \frac{\gamma}{Z}V_0^+ e^{-\gamma z} - \frac{\gamma}{Z}V_0^- e^{\gamma z}$$

$$\boxed{I(z) = \frac{V_0^+}{Z_0}e^{-\gamma z} - \frac{V_0^-}{Z_0}e^{\gamma z}}$$

$$Z_0 = \sqrt{\frac{Z}{Y}}$$

Special Cases: Lossless Line

- Lossless line: $R = G = 0$

$$\gamma = \sqrt{ZY} = j\omega\sqrt{LC} \quad \Rightarrow \quad \begin{aligned} \alpha &= 0 \\ \beta &= \omega\sqrt{LC} \\ v_p &= \frac{1}{\sqrt{LC}} \end{aligned}$$

$$Z_0 = \sqrt{\frac{Z}{Y}} = \sqrt{\frac{L}{C}}$$

Special Cases: Low Loss Line

- Low loss line: $R \ll \omega L \quad G \ll \omega C$

$$\gamma = \sqrt{(R + j\omega L)(G + j\omega C)} = \sqrt{RG + j\omega(GL + RC) - \omega^2 LC}$$

$$= j\omega\sqrt{LC}\left[1 - \frac{j\omega(GL + RC) + RG}{\omega^2 LC}\right]^{\frac{1}{2}}$$

$$\approx j\omega\sqrt{LC}\left[1 - \frac{j\omega(GL + RC) + RG}{2\omega^2 LC}\right]$$

1. Special Cases: Low Loss Line

$$\approx j\omega\sqrt{LC}\left[1-\frac{j\omega(GL+RC)}{2\omega^2 LC}\right]$$

$$\approx j\omega\sqrt{LC}\left[1-j\frac{1}{2\omega}\left(\frac{G}{C}+\frac{R}{L}\right)\right] \Rightarrow$$

$$\alpha \approx \frac{1}{2}\left(R\sqrt{\frac{C}{L}}+G\sqrt{\frac{L}{C}}\right)$$

$$\beta \approx \omega\sqrt{LC}$$

$$v_p \approx \frac{1}{\sqrt{LC}}$$

2. Special Cases: Low Loss Line

$$Z_0 = \sqrt{\frac{R + j\omega L}{G + j\omega C}} \approx \sqrt{\frac{L}{C}}$$

The low loss case is modeled as the lossless case except for the inclusion of attenuation as the wave propagates.

Question

- For the low loss case, we can generally ignore the imaginary part of the characteristic impedance (i.e., the phase difference between voltage and current) but not the real part of the propagation constant (i.e.,the attenuation constant). Why?

Special Cases: Distortionless Line

- Distortionless line: $\frac{R}{L} = \frac{G}{C} \quad \Rightarrow \quad G = \frac{RC}{L}$

$$\gamma = \sqrt{(R + j\omega L)(G + j\omega C)} = \sqrt{(R + j\omega L)\left(\frac{RC}{L} + j\omega C\right)}$$

$$= \sqrt{\frac{C}{L}}(R + j\omega L) \quad \Rightarrow \quad \begin{aligned} \alpha &= R\sqrt{\frac{C}{L}} \\ \beta &= \omega\sqrt{LC} \\ v_p &= \frac{1}{\sqrt{LC}} \end{aligned}$$

3. Special Cases: Distortionless Line

$$Z_0 = \sqrt{\frac{R + j\omega L}{G + j\omega C}} = \sqrt{\frac{R + j\omega L}{\frac{RC}{L} + j\omega C}} = \sqrt{\frac{L}{C}}$$

The line is called ***distortionless*** because both phase velocity and attenuation constant are constants over frequency – so a finite bandwidth signal suffers no dispersion.

Transmission Line Parameter for Some Common Lines

TABLE 2.1 Transmission Line Parameters for Some Common Lines

	COAX	TWO-WIRE	PARALLEL PLATE
	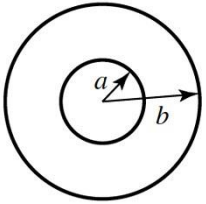	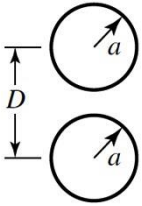	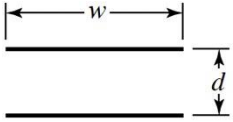
L	$\frac{\mu}{2\pi}\ln\frac{b}{a}$	$\frac{\mu}{\pi}\cosh^{-1}\left(\frac{D}{2a}\right)$	$\frac{\mu d}{w}$
C	$\frac{2\pi\epsilon'}{\ln b/a}$	$\frac{\pi\epsilon'}{\cosh^{-1}(D/2a)}$	$\frac{\epsilon' w}{d}$
R	$\frac{R_s}{2\pi}\left(\frac{1}{a}+\frac{1}{b}\right)$	$\frac{R_s}{\pi a}$	$\frac{2R_s}{w}$
G	$\frac{2\pi\omega\epsilon''}{\ln b/a}$	$\frac{\pi\omega\epsilon''}{\cosh^{-1}(D/2a)}$	$\frac{\omega\epsilon'' w}{d}$

Table 2.1

© John Wiley & Sons, Inc. All rights reserved.

Comment on Transmission Line Parameters

- If the dielectric material comprising the transmission line has both DC conductivity (free electrons) and loss tangent (phase delay in response of electric dipoles), then we can modify the expressions for conductance per unit length (G):

$$\omega\varepsilon'' \leftarrow \sigma + \omega\varepsilon''$$

Summary

- Practical transmission lines exhibit both dielectric and conductor loss.
- These loss mechanisms can be modeled in the equivalent circuit representation of the telegrapher's equations.
- Closed-form expressions for the transmission line parameters for common transmission media have been compiled.

Ira A. Fulton Schools of Engineering

Arizona State University