Properties of the Smith Chart

James T. Aberle, Ph.D.
Associate Professor Emeritus

School of ECEE

Ira A. Fulton Schools of Engineering
Arizona State University

Lecture Objective

- By the end of this lecture, you will be able to:
  - Use the Smith chart to analyze transmission line problems.

Location of Impedance Point on the Smith Chart

- Consider a point on the Smith chart.
- A circle of constant radius centered at the origin represents a circle of $|\Gamma|$ = constant.
- The angle of the reflection coefficient θ_Γ is the angle of a line drawn from the origin to the point with the positive real axis.

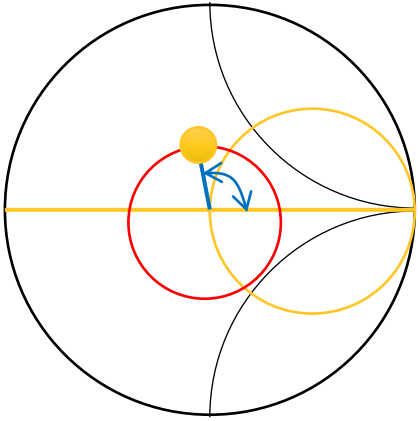

Rotation of Impedance on the Smith Chart

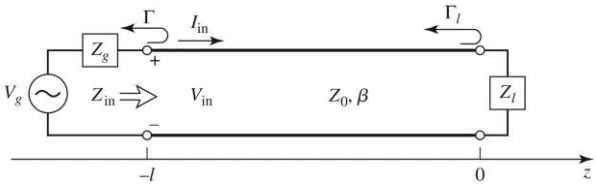

Figure 2.19
© John Wiley & Sons, Inc. All rights reserved.

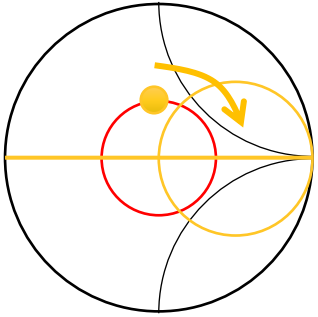

"Toward generator"

On a lossless transmission line:

$$\Gamma(z) = \Gamma(0)e^{j2\beta z} = |\Gamma_L| e^{j(\theta_\Gamma - 2\beta|z|)}$$

$$\langle \Gamma(z) = \theta_\Gamma - 2\beta|z|$$

Periodicity of rotation:

$$2\beta\Delta z = 2\pi \rightarrow \Delta z = \lambda/2$$

SWR on the Smith Chart

- Recall that SWR is given by

$$S = \frac{1+|\Gamma(z)|}{1-|\Gamma(z)|} \qquad \Rightarrow |\Gamma(z)| = \frac{S-1}{S+1}$$

- At the point where the $|\Gamma|$ circle intersects the positive real axis, we have

$$z = r \qquad \Rightarrow \quad |\Gamma(z)| = \frac{r-1}{r+1}$$

- Substituting we obtain

$$S = r$$

2. SWR on the Smith Chart

- The implication of the result above is that we can evaluate the SWR by noting the value of r at the point where the circle of constant $|\Gamma|$ intersects the positive real axis on the Smith chart.

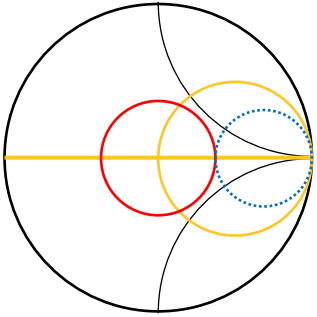

Voltage Maxima and Minima on the Smith Chart

- The point where the circle of constant $|\Gamma|$ intersects the positive real axis is the location on the line of the voltage maximum.
- The point where the circle of constant $|\Gamma|$ intersects the negative real axis is the location on the line of the voltage minimum.

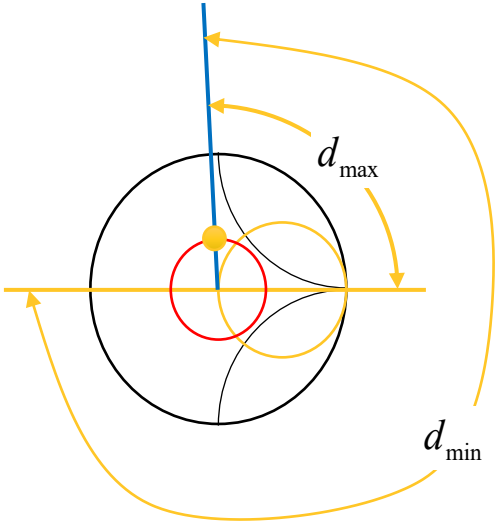

Admittance on the Smith Chart

- The Smith Chart can be used for normalized admittance $y = g + jb$ in the same way that is used for normalized impedance.
- The relationship between normalized admittance and normalized impedance is

$$y = \frac{1}{z}$$

- This is the same relationship as for an impedance that is 'moved' on a circle of constant Γ by $\lambda/4$.

Finding Admittance Using the Smith Chart

- Thus, we can obtain the value of the normalized admittance (impedance) of a given normalized impedance (admittance) value by ‘imaging’ the point across the center of the Smith chart onto the same constant Γ circle.

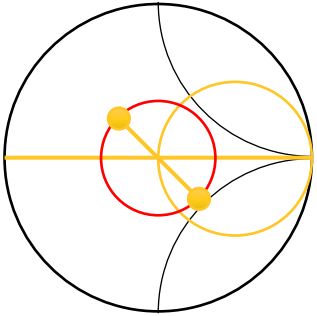

Admittance Chart

- Thus, a Smith chart can be used as either an impedance chart or an admittance chart, and sometimes differently in different stages in a calculation.
- More technically speaking, an admittance chart is a mapping between normalized admittance and complex current reflection coefficient.
- For us, the default will be to use the Smith chart as an impedance chart.

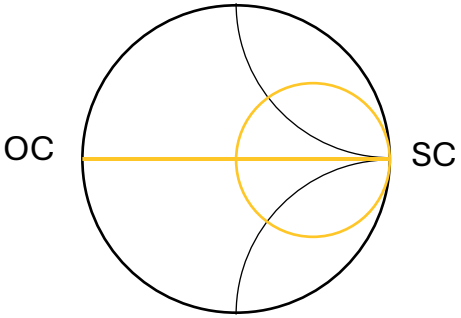

Admittance chart

Impedance/Admittance Chart

- We can also use a Smith chart as an impedance chart with both impedance and admittance coordinates. In this case, the impedance and admittance coordinates are both shown and are consistent with each other.
- We will use the Smith chart in this way frequently.

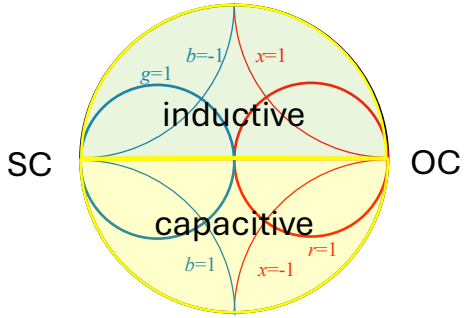

How Things 'Move' on the Smith Chart: Series RLC

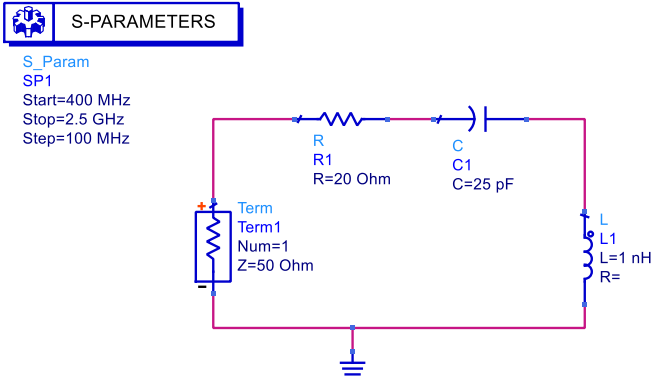

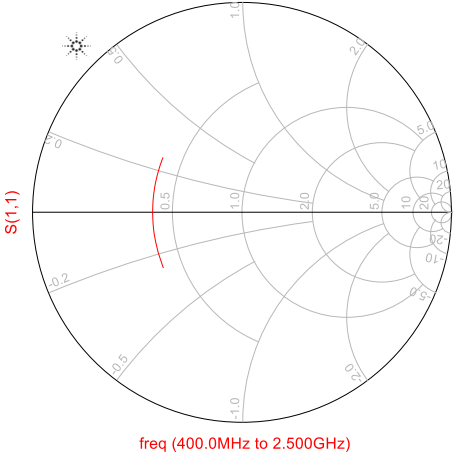

How Things 'Move' on the Smith Chart: Parallel RLC

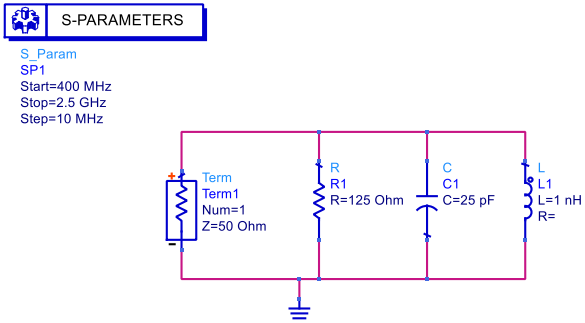

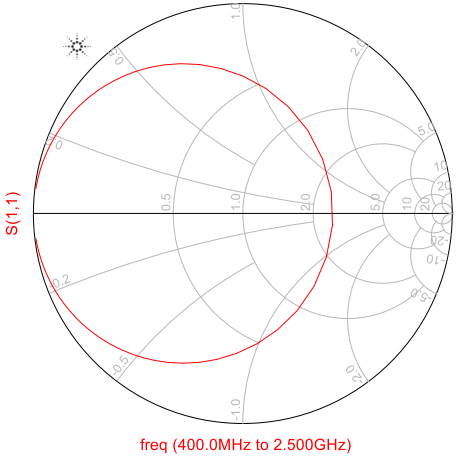

How Things ‘Move’ on the Smith Chart: Lossless Transmission Line Terminated in Resistive Load

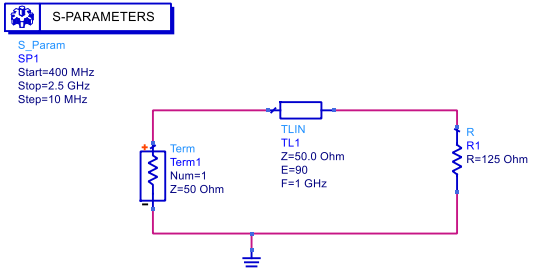

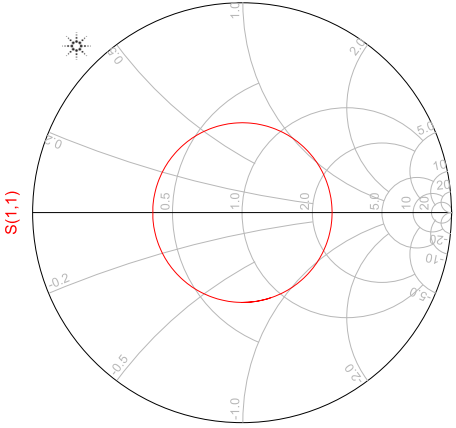

Ira A. Fulton Schools of Engineering

Arizona State University