Impedance Matching – Part 1

James T. Aberle, Ph.D.
Associate Professor Emeritus

School of ECEE

Ira A. Fulton Schools of Engineering
Arizona State University

Lecture Objective

- By the end of this lecture, you will be able to:
  - Understand basic matching network (MN) concepts;
  - Create quarter-wave transformer (QWT) MNs for matching a load impedance to a reference impedance.

Typical Transmission Line Circuit

- A generator is connected to a load through a transmission line.
- For maximum power transfer,

$$Z_{in} = Z_g^*$$

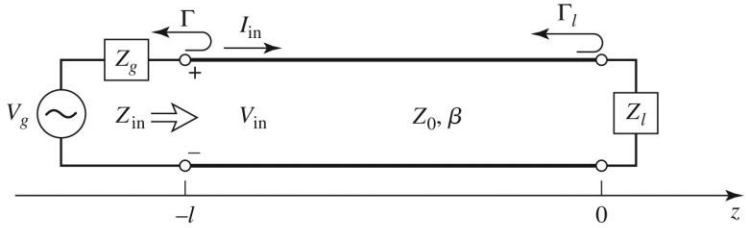

Figure 2.19
© John Wiley & Sons, Inc. All rights reserved.

Usual Impedance Matching Philosophy (1 of 2)

- Both the generator and the load impedances are matched to the characteristic impedance of the line.
- Advantages:
  - Match is not dependent on the specific length of the transmission line.
  - The SWR on the line is (ideally) unity, so losses are reduced.
  - Decouples the designs of load and generator MNs.

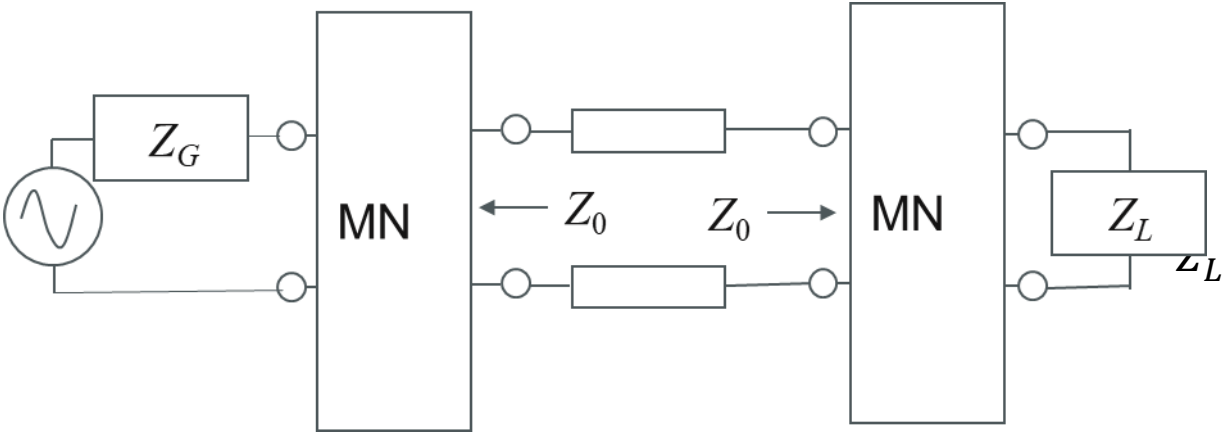

Usual Impedance Matching Philosophy (2 of 2)

- Thus, we can focus on understanding various forms of impedance matching networks that will allow us to convert Z_L to Z_0.

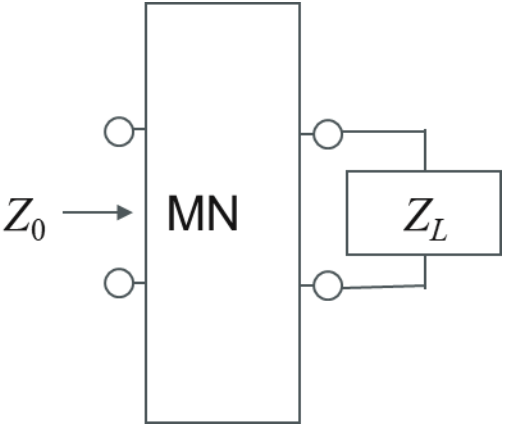

Limitations of Matching

1. A “perfect” match can be achieved only at a finite number of discrete frequency points, as the frequency deviates from these points the match degrades.
2. High *Q* loads are “harder” to match than low *Q* loads. By “harder” we mean (1) reduced frequency range over which an acceptable match can be obtained, and (2) more sensitivity to component tolerances.
3. MNs introduce additional losses and reduce power efficiency.

Matching Using the Smith Chart As a "Game"

- The objective of the game is to 'move' an arbitrary load impedance (represented as a point on the Smith chart) to the center of the Smith chart while obeying certain rules about allowed 'moves'.
- One allowed 'move' is to jump from a point on the real axis to the center of the Smith chart. This move corresponds to the use of a quarter-wave transformer.
- Other allowed moves:
  1. A point can be moved along a circle of constant $|\Gamma|$.
  2. A point can be moved along a circle of constant r.
  3. A point can be moved along a circle of constant g.
- These moves correspond to (1) accessing the terminated transmission line at various points, and attaching (2) series reactance or (3) shunt susceptance.

Quarter-Wave Transformer Matching (1 of 2)

- If the load impedance is real, then a quarter-wave section can be inserted directly between the load and the 'main' transmission line. The characteristic impedance of the quarter-wave section is given by

$$Z_{02} = \sqrt{Z_L Z_0}$$

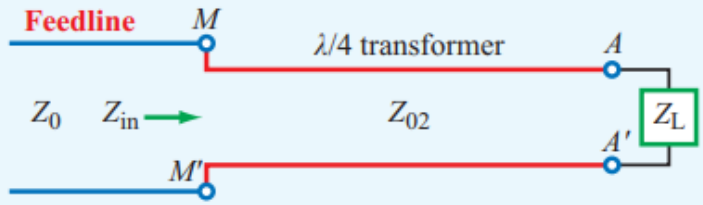

(a) If Z_L is real: in-series $\lambda/4$ transformer inserted at AA'

Quarter-Wave Transformer Matching (2 of 2)

- If the load impedance is complex, then a section of line can be inserted to ‘move (toward the generator)’ the load impedance to a real value, and then a quarter-wave section can be inserted directly between the load the ‘main’ transmission line.

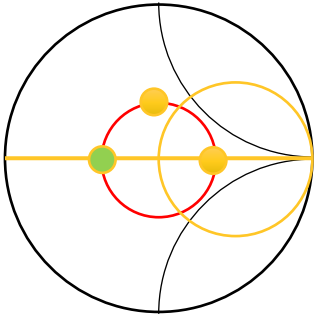

Notice that there is a second solution. The first solution is “better” since solutions with shorter line lengths tend to be preferred because of lower losses and wider bandwidths.

Quarter-Wave Transformer Matching

- First solution:

$$d = d_{\max}$$

$$Z_{02} = \sqrt{Z(d_{\max})Z_{01}}$$

- Second solution:

$$d = d_{\min}$$

$$Z_{02} = \sqrt{Z(d_{\min})Z_{01}}$$

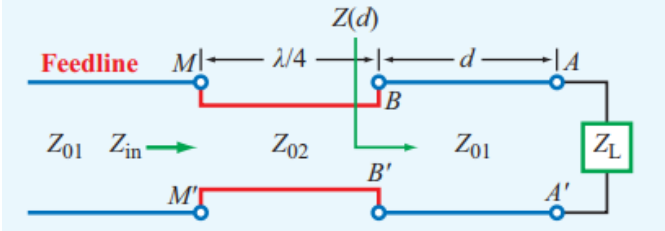

(b) If Z_L = complex: in-series $\lambda/4$ transformer inserted at $d = d_{\max}$ or $d = d_{\min}$

Quarter-Wave Transformer Matching Example (1 of 2)

Obtain a perfect match at 1 GHz

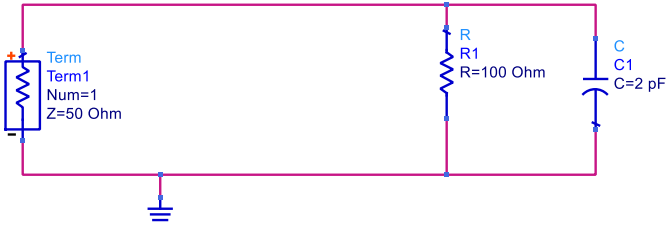

freq	S(1,1)
900.0 MHz	0.471 / -69.173
910.0 MHz	0.473 / -69.697
920.0 MHz	0.475 / -70.216
930.0 MHz	0.478 / -70.731
940.0 MHz	0.480 / -71.242
950.0 MHz	0.482 / -71.748
960.0 MHz	0.485 / -72.250
970.0 MHz	0.487 / -72.748
980.0 MHz	0.489 / -73.241
990.0 MHz	0.491 / -73.731
1.000 GHz	0.494 / -74.216
1.010 GHz	0.496 / -74.697
1.020 GHz	0.498 / -75.175
1.030 GHz	0.501 / -75.648
1.040 GHz	0.503 / -76.118
1.050 GHz	0.505 / -76.583
1.060 GHz	0.507 / -77.045
1.070 GHz	0.510 / -77.503
1.080 GHz	0.512 / -77.958
1.090 GHz	0.514 / -78.408
1.100 GHz	0.517 / -78.856

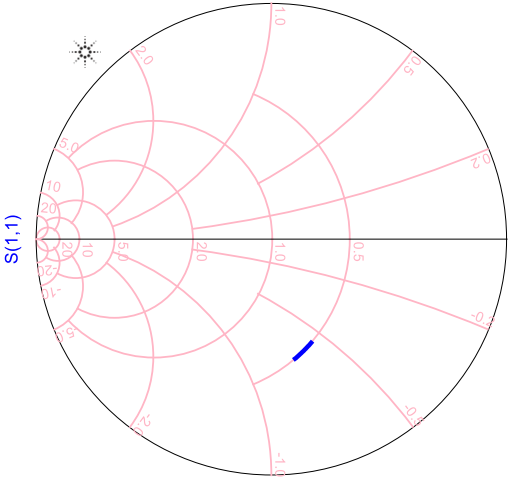

Quarter-Wave Transformer Matching Example (2 of 2)

- Insert the shortest length of line that 'moves' the impedance to a real value. This will occur in this case when the reflection coefficient has an angle of -180 degrees. The additional phase lag required is 105.8 degrees, corresponding to a line length of 52.9 electrical degrees.
- We note that there is another solution obtained by moving the impedance to a point where the reflection coefficient has an angle of 0 degrees.

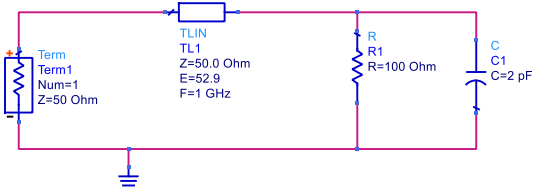

freq	Zin1
900.0 MHz	18.280 - j5.951
910.0 MHz	18.117 - j5.353
920.0 MHz	17.960 - j4.756
930.0 MHz	17.811 - j4.160
940.0 MHz	17.668 - j3.564
950.0 MHz	17.532 - j2.969
960.0 MHz	17.403 - j2.374
970.0 MHz	17.279 - j1.779
980.0 MHz	17.162 - j1.184
990.0 MHz	17.051 - j0.589
1.000 GHz	16.945 + j0.006
1.010 GHz	16.846 + j0.602
1.020 GHz	16.752 + j1.198
1.030 GHz	16.664 + j1.794
1.040 GHz	16.581 + j2.391
1.050 GHz	16.504 + j2.989
1.060 GHz	16.432 + j3.588
1.070 GHz	16.365 + j4.188
1.080 GHz	16.304 + j4.790
1.090 GHz	16.248 + j5.392
1.100 GHz	16.197 + j5.997

Quarter-Wave Transformer Matching Example

- Insert a quarter-wave section with characteristic impedance

$$Z_Q = \sqrt{16.9 \times 50} = 29.1\Omega$$

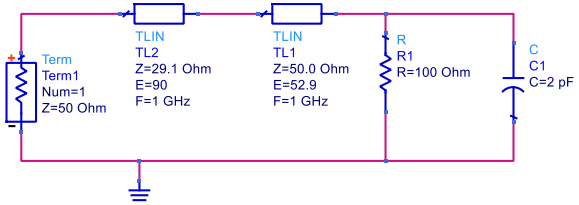

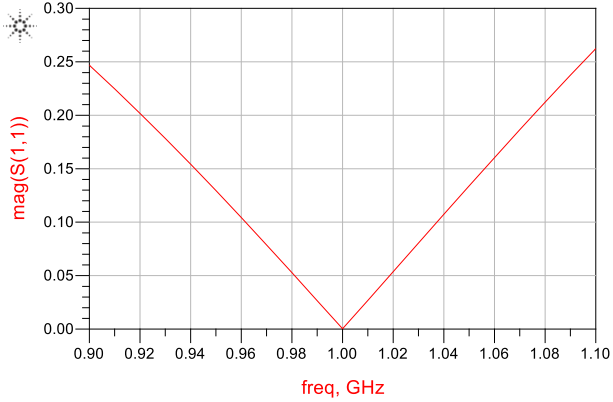

Ira A. Fulton Schools of Engineering

Arizona State University