TE Modes in Rectangular Waveguide

James T. Aberle, Ph.D.
Associate Professor Emeritus

School of ECEE

Ira A. Fulton Schools of Engineering
Arizona State University

Lecture Objective

By the end of this lecture, you will be prepared to:

- Evaluate the characteristics of TE modes in rectangular waveguide.
- Analyze the dominant TE10 mode of rectangular waveguide.

TE Guided Wave Eigenmodes

- Eigenmodes are solutions to:

$$\left(\nabla_t^{\,2} + k_c^{\,2}\right)\tilde{h}_z = 0 \quad + BCs$$

(1)

$$\tilde{e}_x = -\frac{1}{k_c^{\,2}}\left(j\omega\mu\frac{\partial\tilde{h}_z}{\partial y}\right)$$

$$\tilde{e}_y = -\frac{1}{k_c^{\,2}}\left(-j\omega\mu\frac{\partial\tilde{h}_z}{\partial x}\right)$$

$$\tilde{h}_x = -\frac{1}{k_c^{\,2}}\left(\gamma\frac{\partial\tilde{h}_z}{\partial x}\right)$$

$$\tilde{h}_y = -\frac{1}{k_c^{\,2}}\left(\gamma\frac{\partial\tilde{h}_z}{\partial y}\right)$$

(2)

EVP for TE Modes

- DE: $$\frac{\partial^2 \tilde{h}_z(x,y)}{\partial x^2} + \frac{\partial^2 \tilde{h}_z(x,y)}{\partial y^2} + k_c^{\,2} \tilde{h}_z(x,y) = 0$$
- BCs on h_z must be derived from BCs on e_x and e_y:

$$\tilde{e}_y(x=0,y) = \tilde{e}_y(x=a,y) = 0$$

$$\tilde{e}_x(x,y=0) = \tilde{e}_x(x,y=b) = 0$$

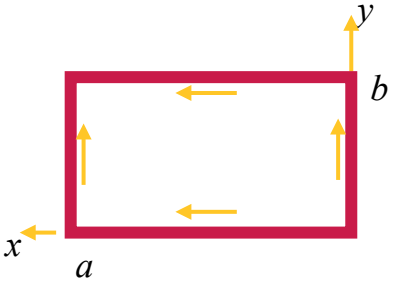

BCs for TE Modes

- Transverse electric field components for TE modes:

$$\tilde{e}_x = -\frac{j\omega\mu}{k_c^{\,2}}\frac{\partial \tilde{h}_z}{\partial y}$$

$$\tilde{e}_y = \frac{j\omega\mu}{k_c^{\,2}}\frac{\partial \tilde{h}_z}{\partial x}$$

- Thus

$$\frac{\partial \tilde{h}_z}{\partial x}(x=0,y) = \frac{\partial \tilde{h}_z}{\partial x}(x=a,y) = 0$$

$$\frac{\partial \tilde{h}_z}{\partial y}(x,y=0) = \frac{\partial \tilde{h}_z}{\partial y}(\mathrm{x},y=b) = 0$$

Solution Technique: Separation of Variables (1 of 3)

- Separated DEs:

$$\frac{d^2X(x)}{dx^2} + k_x{}^2 X(x) = 0$$

$$\frac{d^2Y(y)}{dy^2} + k_y{}^2 Y(y) = 0$$

- Constraint equation:

$$k_x{}^2 + k_y{}^2 = k_c{}^2$$

- Separated BCs:

$$X'(0) = X'(a) = 0$$

$$Y'(0) = Y'(b) = 0$$

Solution Technique: Separation of Variables (2 of 3)

- Separated EVPs:

$$\frac{d^2X(x)}{dx^2} + k_x{}^2 X(x) = 0 \qquad \frac{d^2Y(y)}{dy^2} + k_y{}^2 Y(y) = 0$$

$$X'(0) = X'(a) = 0 \qquad Y'(0) = Y'(b) = 0$$

Solution Technique: Separation of Variables (3 of 3)

- Solutions to separated EVPs:

$$X(x) = \cos\left(\frac{m\pi}{a}x\right) \qquad Y(y) = \cos\left(\frac{n\pi}{b}y\right)$$

$$k_x = \frac{m\pi}{a}, \quad m = 0,1,2,3,\cdots \qquad k_y = \frac{n\pi}{b}, \quad n = 0,1,2,3,\cdots$$

Solution to EVP for TE Modes (1 of 2)

- Solution to original EVP:

$$\tilde{h}_z(x,y) = \cos\left(\frac{m\pi}{a}x\right)\cos\left(\frac{n\pi}{b}y\right)$$

$$k_c = \sqrt{\left(\frac{m\pi}{a}\right)^2 + \left(\frac{n\pi}{b}\right)^2}, \quad m = 0,1,2,3,\cdots; n = 0,1,2,3,\cdots; m = n \neq 0$$

Solution to EVP for TE Modes (2 of 2)

- Why must we eliminate $m = n = 0$?
- For $m = n = 0$:

$$\tilde{h}_z(x, y) = 1 \quad \Rightarrow \quad E_x = E_y = E_z = H_x = H_y = 0$$

$$k_c = 0 \quad \Rightarrow$$

Only possible for a TEM mode which cannot exist in RWG.

$\Downarrow$

No EM wave

Propagation Constant and Cutoff Frequencies for TE Modes

- Propagation constant:

$$\gamma_{mn} = \sqrt{k_c^{\,2} - k^2} = \sqrt{\left(\frac{m\pi}{a}\right)^2 + \left(\frac{n\pi}{b}\right)^2 - \omega^2 \mu\varepsilon}$$

- Cutoff frequency:

$$k_c = \omega_c \sqrt{\mu\varepsilon} = \sqrt{\left(\frac{m\pi}{a}\right)^2 + \left(\frac{n\pi}{b}\right)^2}$$

$$f_{mn} = \frac{c}{2\sqrt{\mu_r \varepsilon_r}} \sqrt{\left(\frac{m}{a}\right)^2 + \left(\frac{n}{b}\right)^2}$$

Question

What is the ordering by cutoff frequency for the first five modes of WR-90 standard rectangular waveguide?

WR90 | WG16 | R100 - Rectangular Waveguide Size

Waveguide Size

EIA Standard:	WR90
RSCS Standard (British Military):	WG16
IEC Standard:	R100

WR90 Specifications

Recommended Frequency Band:	8.20 to 12.40 GHz
Cutoff Frequency of Lowest Order Mode:	6.557 GHz
Cutoff Frequency of Upper Mode:	13.114 GHz
Dimension:	0.9 Inches [22.86 mm] x 0.4 Inches [10.16 mm]

https://www.everythingrf.com/tech-resources/waveguides-sizes/wr90

Transverse Fields for TE Modes (1 of 2)

- Transverse fields:

$$\tilde{e}_x(x,y) = -\frac{j\omega\mu}{k_c^{\,2}}\frac{\partial \tilde{h}_z}{\partial y} = \frac{j\omega\mu}{\left(\frac{m\pi}{a}\right)^2 + \left(\frac{n\pi}{b}\right)^2}\left(\frac{n\pi}{b}\right)\cos\left(\frac{m\pi}{a}x\right)\sin\left(\frac{n\pi}{b}y\right)$$

$$\tilde{e}_y(x,y) = \frac{j\omega\mu}{k_c^{\,2}}\frac{\partial \tilde{h}_z}{\partial x} = -\frac{j\omega\mu}{\left(\frac{m\pi}{a}\right)^2 + \left(\frac{n\pi}{b}\right)^2}\left(\frac{m\pi}{a}\right)\sin\left(\frac{m\pi}{a}x\right)\cos\left(\frac{n\pi}{b}y\right)$$

Transverse Fields for TE Modes (2 of 2)

- Transverse fields:

$$\tilde{h}_x(x,y) = -\frac{\gamma_{mn}^{TE}}{k_c^{\,2}}\frac{\partial \tilde{h}_z}{\partial x} = \frac{\gamma_{mn}^{TE}}{\left(\frac{m\pi}{a}\right)^2 + \left(\frac{n\pi}{b}\right)^2}\left(\frac{m\pi}{a}\right)\sin\left(\frac{m\pi}{a}x\right)\cos\left(\frac{n\pi}{b}y\right)$$

$$\tilde{h}_y(x,y) = -\frac{\gamma_{mn}^{TE}}{k_c^{\,2}}\frac{\partial \tilde{h}_z}{\partial y} = \frac{\gamma_{mn}^{TE}}{\left(\frac{m\pi}{a}\right)^2 + \left(\frac{n\pi}{b}\right)^2}\left(\frac{n\pi}{b}\right)\cos\left(\frac{m\pi}{a}x\right)\sin\left(\frac{n\pi}{b}y\right)$$

Wave Impedance for TE Modes

- Wave impedance:

$$\gamma_{mn} = jk\sqrt{1-\left(\frac{f_{mn}}{f}\right)^2} = j\omega\sqrt{\varepsilon\mu}\sqrt{1-\left(\frac{f_{mn}}{f}\right)^2}$$

$$Z^{TE} = \frac{\tilde{E}_x}{\tilde{H}_y} = \frac{-\tilde{E}_y}{\tilde{H}_x} = \frac{j\omega\mu}{\gamma_{mn}} = \frac{\eta}{\sqrt{1-\left(\frac{f_{mn}}{f}\right)^2}}$$

Nomenclature for TM and TE Modes

- We designate the TM and TE modes of RWG as TM_{mn} and TE_{mn} respectively.
- The indices m and n specify the variation in x- and y-directions respectively.
- For TM modes: m and n are both positive integers.
- For TE modes: m and n are both non-negative integers but they cannot both be zero.

Dominant Mode of RWG (1 of 2)

- The ‘dominant’ mode of a waveguide is the mode having the lowest cutoff frequency (equivalently the smallest value of cutoff wavenumber).
- The dominant mode of RWG will be the mode with the smallest value of the quantity

$$\left(\frac{m\pi}{a}\right)^2 + \left(\frac{n\pi}{b}\right)^2$$

Dominant Mode of RWG (2 of 2)

- Clearly the dominant mode of RWG is a TE mode with either $m = 0$ **<u>or</u>** $n = 0$.
- By convention $a > b$, so $\pi/a < \pi/b$, and the dominant mode is TE_{10}.
- The cutoff wavenumber, cutoff frequency and propagation constant of the TE_{10} mode are

$$k_c = \frac{\pi}{a} \qquad f_{10} = \frac{c}{2a\sqrt{\mu_r \varepsilon_r}} \qquad \gamma_{10} = j\sqrt{\omega^2 \mu\varepsilon - \left(\frac{\pi}{a}\right)^2}$$

Propagation Constant of TE10 Mode

- In most cases, we use empty RWG (i.e., no dielectric filling).
- For air-filled RWG (treating air as vacuum),

$$\gamma_{10} = j\sqrt{\omega^2 \mu_o \varepsilon_0 - \left(\frac{\pi}{a}\right)^2} = \sqrt{k_0{}^2 - \left(\frac{\pi}{a}\right)^2} = j\beta_{10}$$

$$\beta_{10} = k_0\sqrt{1 - \left(\frac{f_{10}}{f}\right)^2} \qquad f_{10} = \frac{c}{2a}$$

Fields of TE_{10} Mode (1 of 3)

$$\tilde{e}_x(x,y) = 0$$

$$\tilde{e}_y(x,y) = -j\omega\mu_0\left(\frac{a}{\pi}\right)\sin\left(\frac{\pi}{a}x\right)$$

$$\tilde{e}_z(x,y) = 0$$

$$\tilde{h}_x(x,y) = j\beta_{10}\left(\frac{a}{\pi}\right)\sin\left(\frac{\pi}{a}x\right)$$

$$\tilde{h}_y(x,y) = 0$$

$$\tilde{h}_z(x,y) = \cos\left(\frac{\pi}{a}x\right)$$

Fields of TE_{10} Mode (2 of 3)

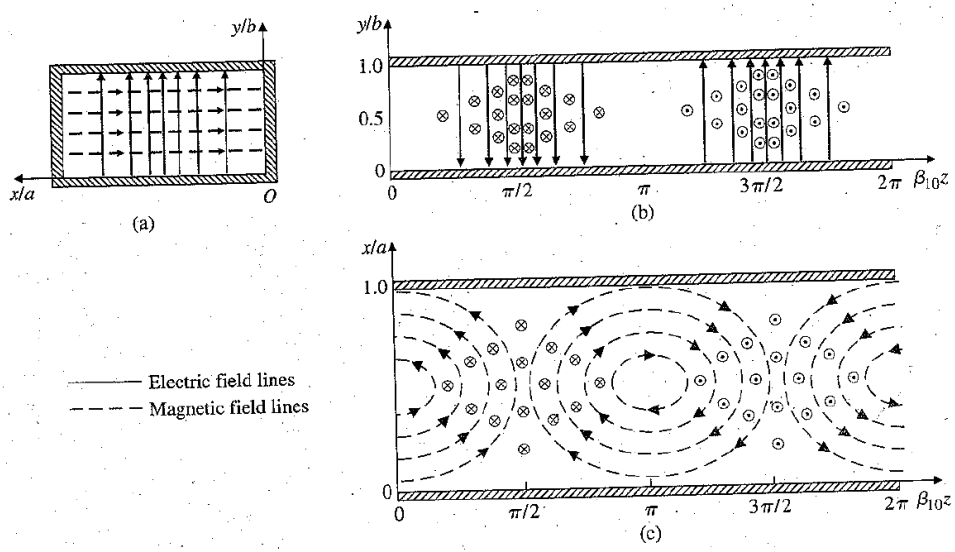

FIGURE 9-5 Field lines for TE_{10} mode in rectangular waveguide.

© Addison-Wesley

Fields of TE_{10} Mode (3 of 3)

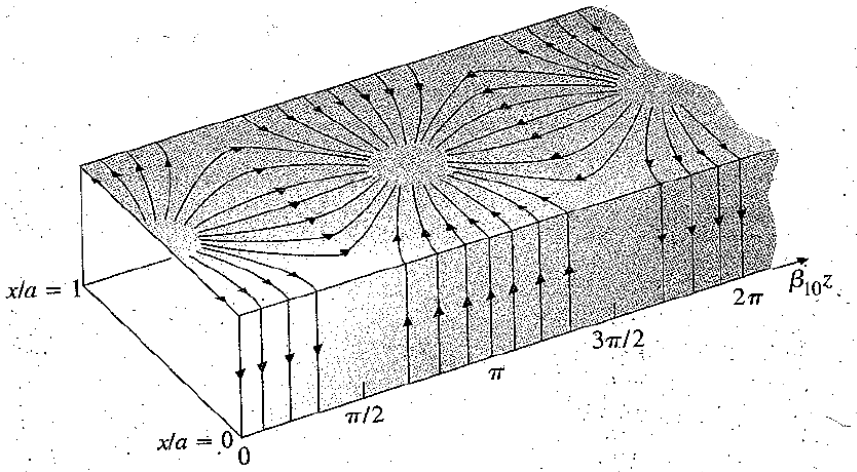

FIGURE 9-6 Surface currents on guide walls for TE_{10} mode in rectangular waveguide.

© Addison-Wesley

Attenuation in RWG

- Attenuation results from
  - Dielectric loss
  - Conductor loss
- Above cutoff frequency, when loss is present, the propagation constant has a real part in addition to the imaginary part.

Conductor Loss (1 of 3)

- Assume waveguide walls have conductivity σ and use perturbation approach.
- We have

$$\alpha_c = \frac{P_L(z)}{2P(z)}$$

Time-average power lost in the plates per unit length per unit width.

Time-average power per unit width flowing through a cross-section of the guide.

Conductor Loss (2 of 3)

- For TE_{10} mode:

$$\alpha_{10} = \frac{1}{\eta_0 b}\sqrt{\frac{\pi f \mu_c}{\sigma_c}}\,\frac{\left[1+\frac{2b}{a}\left(\frac{f_{10}}{f}\right)^2\right]}{\sqrt{1-\left(f_{10}/f\right)^2}}$$

$$\gamma_{10} = \alpha_{10} + j\beta_{10}$$

Conductor Loss (3 of 3)

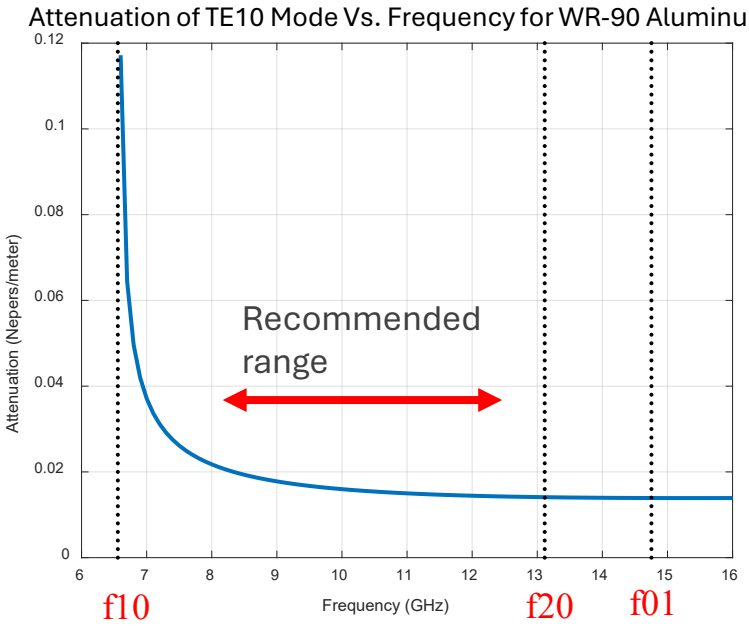

Recommended frequency range is 8.2 to 12.4 GHz

Ira A. Fulton Schools of Engineering

Arizona State University