Radiation By Large-Aperture Antennas

James T. Aberle, Ph.D.
Associate Professor Emeritus

School of ECEE

Ira A. Fulton Schools of Engineering
Arizona State University

Lecture Objective

By the end of this lecture, you will be able to:

- Identify various aperture antennas,
- Evaluate the far-field of a large aperture antenna using Kirchoff's scalar diffraction method.

Aperture Antennas

- Wire antennas are one of the two broad categories of antennas.
- The other broad category of antennas is aperture antennas.
- An aperture is essentially an opening in a metallic structure. (Note that reflector antenna systems are also often classified with the aperture antennas.)
- Among the aperture antennas are waveguide slot arrays, open-ended waveguides, tapered notches (Vivalidi antennas), etc.
- The most common aperture antenna is the flared horn antenna.

Some Aperture Antennas

By FarField - Own work, CC BY-SA 4.0, https://commons.wikimedia.org/w/index.php?curid=66576290

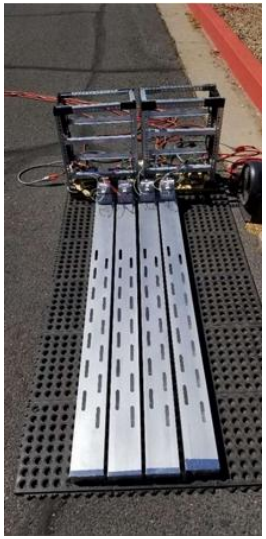

Source of Radiation for Aperture Antennas

- The source of the radiation emanating from an aperture antenna is modeled as the electric field distribution over the aperture.

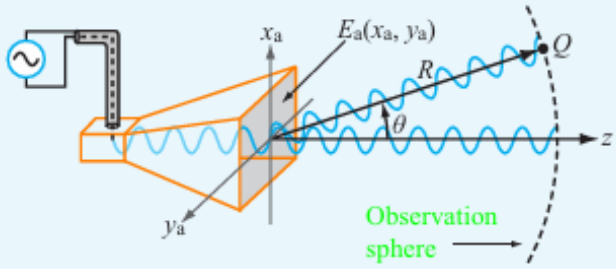

Figure 9-20 A horn antenna with aperture field distribution $E_a(x_a, y_a)$.

Approach for Determining the Radiation from an Aperture Antenna (1 of 2)

- Just as for wire antennas where we assume a certain current distribution along the length of the contour, we assume a certain electric field distribution across the aperture.
- The electric field at each infinitesimal area within the aperture is treated as an isotropic radiator, and then the field at a distant point is computed from the weighted superposition of the fields from these isotropic radiators using ***Kirchoff's scalar diffraction method***.
- This method is approximate but works well for large apertures and far-field observations.
- More accurate results can be obtained using numerical simulation techniques.

Approach for Determining the Radiation from an Aperture Antenna (2 of 2)

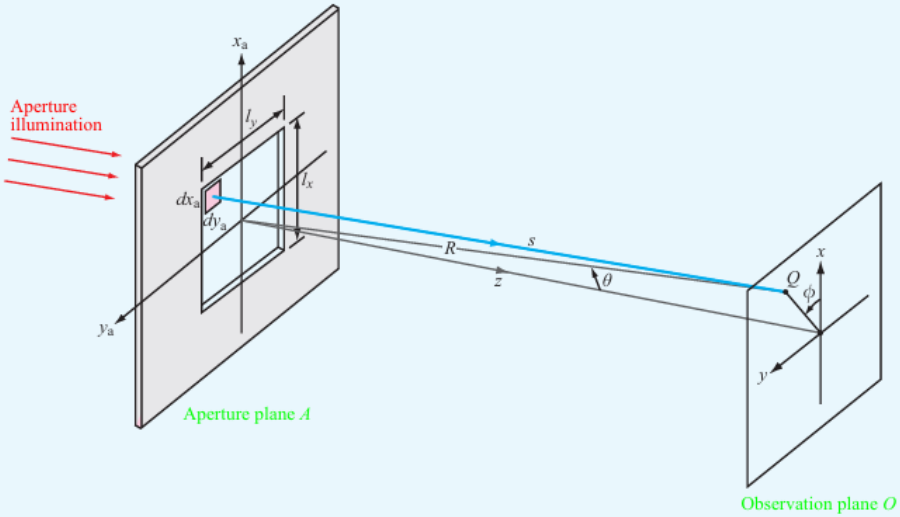

Figure 9-22 Radiation by an aperture in the x_a–y_a plane at $z = 0$.

Scalar Diffraction Method (1 of 2)

- We use Kirchoff's scalar diffraction method to obtain the radiated electric field in the far field region from the aperture electric field as

$$\tilde{E}(Q) = \frac{jk_0}{2\pi}\left(\frac{e^{-jk_0R}}{R}\right)\tilde{h}(\theta,\phi)$$

$$\tilde{h}(\theta,\phi) = \iint\limits_{Aperture} \tilde{E}_a(x_a,y_a)e^{-jk_0\sin\theta(x_a\cos\phi+y_a\sin\phi)}dx_a dy_a$$

Scalar Diffraction Method (2 of 2)

- Kirchoff's scalar diffraction method tells us that the radiated electric field is proportional to the two-dimension spatial Fourier transform of the aperture distribution.
- This method works well provided:
  - The aperture is electrically large (many wavelengths in size)
  - The fields are predominately in one polarization
  - Edge and near field effects can be ignored

Radiation Intensity from Aperture Antenna

- The radiation intensity from the aperture field distribution is given by

$$U(\theta,\phi) = \frac{{k_0}^2}{8\pi^2\eta_0}\left|\tilde{h}(\theta,\phi)\right|^2$$

Uniform Aperture Distribution (1 of 3)

- Let us examine the properties arising from the simplest aperture electric field distribution:

$$\tilde{E}_a(x_a, y_a) = \begin{cases} E_0, & \text{in the aperture} \\ 0, & \text{otherwise} \end{cases}$$

Uniform Aperture Distribution (2 of 3)

$$\tilde{h}(\theta,\phi) = \int_{-\frac{l_y}{2}}^{\frac{l_y}{2}} \int_{\frac{-l_x}{2}}^{\frac{l_x}{2}} E_0 e^{-jk_0 \sin\theta (x_a \cos\phi + y_a \sin\phi)} dx_a dy_a$$

$$= E_0 \int_{-\frac{l_x}{2}}^{\frac{l_x}{2}} e^{-jk_0 x_a \sin\theta \cos\phi} dx_a \int_{\frac{-l_y}{2}}^{\frac{l_y}{2}} e^{-jk_0 y_a \sin\theta \sin\phi} dy_a$$

$$= E_0 \int_{-\frac{l_y}{2}}^{\frac{l_y}{2}} e^{-jk_x x_a} dx_a \int_{\frac{-l_x}{2}}^{\frac{l_x}{2}} e^{-jk_y y_a} dy_a$$

Uniform Aperture Distribution (3 of 3)

Spatial frequencies

$$\boxed{\begin{aligned} k_x &= k_0 u \\ k_y &= k_0 v \end{aligned}}$$

Direction cosines

$$\boxed{\begin{aligned} u &= \sin\theta\cos\phi \\ v &= \sin\theta\sin\phi \end{aligned}}$$

$$\int_{-\frac{l_x}{2}}^{\frac{l_x}{2}} e^{-jk_x x_a} dx_a = \frac{2}{k_x}\sin\left(\frac{k_x l_x}{2}\right) = l_x \frac{\sin\left(\frac{k_x l_x}{2}\right)}{\left(\frac{k_x l_x}{2}\right)} = l_x \operatorname{sinc}\left(\frac{k_x l_x}{2}\right)$$

$$\tilde{h}(\theta,\phi) = E_0 l_x l_y \operatorname{sinc}\left(\frac{k_x l_x}{2}\right)\operatorname{sinc}\left(\frac{k_y l_y}{2}\right) = E_0 A_p \operatorname{sinc}\left(\frac{k_x l_x}{2}\right)\operatorname{sinc}\left(\frac{k_y l_y}{2}\right)$$

Normalized Radiation Intensity and HPBWs for Uniform Aperture Distribution

$$F(\theta,\phi) = \text{sinc}\left(\frac{k_x l_x}{2}\right)\text{sinc}\left(\frac{k_y l_y}{2}\right)$$

$$\left.\frac{k_x l_x}{2}\right|_{\phi=0} = \pi\frac{l_x}{\lambda}\sin\theta = \pi\gamma$$

HPBW

$$\beta_{xz} = 0.88\frac{\lambda}{l_x} \approx \frac{\lambda}{l_x}$$

$$\beta_{yz} = 0.88\frac{\lambda}{l_y} \approx \frac{\lambda}{l_y}$$

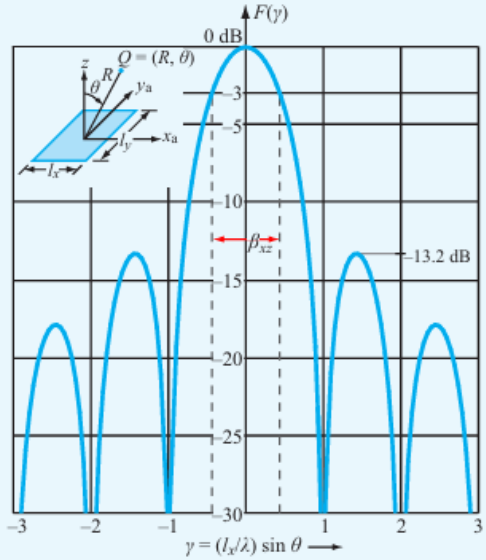

Figure 9-23 Normalized radiation pattern of a uniformly illuminated rectangular aperture in the x–z plane ($\phi = 0$).

Tapered Aperture Distributions

- A tapered aperture distribution results in lower sidelobe levels and wider beamwidth.
- The uniform distribution provides the narrowest possible beamwidth.

Question

Consider an aperture formed from an open-ended rectangular waveguide. We can assume that the field in the aperture is the TE10 mode of the RWG. How does the normalized radiation pattern of this aperture compare to the pattern of the uniform aperture distribution?

Directivity and Effective Area

- Estimate of the directivity of the uniformly illuminated large aperture antenna using the HPBW in each plane:

$$D \approx \frac{4\pi}{\beta_{xz}\beta_{yz}} \approx \frac{4\pi l_x l_y}{\lambda^2} = \frac{4\pi A_p}{\lambda^2}$$

- Compare to the general equation:

$$D = \frac{4\pi A_e}{\lambda^2} \quad \Rightarrow \quad A_e \approx A_p$$

For a uniformly illuminated large aperture antenna, its effective area is about equal to its physical area. For tapered illuminations, the aperture efficiency decreases with increasing taper.

Ira A. Fulton Schools of Engineering

Arizona State University