Z-Transform

Ira A. Fulton Schools of Engineering
Arizona State University

Recall: Difference Equation

- **Any discrete-domain LTI/LSI system can be implemented using a difference equation that describes the input and output relationship:**

$$y[n] = \underbrace{\sum_{l} a_l x[n-l]}_{\text{feed forward}} + \underbrace{\sum_{m \neq 0} b_m y[n-m]}_{\text{feedback}}$$

- **When $b_m = 0$: FIR system, $a_l = h_l$ (impulse response).**

- **When $b_m \neq 0$: IIR system.**

- **When $a_l = 0$ except for a_0: pure IIR system, no feed forward:**

$$y[n] = a_0 x[n] + \sum_{m \neq 0} b_m y[n-m]$$

Z-Transform

- If feedback section is present, it is an IIR system that can become unstable.
- Z-Transform allows to check for stability using the system transfer function.
- Z-Transform is also important for implementations and to represent system as a block diagram for memory and delay estimation.

Z-Transform

- **Z-Transform of *x[n]* is**

$$X(z) = \sum_{n=-\infty}^{+\infty} x[n]z^{-n}$$

- **Do not converge for all *z* values.**

- **Region of convergence (ROC) determines the *z*'s for which *X(z)* is finite.**

Transfer Function

- **Transfer (or system) function of a system is the z−Transform of the impulse response:**

$$H(z) = \sum_{n=-\infty}^{+\infty} h[n]z^{-n}$$

Example

Compute the transfer function of a system with impulse response $h[n] = \left(\frac{1}{2}\right)^n u[n]$**.**

Answer:

- $H(z) = \sum_{n=-\infty}^{+\infty} \left(\frac{1}{2}\right)^n u[n] z^{-n} = \sum_{n=0}^{\infty} \left(\frac{1}{2}\right)^n z^{-n} = \sum_{n=0}^{\infty} \left(\frac{1}{2z}\right)^n = \frac{1}{1-\frac{1}{2}z^{-1}} = \frac{z}{z-\frac{1}{2}}$
- ROC: $\left|\frac{1}{2} z^{-1}\right| < 1, \quad or, |z| > \frac{1}{2}$
- Pole: ½, zero: 0

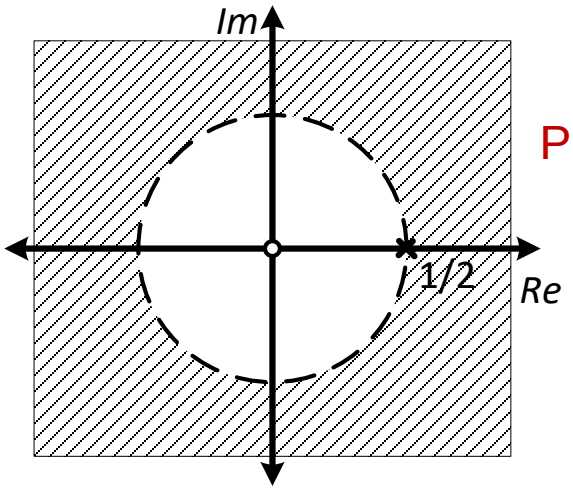

Pole Zero Plot

Transfer Function from Difference Equation

- $y[n] = \sum_l a_l x[n-l] + \sum_{m \neq 0} b_m y[n-m]$
- **Recall time shifting property:** $x[n-l] \overset{z}{\leftrightarrow} X(z)z^{-l}$
- **Take z-Transform on both sides of the difference equation:**
  - $Y(z) = \sum_l a_l X(z) z^{-l} + \sum_{m \neq 0} b_m Y(z) z^{-m}$
  - $H(z) = \frac{Y(z)}{X(z)} = \frac{\sum_l a_l z^{-l}}{1 - \sum_{m \neq 0} b_m z^{-m}}$
- **For finite *l* and *m*,**
  - $H(z) = \frac{A(z)}{1 - B(z)}$

Transfer Function from Difference Equation

- $y[n] = \sum_l a_l x[n-l] + \sum_{m\neq 0} b_m y[n-m]$

  feed forward feedback

- $H(z) = \frac{Y(z)}{X(z)} = \frac{\sum_l a_l z^{-l}}{1-\sum_{m\neq 0} b_m z^{-m}} = \frac{A(z)}{1-B(z)}$

- **Order of the system: highest degree of denominator polynomial *1-B(z).***

- ***H(z)* has zeros, no poles, i.e., $H(z) = A(z)$: FIR system.**

- ***H(z)* has poles, no zeros, i.e., $H(z) = \frac{1}{1-B(z)}$: pure IIR system.**

Example

- For a causal LTI system described by the following difference equation:

$$y[n] = x[n] + 2x[n-1] + 3x[n-2] + 2y[n-1] + y[n-2]$$

- Find the system transfer function.

- What is the order of the system?

Answer

- $y[n] = x[n] + 2x[n-1] + 3x[n-2] + 2y[n-1] + y[n-2]$

- **Take z-transform on both sides of the difference equation:**
  - $Y(z) = X(z) + 2X(z)z^{-1} + 3X(z)z^{-2} + 2Y(z)z^{-1} + Y(z)z^{-2}$
  - $H(z) = \frac{Y(z)}{X(z)} = \frac{1+2z^{-1}+3z^{-2}}{1-2z^{-1}-z^{-2}} = \frac{z^2+2z+3}{z^2-2z-1}$

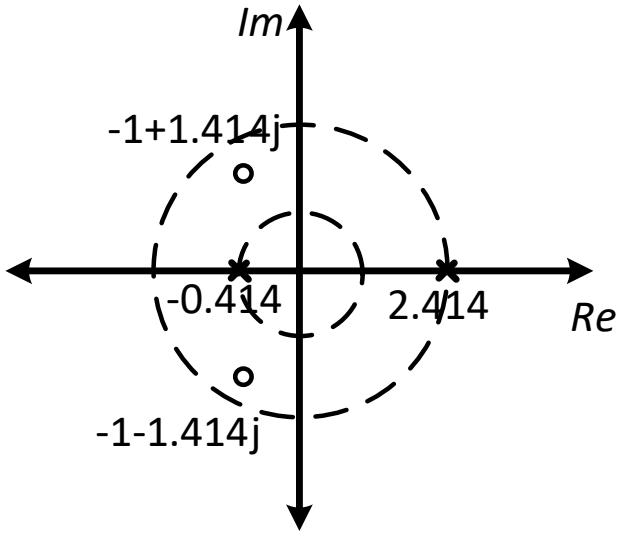

- **Order of the system: 2**

- **Poles:** $1 \pm \sqrt{2}$**; Zeros:** $-1 \pm \sqrt{2}j$

- **ROC:**
  - $|z| > 1 + \sqrt{2}$ or $|z| < \sqrt{2} - 1$ or $\sqrt{2} - 1 < |z| < 1 + \sqrt{2}$
  - To be causal, $|z| > 1 + \sqrt{2}$.

Relationship to Frequency Response

- **Transfer function:**

$$H(z) = \sum_{n=-\infty}^{+\infty} h[n]z^{-n}$$

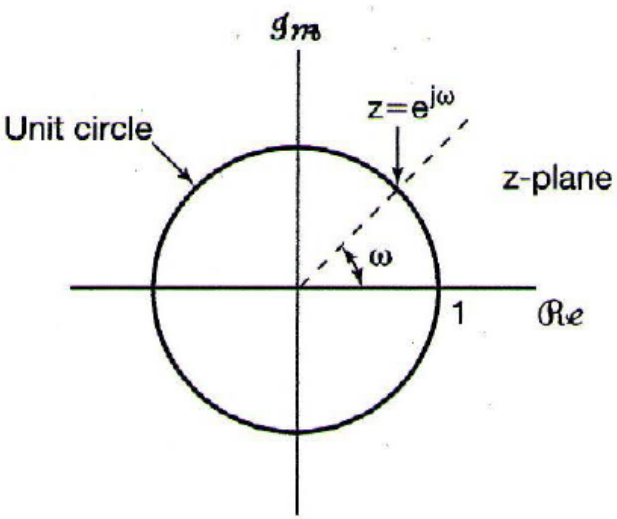

- **Frequency response:**

$$H\left(e^{j\omega}\right) = \sum_{n=-\infty}^{\infty} h[n]e^{-j\omega n} = H(z)|_{z=e^{j\omega}}$$

- **To have valid frequency response, ROC must include the unit circle.**

Stability

Recall: a stable system

$$\sum_{n=-\infty}^{\infty} |h[n]| < \infty$$

$\leftrightarrow H\left(e^{j\omega}\right) = \sum_{n=-\infty}^{\infty} h[n]e^{-j\omega n}$, i.e., Fourier transform converges/exists.

$\leftrightarrow$ ROC of *H(z)* includes the unit circle, i.e., $|z| = 1$.

Problem

Which of the following is NOT correct regarding the transfer function H(z) of an LTI system?

a) For the system to be stable, the ROC of H(z) must exclude the unit circle.

b) For the system to have valid frequency response, the ROC of H(z) must include the unit circle.

c) For the system to be causal, the ROC of H(Z) must be the exterior of a circle outside of the outmost pole and the order of the numerator cannot be greater than the order of the denominator.

d) For the system to be causal and stable, H(z) must have all poles inside the unit circle, i.e., all of the poles have magnitude smaller than 1.

Example

- **Echo:**

$$y[n] = x[n] + ay[n - D]$$

- **Is the system stable?**

Answer

- $y[n] = x[n] + ay[n - D]$
- **Take z-transform on both sides of the difference equation:**
  - $Y(z) = X(z) + aY(z)z^{-D}$
  - $H(z) = \frac{Y(z)}{X(z)} = \frac{1}{1-az^{-D}}, |az^{-D}| < 1,\ or, |z| > \sqrt[D]{|a|}$
- **To be stable, ROC must include the unit circle** $|z| = 1$**.**
- **So** $\sqrt[D]{|a|} < 1, i.e., |a| < 1$**.**

Ira A. Fulton Schools of Engineering

Arizona State University