Block Diagram Representations

Ira A. Fulton Schools of Engineering
Arizona State University

Block Diagram Representations For Causal LTI Systems

Basic elements:

- Adder

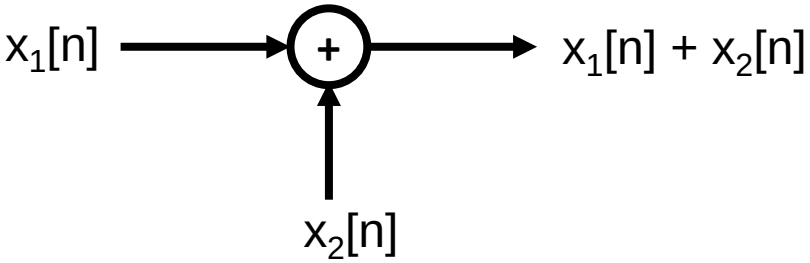

- Scalar

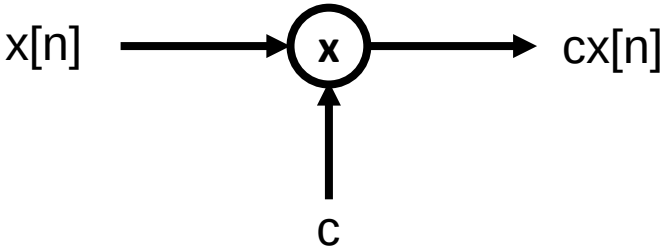

- Delay

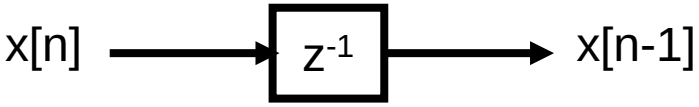

Block Diagram Representations For Causal LTI Systems

- $y[n] = \underbrace{\sum_l a_l x[n-l]}_{\text{feed forward}} + \underbrace{\sum_{m\neq 0} b_m y[n-m]}_{\text{feedback}}$
- $H(z) = \frac{Y(z)}{X(z)} = \frac{\sum_l a_l z^{-l}}{1-\sum_{m\neq 0} b_m z^{-m}} = \frac{A(z)}{1-B(z)}$
- **Direct Form I: an all-zero filter followed by an all-pole filter**
  - $H(z) = \mathrm{A}(\mathrm{z})\frac{1}{1-B(z)}$
- **Direct Form II: an all-pole filter followed by an all-zero filter**
  - $H(z) = \frac{1}{1-B(z)}A(z)$

Example

Represent the following system as a block diagram:

$$y[n] = x[n] + 2x[n-1] + 3x[n-2] + 2y[n-1] + y[n-2]$$

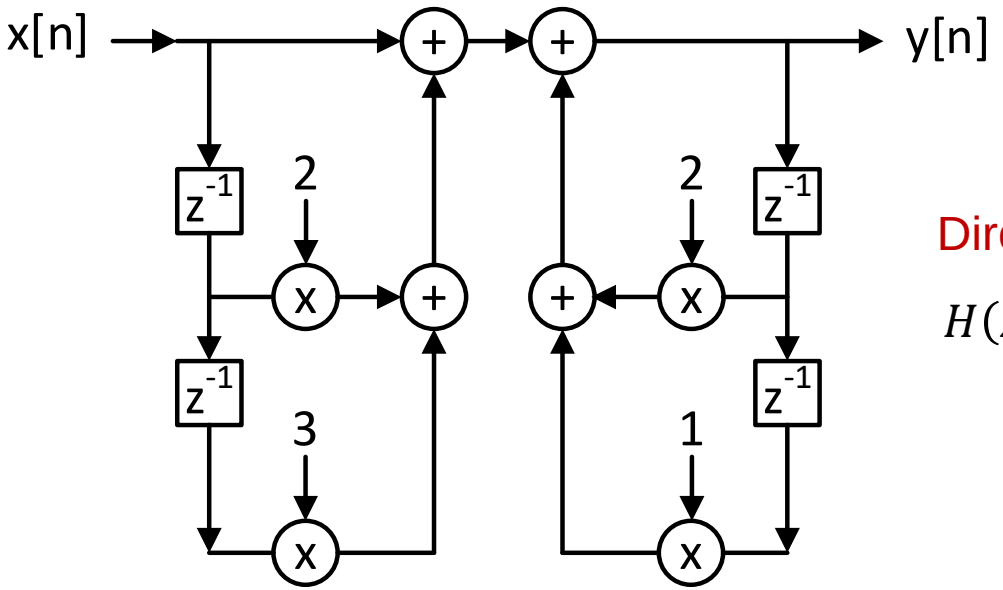

Direct Form I:

$$H(z) = (1 + 2z^{-1} + 3z^{-2})\frac{1}{1 - 2z^{-1} - z^{-2}}$$

$$= A(z)\frac{1}{1 - B(z)}$$

Feed forward: A(z)

Feedback: 1/(1-B(z))

Example

Direct Form I

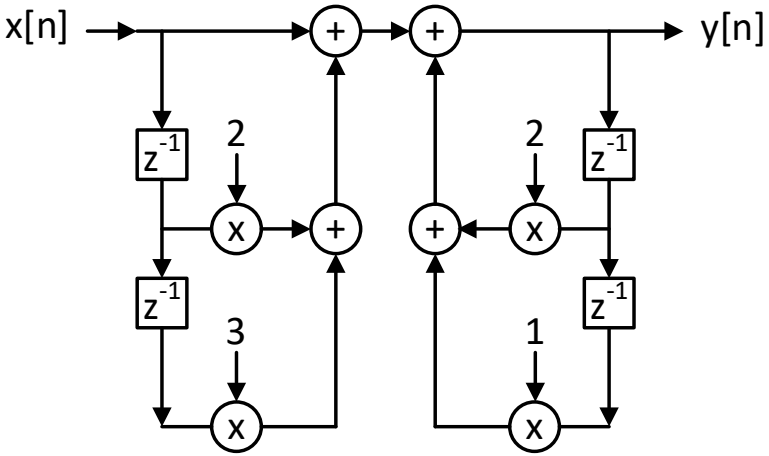

Feed forward Feedback

$$H(z) = (1 + 2z^{-1} + 3z^{-2})\frac{1}{1 - 2z^{-1} - z^{-2}}$$
$$= A(z)\frac{1}{1 - B(z)}$$

Direct Form II

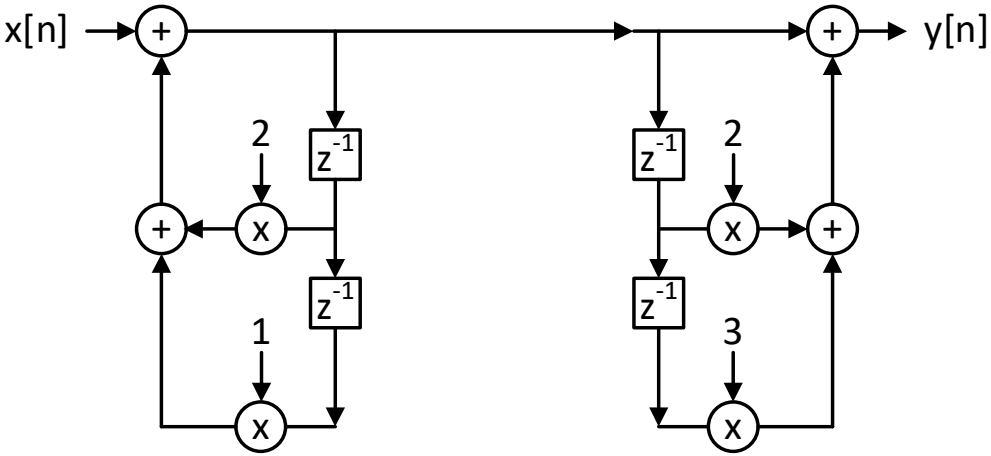

Feedback Feed forward

$$H(z) = \frac{1}{1-2z^{-1}-z^{-2}}(1 + 2z^{-1} + 3z^{-2})$$
$$= \frac{1}{1 - B(z)}A(z)$$

Poles before zeros.
Can have internal overflow.

Example

Direct Form II: combine the storages

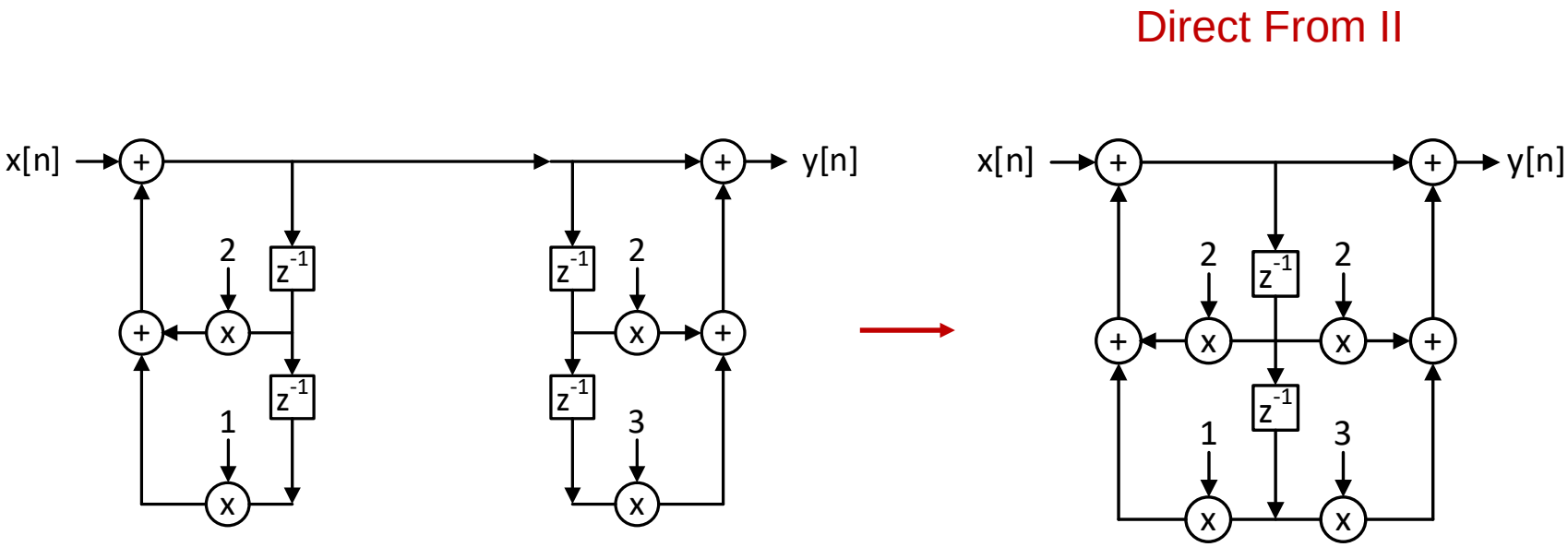

Example

Direct Form I

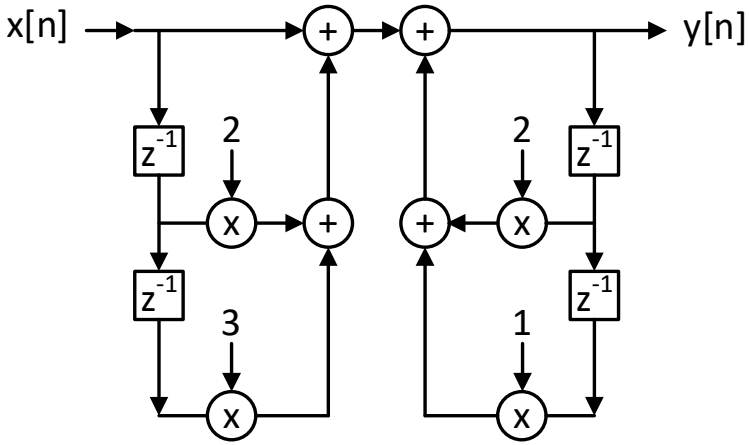

Direct Form II

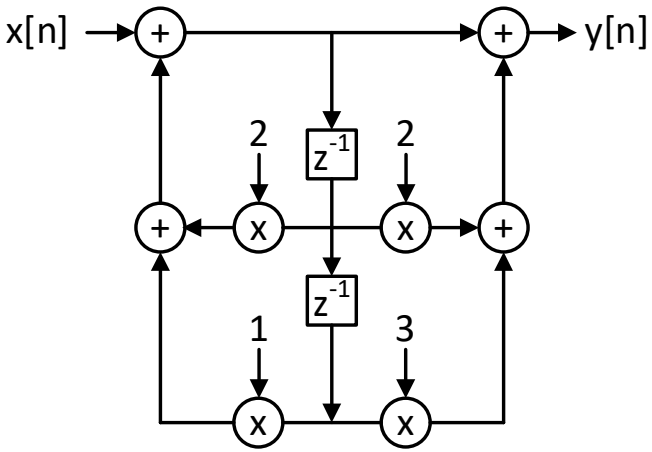

4 storages
3 multiplications
4 additions

2 storages (less storage)
3 multiplications
4 additions

Transposed Direct Form II

Combine the advantages of both Direct Form I and II.

Generate using the following steps:

- Start with Direct Form II.
- Reverse arrows and swap input and output.
- Each adder becomes a branch.

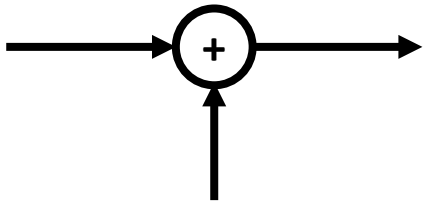

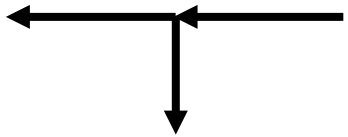

- Each branch becomes an adder.

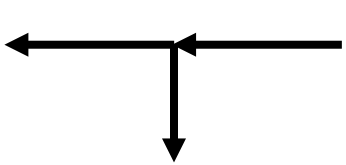

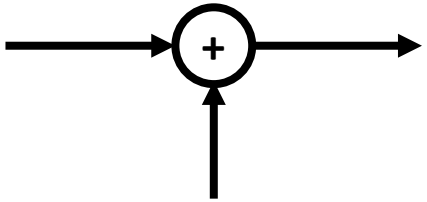

Example

Direct Form II

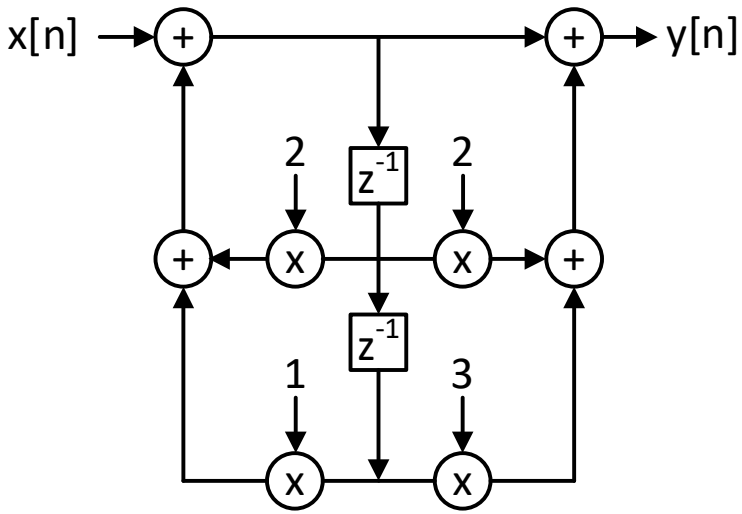

Transposed Direct Form II

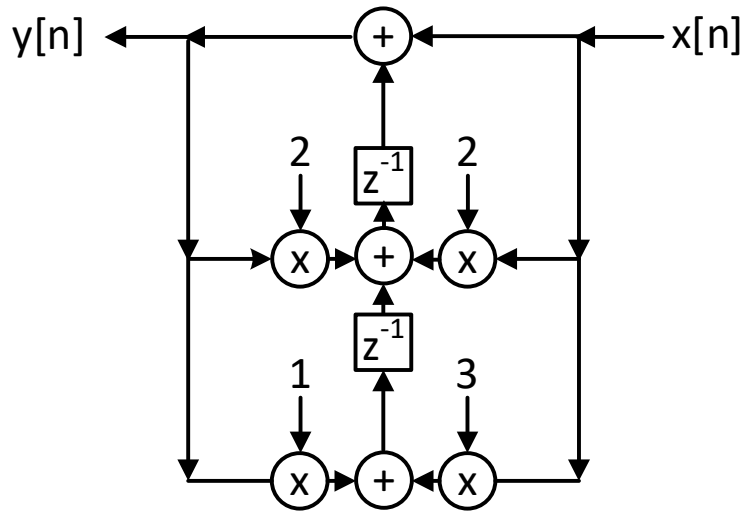

Zeros before poles, no internal overflow
Less storage

Exercise

- **A stable causal LTI system is described by the transfer function:**

$$H(z) = \frac{1 + z^{-1}}{1 - \frac{5}{6}z^{-1} + \frac{1}{6}z^{-2}}$$

- **Find the difference equation describing the input output relationship.**

- **Sketch the pole zero plot of *H(z)* and shade the region of convergence (ROC) in the z complex plane.**

- **Sketch the Direct form I signal-flow diagram of the system and indicate the number of needed storage elements.**

Answer

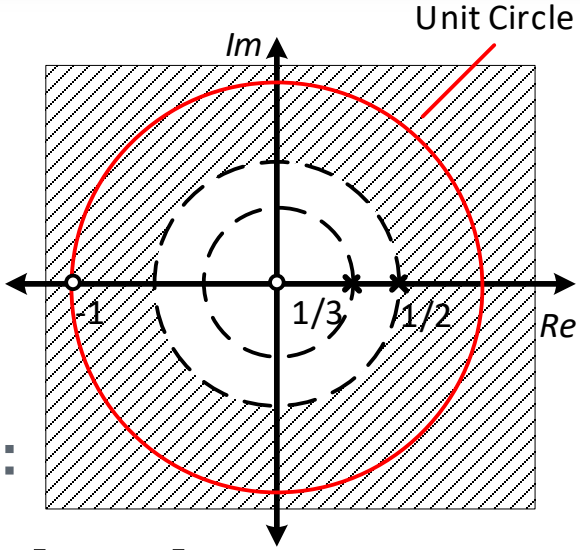

$$H(z) = \frac{Y(z)}{X(z)} = \frac{1+z^{-1}}{1-\frac{5}{6}z^{-1}+\frac{1}{6}z^{-2}}$$

$$Y(z)\left(1-\frac{5}{6}z^{-1}+\frac{1}{6}z^{-2}\right) = X(z)(1+z^{-1})$$

Take the inverse z transform on both sides:

$$y[n]-\frac{5}{6}y[n-1]+\frac{1}{6}y[n-2] = x[n]+x[n-1]$$

$$H(z) = \frac{1+z^{-1}}{1-\frac{5}{6}z^{-1}+\frac{1}{6}z^{-2}} = \frac{1+z^{-1}}{(1-\frac{1}{3}z^{-1})(1-\frac{1}{2}z^{-1})} = \frac{z(z+1)}{(z-\frac{1}{3})(z-\frac{1}{2})}$$

Poles: 1/3, 1/2; zeros: 0, -1

ROC: $|z| > \frac{1}{2}$

Answer

$$y[n] = x[n] + x[n-1] + \frac{5}{6}y[n-1] - \frac{1}{6}y[n-2]$$

Number of storage elements: 3

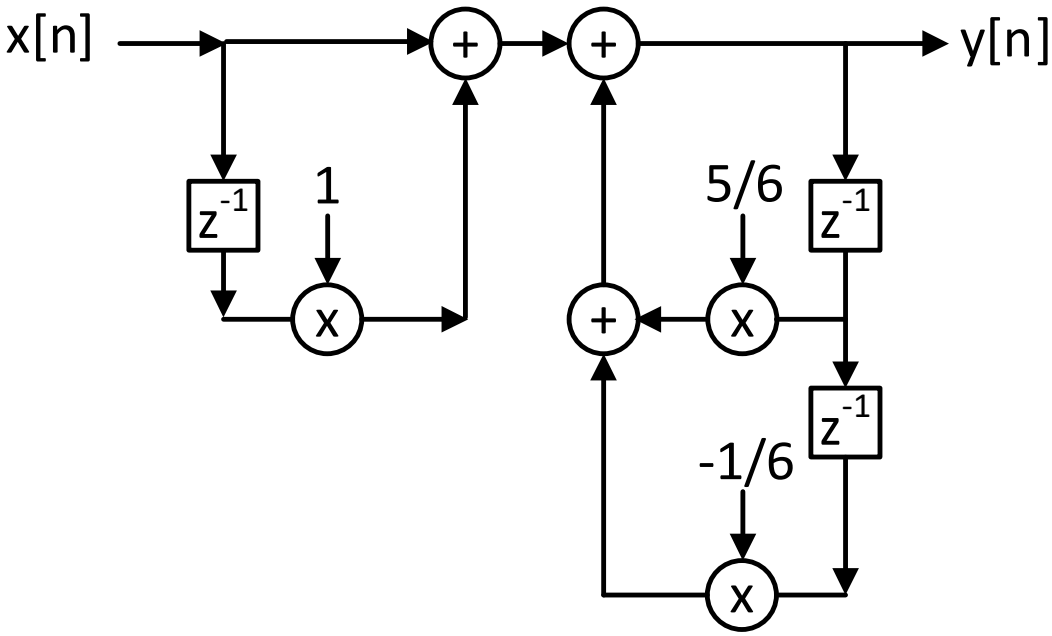

Cascade Form vs. Parallel Form vs. Direct Form

Example: A LTI system is described by the transfer function:

$$H(z) = \frac{1}{1 + \frac{1}{4}z^{-1} - \frac{1}{8}z^{-2}}$$

The difference equation is

$$y[n] + \frac{1}{4}y[n-1] - \frac{1}{8}y[n-2] = x[n]$$

Direct Form

Rearrange *H(z)*, we get

$$H(z) = \frac{1}{(1 + \frac{1}{2}z^{-1})(1 - \frac{1}{4}z^{-1})} = \left(\frac{1}{1 + \frac{1}{2}z^{-1}}\right)\left(\frac{1}{1 - \frac{1}{4}z^{-1}}\right)$$

Cascade Form

By performing a partial fraction expansion, we obtain

$$H(z) = \frac{\frac{2}{3}}{1 + \frac{1}{2}z^{-1}} + \frac{\frac{1}{3}}{1 - \frac{1}{4}z^{-1}}$$

Parallel Form

Cascade Form vs. Parallel Form vs. Direct Form

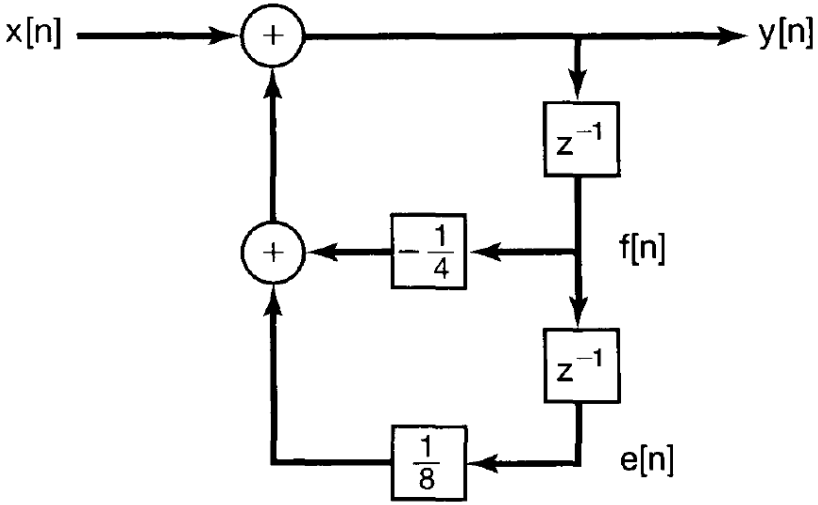

Direct Form

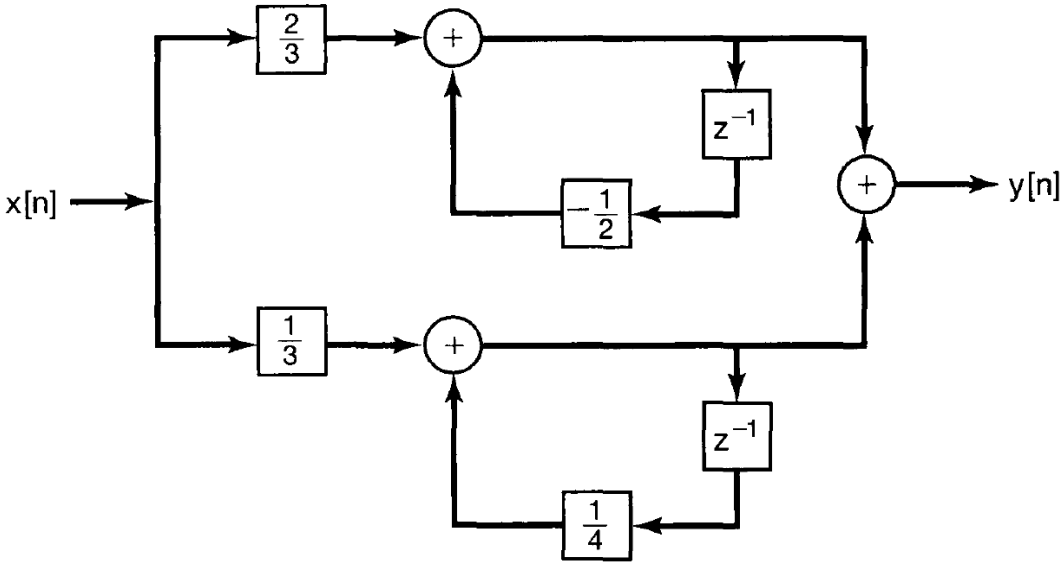

Parallel Form

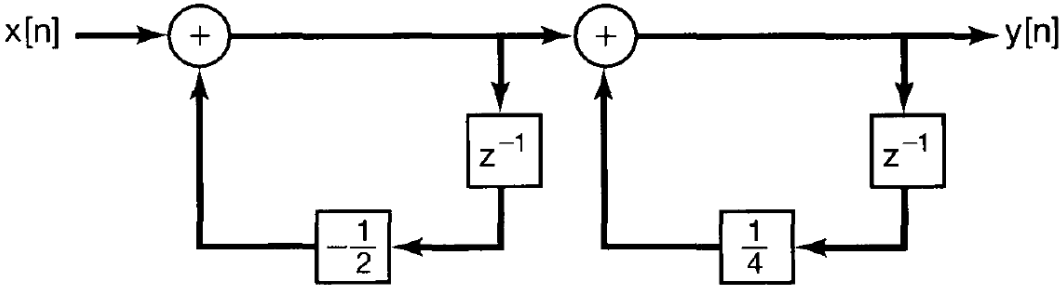

Cascade Form

Signals and Systems by Alan V. Oppenheim, 2nd edition, Prentice Hall 1997

Problem

Which of the following is NOT correct regarding different types of block diagram?

a) Cascade form block diagram has sub-systems in series.

b) Transposed direct form II block diagram can have less storage requirement.

c) Direct form I block diagram has an all-pole filter followed by an all-zero filter.

d) Direct form II block diagram has the feedback stage before the feed forward stage.

Implementation Considerations

- **A causal LTI system can be represented using many different block diagrams (e.g. how numerator and denominator factors are paired in a product form, how each factor is implemented, the order in which the factors are cascaded…).**

- **Each block diagram can be translated into a computer algorithm for implementation.**

- **In practice, the behaviors of different block diagram implementations are different. Need to examine**
  - Finite word length effect (quantization/roundoff errors…)
  - Overflow

https://ccrma.stanford.edu/~jos/fp/Four_Direct_Forms.html

Ira A. Fulton Schools of Engineering

Arizona State University