Name _____

ASU ID: _____

EEE 335 Spring 2025
Instructor: McDonald
April 21, 2025 R1

Please be sure to put your name on the exam. (above) Please use this template to write on and submit your final work. You may use the back of the exam sheets, just let me know you have continued the problem on the back by writing – SEE BACK.

EEE 335 Analog and Digital Circuits, Spring 2025

FINAL EXAM

Instructor
James McDonald

Exam is closed book. Three 8.5x11 double-sided sheet of formulas, hand-written, are allowed as well as a calculator. ***Show all your work on your submission.*** If you need more room use the back of the exam and write "see back" on the exam of that question. You must turn in your formula sheet with your test. You will need to show an ID that matches the name on your test when handing in your test to the TA or instructor.

100 Points Total

Problem #1 (15 points)

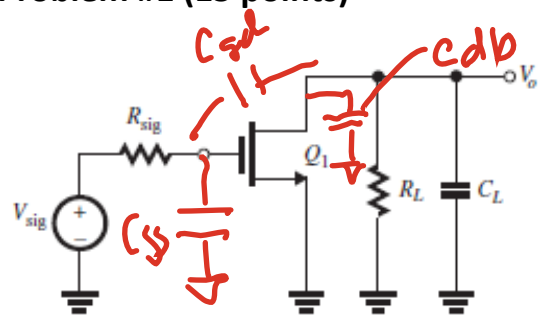

$C_L + C_{db} = 20fF$

$C_{gs} = 40fF$

$C_{gd} = 10fF$

Figure 1.0 (DC Bias not shown)

The MOSFET in the common-source amplifier in Fig. 1.0 , where the dc bias arrangement is not shown, is operating at *gm* =2mA/V and *ro* =20 kΩ and has *Rsig* =R_L =20 kΩ. The transistor capacitances are specified as *Cgs* = 40 fF and *Cgd* = *Cdb* = 10 fF. Also, there is an additional capacitance between the output node and ground, C_L = 10 fF.

Find the overall dc gain *Gv* ≡ *Vo/V*sig, the upper 3-dB frequency *fH*, and the gain–bandwidth product *ft*.

(Helpful Hint: To determine f_H, you may use the method of open-circuit time constants and recall that the resistance seen by *Cgd* is given by *Rgd* = *(*1 + *gmR'*$_L$*)Rsig* + *R'*$_L$, where *R'*$_L$= R_L // *ro*.)

$G_v = -g_m (R_L \| r_o) = -2\frac{mA}{V}(20k \| 20k) = \boxed{-20\frac{V}{V}}$

$\tau_1 = R_{sig} C_{gs} = (20k\Omega)(40fF) = \boxed{0.8ns}$

$R_{gd} = 1 + 2\frac{mA}{V}(20k \| 20k)20k + (20k \| 20k)$

$R_{gd} = (1 + 2\frac{mA}{V}(10k))20k + 10k = 430k$

$\tau_2 = (430k)(10fF) = \boxed{4.3ns}$

$\tau_3 = (10k)(20fF) = \boxed{0.2ns}$

$\tau_H = 4.3 + 0.8 + 0.2 = 5.3ns$

$\omega_H = \frac{1}{5.3ns} = 189\frac{rad}{s}$

$\boxed{f_H = 30MHz}$

$f_T = (20)(30MHz) = \boxed{600MHz}$

Problem #2 (18 points)

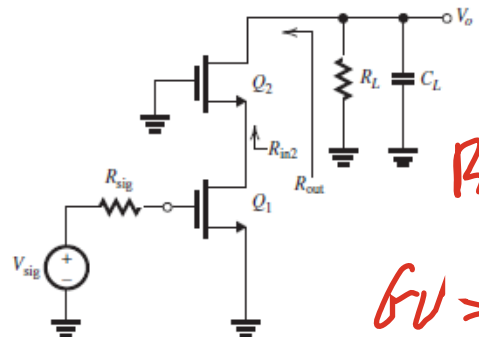

$G_v = -g_m R_O = -\frac{2mA}{V}(20k \| R_{out})$

$R_{out} = g_m r_o^2 = \frac{2mA}{V}(20k)^2 = 800k$

$G_v = -2mA(800k \| 20k) = -2mA(19.5k)$

$\boxed{G_v = -39\ V/V}$

Figure 2.0

To increase *ft of problem #1*, the common-source transistor *Q*1 is cascoded as shown in Fig. 2.0 where the dc bias arrangement is not shown. For the same values of *R*sig = R_L = 20 kΩ and C_L = *10fF* as in problem #1, assuming *Q*1 and *Q*2 are biased so that *gm*1 = *gm*2 =2mA/V and *ro*1 = *ro*2 = 20 kΩ, and for the capacitances of *Q*1 and *Q*2 to have the same values as specified in problem #1, *Cgs* = 40 fF and *Cgd* = *Cdb* = 10 fF, determine the following.

(a) [15 pts] Find *Gv*, and f_H for the cascode amplifier. *Find ft* for the cascode amplifier.

(Helpful Hint: Recall that *R*out ≈ *(gmro)ro* and $R_{in2} = 1/gm2 + R_L/g_{m2}r_{o2}$. In using the open-circuit time-constants method, adapt the formula given in problem #1 for *Rgd* to obtain *Rgd*1.)

$C_M = C_{gd}(1 - g_m(R_{in2} \| r_{o1}))$ (1k, 20k)

$= 10fF(1 + \frac{2mA}{V}(952\Omega))$

$C_M = 29fF$

$R_{in2} = \frac{1}{g_{m2}} + \frac{R_L}{g_{m2}r_{o2}}$

$= 1k\Omega$

$\tau_1 = (29fF + 40fF)(20k\Omega) = \boxed{1.38ns}$

$\tau_3 = (30fF)(20k \| g_m r_{o2})^2$

$\boxed{= 0.59ns}$

$\tau_2 = (40+10+10)fF \times (20k \| r_{in2}) = 60fF(952\Omega) = \boxed{0.057ns}$

(b) [3 pts] By what factor is *ft* increased?

$\tau_H = (1.38 + 0.59 + 0.057)ns = 2.02ns$

$f_H = \frac{1}{2.02ns(2\pi)} = 78.8\ MHz$

$f_T = (39)(78.8M) = 3.073GHz$

$\frac{f_{T\,CC}}{f_{T\,CS}} = \frac{3.073G}{600M} = \boxed{5.1}$

Problem #3 (15 points)

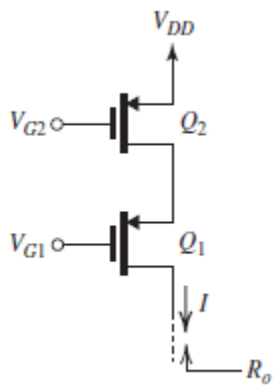

Figure 3.0

The cascode current source in Fig. 3.0 utilizes two identical PMOS transistors fabricated in a 0.18-µm CMOS process for which *VDD* = 1.8V, *Vtp* = −0.5V, V'_A = −6V/µm, and *µpCox* =100 µA/V^2.

Design the circuit to obtain *I* = 50 µA and *Ro* = 1 MΩ and to allow for the maximum possible voltage swing at the output terminal of the current source. Utilize $|V_{OV}|$ = 0.2V.

[6 pts] (a) Specify the required values of the dc bias voltages *VG*1and *VG*2.

$V_{G2} = +1.8 - (0.5 + 0.2) = \boxed{1.1V}$

$V_{G1} = 1.8 - \underset{|V_{OV}|}{0.2} - \underset{(V_T)\ |V_{OV}|}{(0.5 + 0.2)} = 1.6 - 0.7 = \boxed{0.9V}$

[3 pts] (b) What is the maximum allowable voltage at the output?

$V_{DD} - V_{OV} - V_{OV} = 1.8 - 0.2 - 0.2 = \boxed{1.4V}$

[6 pts] (c) Specify the values of *W/L and L* for *Q*1 and *Q*2 to meet the current and Ro requirements.

$g_m r_o^2 = 1M\Omega$

$I = \frac{1}{2} k_n' \left(\frac{W}{L}\right)(V_{OV})^2$

$g_m = \frac{2I_D}{V_{OV}} = \frac{2 \times 50\mu A}{0.2V} = 0.5\frac{mA}{V}$

$\frac{(50\mu A)(2)}{\left(100\frac{\mu A}{V^2}\right)(0.2V)^2} = \frac{W}{L}$

$r_o = \sqrt{\frac{1M}{0.5mA/V}} = 44.72k\Omega$

$\boxed{\frac{W}{L} = 25}$

$r_o = 44.72\,k\Omega = \frac{V_A' L}{I} = \frac{6(L)}{50\,\mu A} \Rightarrow \boxed{L = 0.372\,\mu m}$

Problem #4 (28 points)

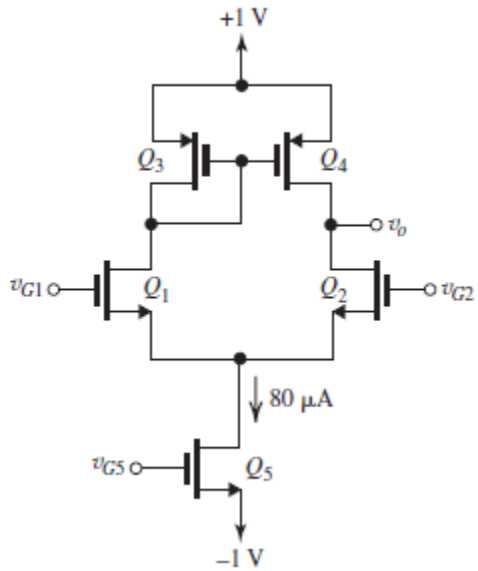

Figure 4.0

In the circuit of Fig. 4.0, all transistors are matched with $kn = kp = 2\text{mA/V}^2$, $|Vt| = 0.4\text{V}$, and $|V_A| = 10\text{V}$.

(a) [3 pts] If $v_{G1} = v_{G2} = 0\text{V}$, find the dc bias current in each of the four transistors *Q*1, *Q*2, *Q*3, and *Q*4, as well as the overdrive voltage $|VOV|$ for each. Ignore the Early effect.

$$I_{D1} = I_{D2} = \tfrac{1}{2} \times 80 = 40\ \mu\text{A}$$
$$I_{D3} = I_{D4} = 40\ \mu\text{A}$$
$$I_D = \tfrac{1}{2}k|V_{OV}|^2$$
$$0.040 = \tfrac{1}{2} \times 2 \times |V_{OV}|^2$$
$$|V_{OV}| = 0.2\ \text{V}$$

(b) [3 pts] find the dc voltage at the sources of Q1 and Q2, & the dc voltage at the gates of Q3 and Q4.

$$V_{S1,2} = V_{G1,2} - V_{GS1,2} = 0 - V_t - |V_{OV}| = -0.4 - 0.2 = -0.6$$

$$V_{G3,4} = +1 - V_{SG3,4} = 1 - |V_t| - |V_{OV}| = 1 - 0.4 - 0.2 = +0.4\ \text{V}$$

(c) [4 pts] Find *gm* of each of *Q*1 and *Q*2 and determine *ro* of each of *Q*2 and *Q*4.

$$g_{m1,2} = \frac{2I_{D1,2}}{V_{OV}} = \frac{2 \times 0.04}{0.2} = 0.4\ \text{mA/V}$$

$$r_{o2,4} = \frac{|V_A|}{I_{D2,4}} = \frac{10}{0.04} = 250\ \text{k}\Omega$$

(d) [3 pts] If $v_{G1} = +vid/2$ and $v_{G2} = -vid/2$, find the differential gain $Ad = vo/vid$.

$$A_d = \frac{v_o}{v_{id}}$$
$$= g_{m1,2}(r_{o2} \| r_{o4})$$
$$= 0.4(250 \| 250)$$
$$= 50 \text{ V/V}$$

(e) [10 pts] Find the output resistance *RSS* of the bias- current source *Q*5 and use it to determine the common mode gain *Acm* in the case $v_{G1} = v_{G2} = vicm$. Also, find the CMRR in dB.

$$R_{SS} = \frac{V_A}{I_{D5}}$$
$$= \frac{10}{0.08} = 125 \text{ k}\Omega$$
$$A_{cm} = -\frac{1}{2g_{m3}R_{SS}}$$

$$g_{m3} = g_{m1,2} = 0.4 \text{ mA/V}$$
$$A_{cm} = -\frac{1}{2 \times 0.4 \times 125} = -0.01 \text{ V/V}$$
$$\text{CMRR} = \frac{|A_d|}{|A_{cm}|}$$
$$= \frac{50}{0.01} = 5000$$

or 74 dB.

(f) [5 pts] If it is required to increase the CMRR by 6 dB, by what factor should the channel length of *Q*5 be changed?

[redacted] The CMRR can be increased by 6 dB, which is a factor-of-two reduction in $|A_{cm}|$ by increasing R_{SS} by a factor of two. This, in turn, can be achieved by increasing $|V_A|$ of Q_5 by a factor of two, which requires doubling the channel length L of Q_5.

$f_z = 2\omega_{p2} = \boxed{2.24 \text{ GHz}}$

(g) [BONUS +5 points] FInd the load pole, the mirror pole and the mirror zero with CLoad = 47fF on the output node and Cmirror = 57fF at the Q1 drain node.

$$\omega_{p1} = \frac{1}{R_o C_L} \qquad \omega_z = \frac{2g_{m3}}{C_m}$$

$$\omega_{p2} = \frac{g_{m3}}{C_m}$$

$f_{p1} = \frac{1}{2\pi(125k)(47fF)} = \boxed{27.1 \text{ MHz}}$

$f_{p2} = \frac{0.4mA/V}{2\pi 57fF} = \boxed{1.12 \text{ GHz}}$

Problems 5: True / False & Multiple Choice & Short Answer Section (24 points total)

True or False – Circuit the correct answer (2pts each)

1. In differential amplifier the CMRR is desired to be high. **True** **False**

2. A cascode amplifier will have high gain as long as R_L is low. **True** **False**

3. A common gate amplifier makes a good current buffer. **True** **False**

4. The Miller Effect causes Cgd to be reduced when reflected to the input side of a common source amplifier. **True** **False**

5. The common mode gain of a differential amp increases with an ideal current source. **True** **False**

6. The input resistance (Rin) of a common source amplifier is less than the Rin of a common gate amplifier. **True** **False**

7. In analog amplifiers, MOSFETs should be operated in saturation. **True** **False**

Multiple Choice – Circle the correct answer (As listed pts)

1. [2 pts] How many poles and zeros does a current mirror loaded differential amplifier have?
   a. 2 poles, 2 zeros
   b. 1 pole, 1 zero
   c. 2 poles, 1 zero
   d. 2 poles, no zeros
   e. None of the above

2. [3 pts] If Rsig is very small (insignificant), the 3dB pole of a Common Source (CS) amplifier is created from **(Circle all that apply)**
   a. Cgd reflect to the input
   b. Rsig
   c. Cgd reflected to the output
   d. C_L on the output
   e. Rout
   f. Cgd reflected to the output

3. [2 pts] Unlike the other amplifiers we studied in class, the common drain (source follower) can have what type of poles?

complex poles

4. [3 pts] Name 3 methods we learned in class for estimating the f_H (3dB bandwidth) of the common source amplifier?

SQ ROOT METHOD, OCTC
Miller theorem,

BONUS Opportunity (5 points = 5%)

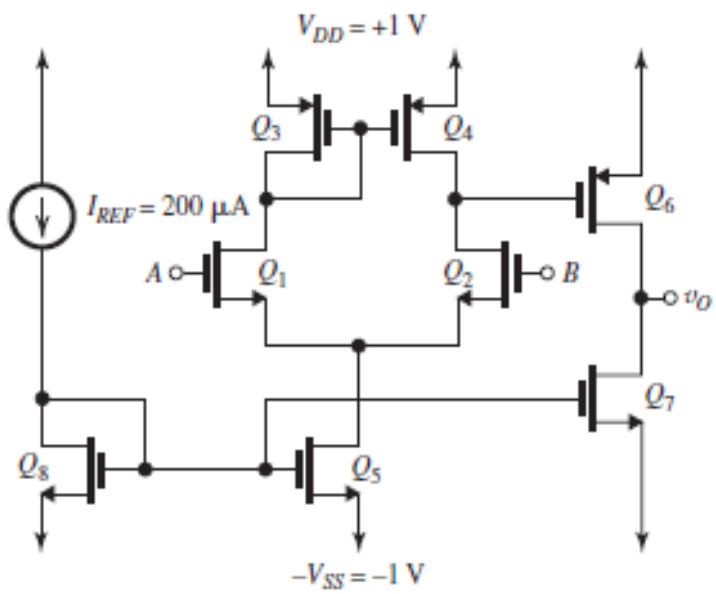

a) Calculate the mid-band differential gain (differential inputs to single-ended output Vo/Vid) of this 2-stage amplifier. .(This is a common amplifier in integrated circuit design.) Assume the following information.

All transistors are matched. Inputs $v_A = vid/2$ and $v_B = -vid/2$.
Early voltage is $|V_A| = 5$V, $V_{OV} = 0.2$V, $k'n = 4k'p = 400$ μA/V^2, and $Vtn = -Vtp = |0.4|$V.

$$g_m = \frac{2I_{D1}}{V_{OV}} = \frac{2 \times 0.1mA}{0.2V} = 1mA/V$$

DIFF AMP

$$r_{O2} = r_{O4} = \frac{V_A}{I_{D2}} = \frac{5}{0.1mA} = 50k\Omega$$

$$R_{out} = r_{O2} // r_{O4} = 25k\Omega$$

$$A_d = (25k\Omega)\left(\frac{1mA}{V}\right) = 25 V/V$$

C.S. Amp

$$g_{m6} = \frac{2I_{D6}}{|V_{OV}|} = \frac{2 \times 0.2\mu A}{0.2} = 2\frac{\mu A}{V}$$

$$r_{o6} = r_{o7} = \frac{|V_A|}{I_{D6}} = \frac{5}{0.2mA} = 25k\Omega$$

$$A_{CS} = g_{m6} R_{out} = \frac{2\mu A}{V}(25k\Omega \| 25k) = 25\frac{V}{V}$$

Total Gain

$$A_T = \frac{V_o}{V_{id}} = \left(\frac{25V}{V}\right)\left(\frac{25V}{V}\right) = \boxed{625 \frac{V}{V}}$$