Name _____

ASU ID: _____

EEE 335 Spring 2025
Instructor: McDonald
May 6, 2025, R2

Please be sure to put your name on the exam. (above) Please use this template to write on and submit your final work. You may use the back of the exam sheets, just let me know you have continued the problem on the back by writing – SEE BACK.

EEE 335 Analog and Digital Circuits, Spring 2025

FINAL EXAM

Instructor
James McDonald

Exam is closed book. Three 8.5x11 double-sided sheet of formulas, hand-written, are allowed as well as a calculator. ***Show all your work on your submission.*** If you need more room use the back of the exam and write "see back" on the exam of that question. You must turn in your formula sheet with your test. You will need to show an ID that matches the name on your test when handing in your test to the TA or instructor.

100 Points Total

(There are **110 points available** with the two 5-point bonus questions.)

Problem #1 (15 points)

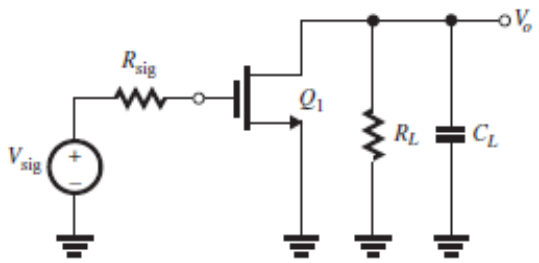

Figure 1.0 (DC Bias not shown)

The MOSFET in the common-source amplifier in Fig. 1.0, where the dc bias arrangement is not shown, is operating at *gm* =2mA/V and *ro* =20 k*Ω* and has *R*sig =R_L =20 k*Ω*. The transistor capacitances are specified as *Cgs* = 40 fF and *Cgd* = *Cdb* = 10 fF. Also, there is an additional capacitance between the output node and ground, C_L = 10 fF.

Find the overall (a) dc gain ***Gv*** ≡ *Vo/V*sig, (b) the upper 3-dB frequency $\boldsymbol{f_H}$**,** and (c) the gain–bandwidth product ***ft*.**

(Helpful Hint: To determine f_H, you may use the method of OCTC and recall that the resistance seen by *Cgd* is given by *Rgd* = *(*1 + *gm*R'_L*)R*sig + R'_L, where R'_L= R_L // *ro*.)

Problem #2 (18 points)

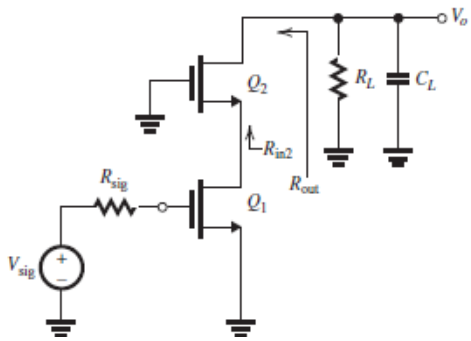

Figure 2.0

To increase *ft of problem #1*, the common-source transistor *Q*1 is cascoded as shown in Fig. 2.0 where the dc bias arrangement is not shown. For the same values of *R*sig = R_L = 20 k*Ω* and C_L = *10fF* as in problem #1, assuming *Q*1 and *Q*2 are biased so that *gm*1 = *gm*2 =2mA/V and *ro*1 = *ro*2 = 20 k*Ω*, and for the capacitances of *Q*1 and *Q*2 to have the same values as specified in problem #1, *Cgs* = 40 fF and *Cgd* = *Cdb* = 10 fF, determine the following.

(a) [15 pts] Find *Gv*, and f_H for the cascode amplifier. *Find ft* for the cascode amplifier.

(Helpful Hints: Recall that *R*out ≈ *(gmro)ro* and $R_{in2} = 1/gm2 + R_L/g_{m2}r_{o2}$.
Don't forget C_{db} capacitances where necessary. Helps to draw the caps in the diagram.)

(b) [3 pts] By what factor is *ft* increased over the Common Source amplifier?

Problem #3 (15 points)

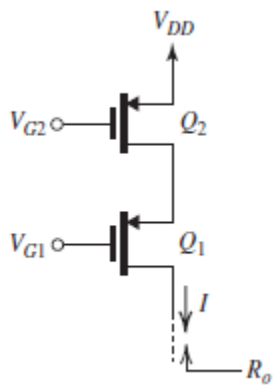

Figure 3.0

The cascode current source in Fig. 3.0 utilizes two identical PMOS transistors fabricated in a 0.18-µm CMOS process for which *VDD* = 1.8V, *Vtp* = −0.5V, V'_A = −6V/µm, and *µpCox* =100 µA/V^2.

Design the circuit to obtain *I* = 50 µA and *Ro* = 1 MΩ and to allow for the maximum possible voltage swing at the output terminal of the current source. **Utilize $|V_{OV}|$ = 0.2V.**

[6 pts] (a) Specify the required values of the dc bias voltages *VG*1and *VG*2.

[3 pts] (b) What is the maximum allowable voltage at the output?

[6 pts] (c) Specify the values of (*W/L) and L* for *Q*1 and *Q*2 to meet the current and Ro requirements. (For (***W/L) calculation*** *you do NOT need to consider channel length modulation.)*

Problem #4 (28 points)

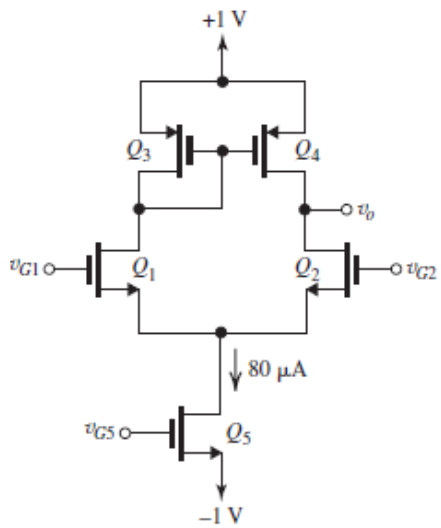

Figure 4.0

In the circuit of Fig. 4.0, all transistors are matched with $kn = kp = 2\text{mA/V}^2$, $|Vt| = 0.4\text{V}$, and $|V_A| = 10\text{V}$.

(a) [3 pts] If $v_{G1} = v_{G2} = 0\text{V}$, find the **dc bias current** in each of the four transistors *Q*1, *Q*2, *Q*3, and *Q*4, as well as the **overdrive voltage |*VOV*|** for each. Ignore the Early effect.

(b) [3 pts] Find the **dc voltage at the sources of *Q*1 and *Q*2**, as well as the **dc voltage at the gates of *Q*3 and *Q*4.**

(c) [4 pts] Find *gm* of each of *Q*1 and *Q*2 and determine *ro* of each of *Q*2 and *Q*4.

(d) [3 pts] If $v_{G1} = +vid/2$ and $v_{G2} = -vid/2$, find the differential gain $Ad = vo/vid$.

(e) [10 pts] Find the **output resistance *RSS*** of the bias- current source *Q*5 and use it to determine the **common mode gain *Acm*** in the case $v_{G1} = v_{G2} = vicm$. Also, **find the CMRR in dB**.

(f) [5 pts] If it is required to increase the CMRR by 6 dB, by what factor should the channel length of *Q*5 be changed?

(g) **[BONUS +5 points]** Find the load pole, the mirror pole and the mirror zero with C_{Load} = 47fF on the output node and C_{mirror} = 57fF at the Q1 drain node.

Problems 5: True / False & Multiple Choice & Short Answer Section (24 points total)

True or False – Circuit the correct answer (2pts each)

1. In differential amplifier the CMRR is desired to be high. **True** **False**

2. A cascode amplifier will have high gain as long as R_L is low. **True** **False**

3. A common gate amplifier makes a good current buffer. **True** **False**

4. The Miller Effect causes Cgd to be reduced when reflected to the input side of a common source amplifier. **True** **False**

5. The common mode gain of a differential amp increases with an ideal current source. **True** **False**

6. The input resistance (Rin) of a common source amplifier is less than the Rin of a common gate amplifier. **True** **False**

7. In analog amplifiers, MOSFETs should be operated in saturation. **True** **False**

Multiple Choice – Circle the correct answer (As listed pts)

1. [2 pts] How many poles and zeros does a current mirror loaded differential amplifier have?
   a. 2 poles, 2 zeros
   b. 1 pole, 1 zero
   c. 2 poles, 1 zero
   d. 2 poles, no zeros
   e. None of the above

2. [3 pts] If Rsig is very small (insignificant), the 3dB pole of a Common Source (CS) amplifier is created from **(Circle all that apply)**
   a. Cgd reflect to the input
   b. Rsig
   c. Cgd reflected to the output
   d. C_L on the output
   e. Rout

3. [2 pts] Unlike the other amplifiers we studied in class, the common drain (source follower) can have what type of poles?

4. [3 pts] Name 3 methods we learned in class for estimating the f_H (3dB bandwidth) of the common source amplifier?

<u>BONUS Opportunity (5 points = 5%)</u>

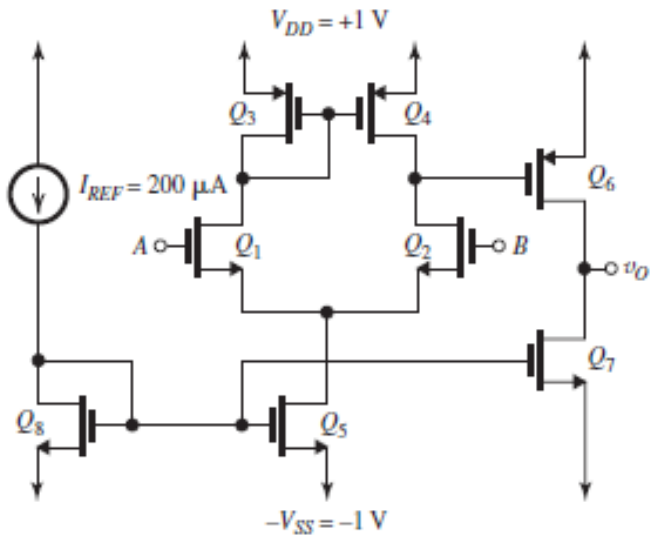

a) Calculate the **mid-band differential gain** (differential inputs to single-ended output Vo/Vid) of this 2-stage amplifier. .(This is a common amplifier in integrated circuit design.) Assume the following information.

All transistors are matched. Inputs $v_A = vid/2$ and $v_B = -vid/2$.
Early voltage is $|V_A| = 5$V, $V_{OV} = 0.2$V, $k'n = 4k'p = 400$ μA/V^2, and $Vtn = -Vtp = |0.4|$V.