FRDM-KL03Z and Microphone

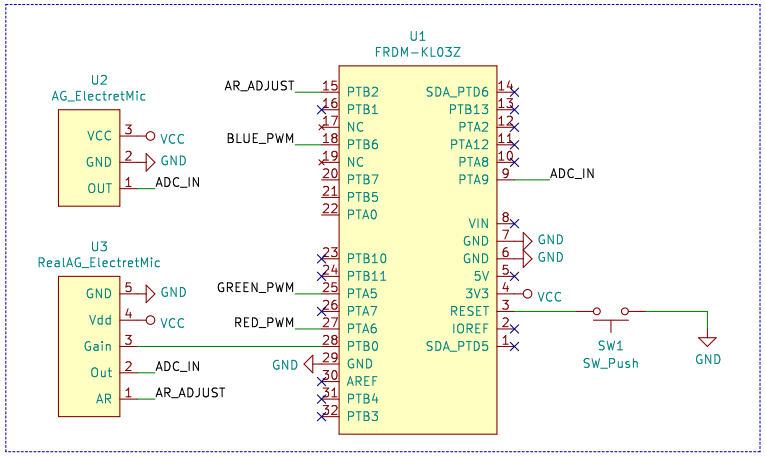

12V power supply

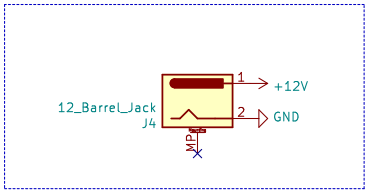

Output stage

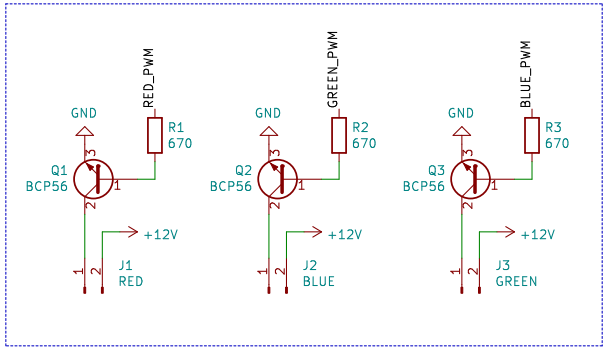

Sheet: /
File: soundBoard.sch

Title:

Size: User	Date:	Rev:
KiCad E.D.A. eeschema (5.1.5)-3		Id: 1/1