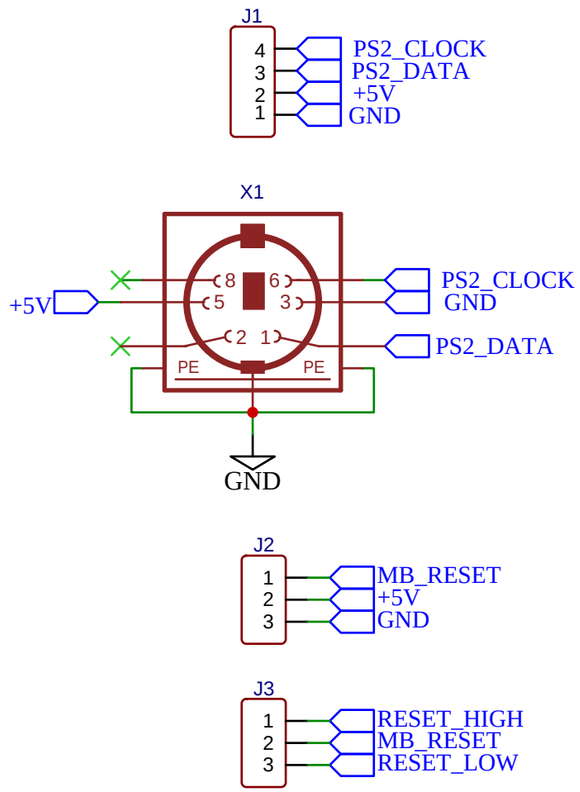

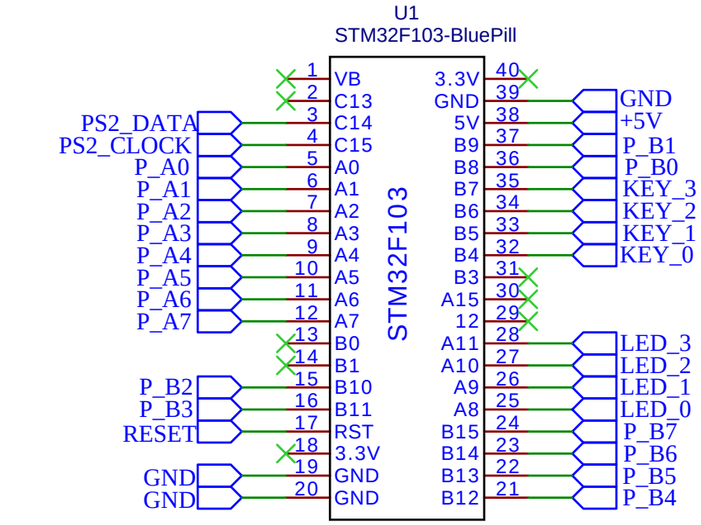

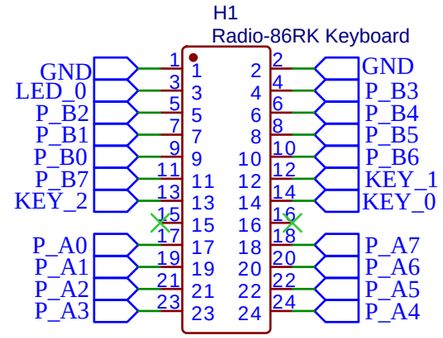

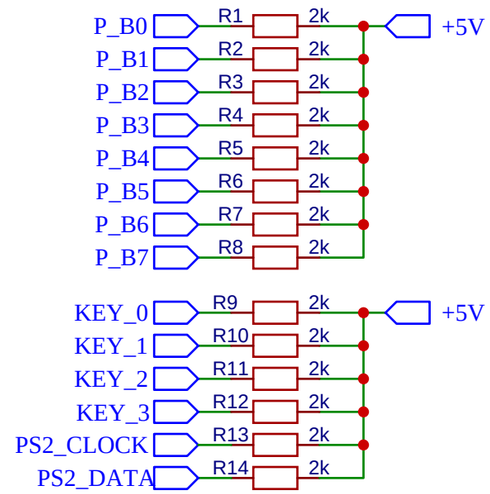

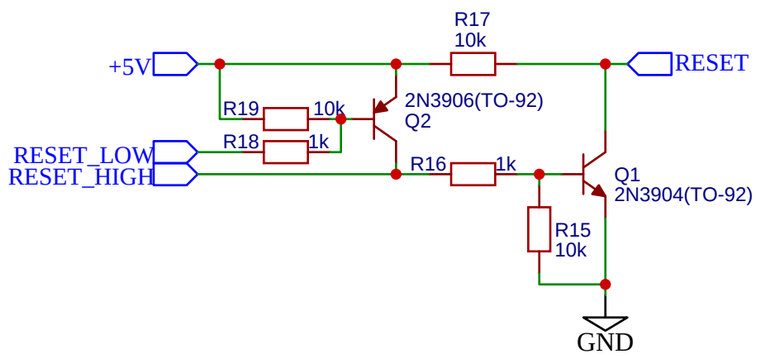

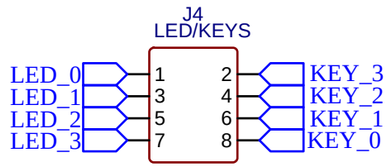

TITLE: Radio-86RK PS/2 Keyboard (STM32 BluePill)		REV: 1.1
EasyEDA	Company: Valeriy Grazhdankin	Sheet: 1/1
	Date: 2022-07-27 Drawn By: leaderit	