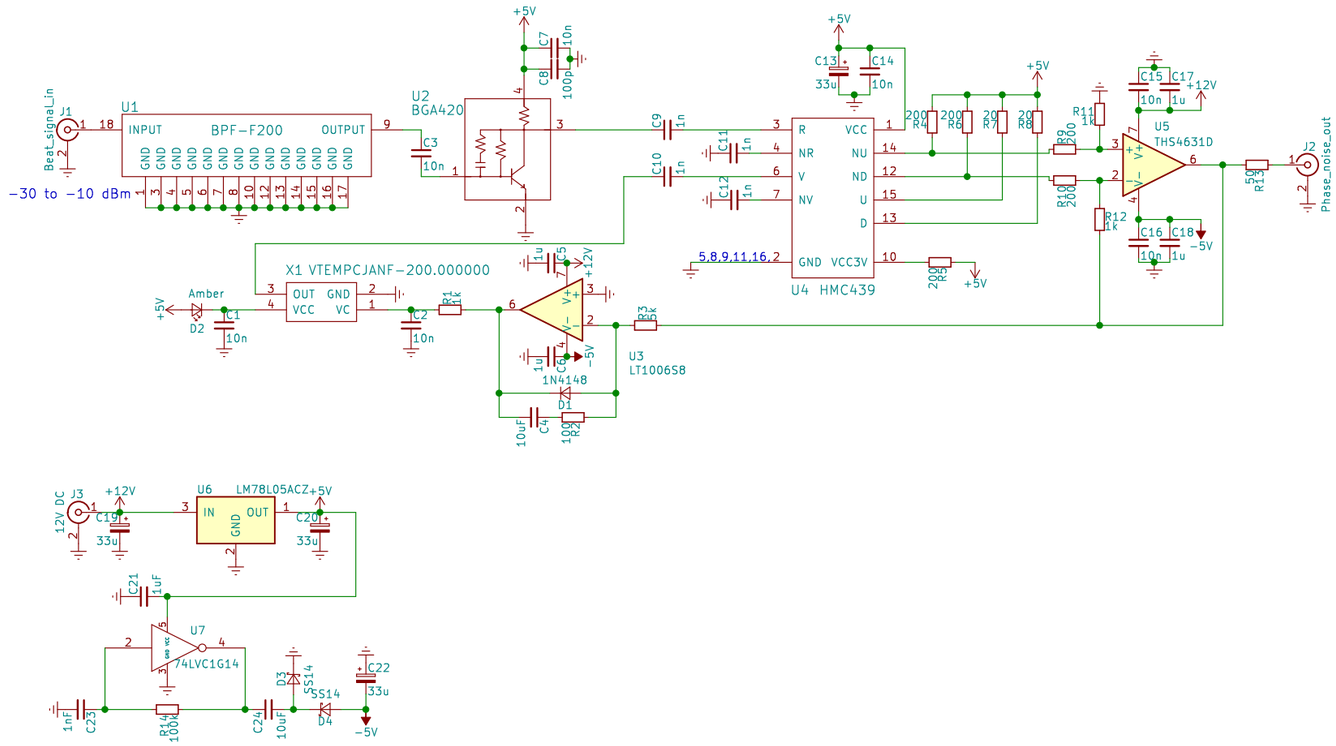
Beat_signal_in
J1
U1
INPUT
BPF-F200
OUTPUT
GND
-30 to -10 dBm
C3
10n
U2
BGA420
+5V
C7
10n
C8
100p
C9
1n
C10
1n
C11
1n
C12
1n
C13
33u
C14
10n
R
NR
V
NV
VCC
NU
ND
U
D
GND VCC3V
5,8,9,11,16,2
U4 HMC439
R4
200
R5
200
R6
200
R7
200
R8
200
R9
200
R10
200
R11
1k
R12
1k
R13
50
C15
10n
C17
1u
+12V
U5
THS4631D
C16
10n
C18
1u
-5V
J2
Phase_noise_out
X1 VTEMPCJANF-200.000000
OUT
GND
VCC
VC
Amber
D2
C1
10n
C2
10n
R1
1k
R3
8k
U3
LT1006S8
C5
1u
C6
1u
1N4148
D1
C4
10uF
R2
100
R29
200
J3
12V DC
C19
33u
U6
LM78L05ACZ
IN
OUT
GND
C20
33u
C21
1uF
U7
74LVC1G14
C23
1nF
R14
100k
C24
10uF
D3
SS14
D4
SS14
C22
33u