ITEM NO.	PART NUMBER	PartNo	Material	Revision	SW-Configuration Name(Configuration Name)	QTY.
1	Upper Clevis	RBROLL-011	CRS.120	03/04/2025	Default	1

NOTE: No sourface finish or paint required.

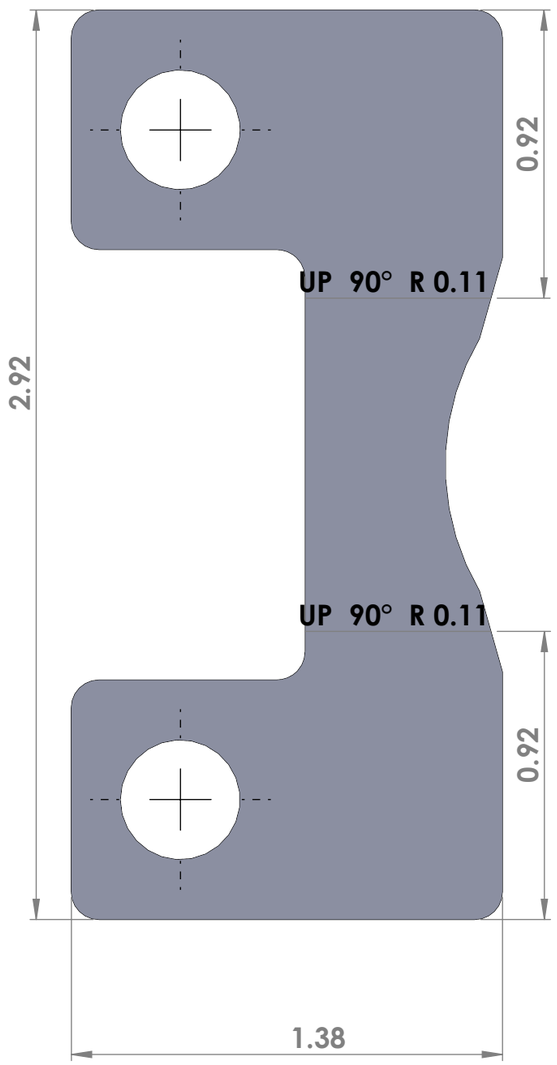

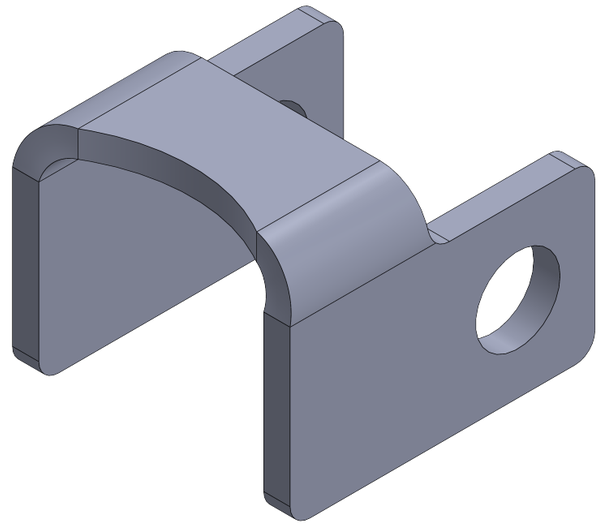

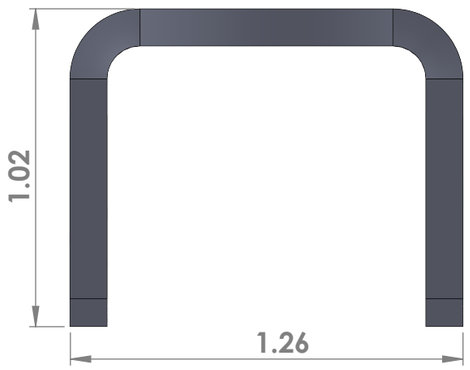

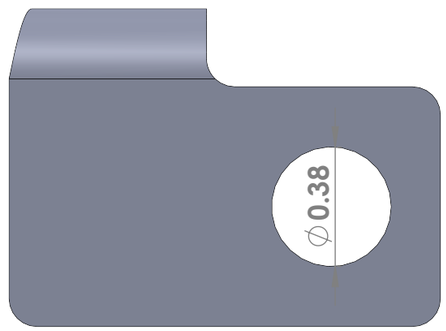

UNLESS OTHERWISE SPECIFIED: DIMENSIONS ARE IN MILLIMETERS SURFACE FINISH: TOLERANCES: LINEAR: ANGULAR:	FINISH:		DEBURR AND BREAK SHARP EDGES	DO NOT SCALE DRAWING	REVISION	
	NAME	SIGNATURE	DATE	TITLE:		
DRAWN						
CHK'D						
APPV'D						
MFG						
Q.A			MATERIAL: CRS.120	DWG NO. Upper Clevis		A3
			WEIGHT:	SCALE:2:1	SHEET 1 OF 1	

SOLIDWORKS Educational Product. For Instructional Use Only.