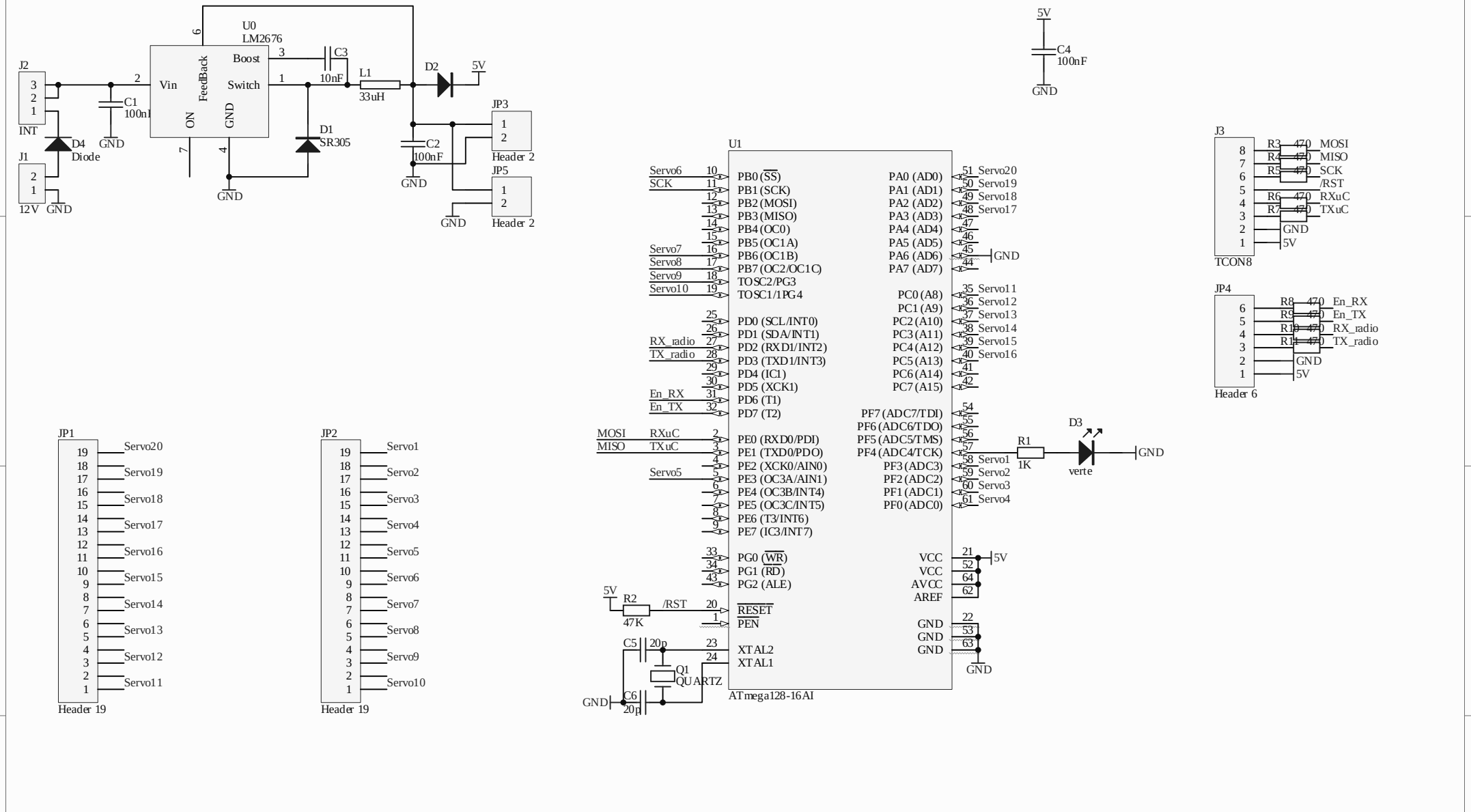
U0
LM2676
Vin
FeedBack
Boost
Switch
ON
GND
C1
100nF
C3
10nF
L1
33uH
D2
5V
D1
SR305
C2
100nF
J2
INT
D4
Diode
J1
12V
GND
JP3
Header 2
JP5
Header 2
C4
100nF
U1
ATmega128-16AI
PB0 (SS)
PB1 (SCK)
PB2 (MOSI)
PB3 (MISO)
PB4 (OC0)
PB5 (OC1A)
PB6 (OC1B)
PB7 (OC2/OC1C)
TOSC2/PG3
TOSC1/1PG4
PD0 (SCL/INT0)
PD1 (SDA/INT1)
PD2 (RXD1/INT2)
PD3 (TXD1/INT3)
PD4 (IC1)
PD5 (XCK1)
PD6 (T1)
PD7 (T2)
PE0 (RXD0/PDI)
PE1 (TXD0/PDO)
PE2 (XCK0/AIN0)
PE3 (OC3A/AIN1)
PE4 (OC3B/INT4)
PE5 (OC3C/INT5)
PE6 (T3/INT6)
PE7 (IC3/INT7)
PG0 (WR)
PG1 (RD)
PG2 (ALE)
RESET
PEN
XTAL2
XTAL1
PA0 (AD0)
PA1 (AD1)
PA2 (AD2)
PA3 (AD3)
PA4 (AD4)
PA5 (AD5)
PA6 (AD6)
PA7 (AD7)
PC0 (A8)
PC1 (A9)
PC2 (A10)
PC3 (A11)
PC4 (A12)
PC5 (A13)
PC6 (A14)
PC7 (A15)
PF7 (ADC7/TDI)
PF6 (ADC6/TDO)
PF5 (ADC5/TMS)
PF4 (ADC4/TCK)
PF3 (ADC3)
PF2 (ADC2)
PF1 (ADC1)
PF0 (ADC0)
VCC
AVCC
AREF
GND
Servo6
SCK
Servo7
Servo8
Servo9
Servo10
RX_radio
TX_radio
En_RX
En_TX
MOSI
MISO
RXuC
TXuC
Servo5
Servo20
Servo19
Servo18
Servo17
Servo11
Servo12
Servo13
Servo14
Servo15
Servo16
Servo1
Servo2
Servo3
Servo4
R1
1K
D3
verte
R2
47K
/RST
C5
20p
C6
20p
Q1
QUARTZ
J3
TCON8
MOSI
MISO
SCK
/RST
RXuC
TXuC
JP4
Header 6
En_RX
En_TX
RX_radio
TX_radio
JP1
Header 19
JP2
Header 19
Title
Robot Humanoide
Size
A4
Number
Revision
Date: 21/03/2007
Sheet of
File: D:\ELECTRONIQUE\..\ATmega128.SCHDOC
Drawn By: