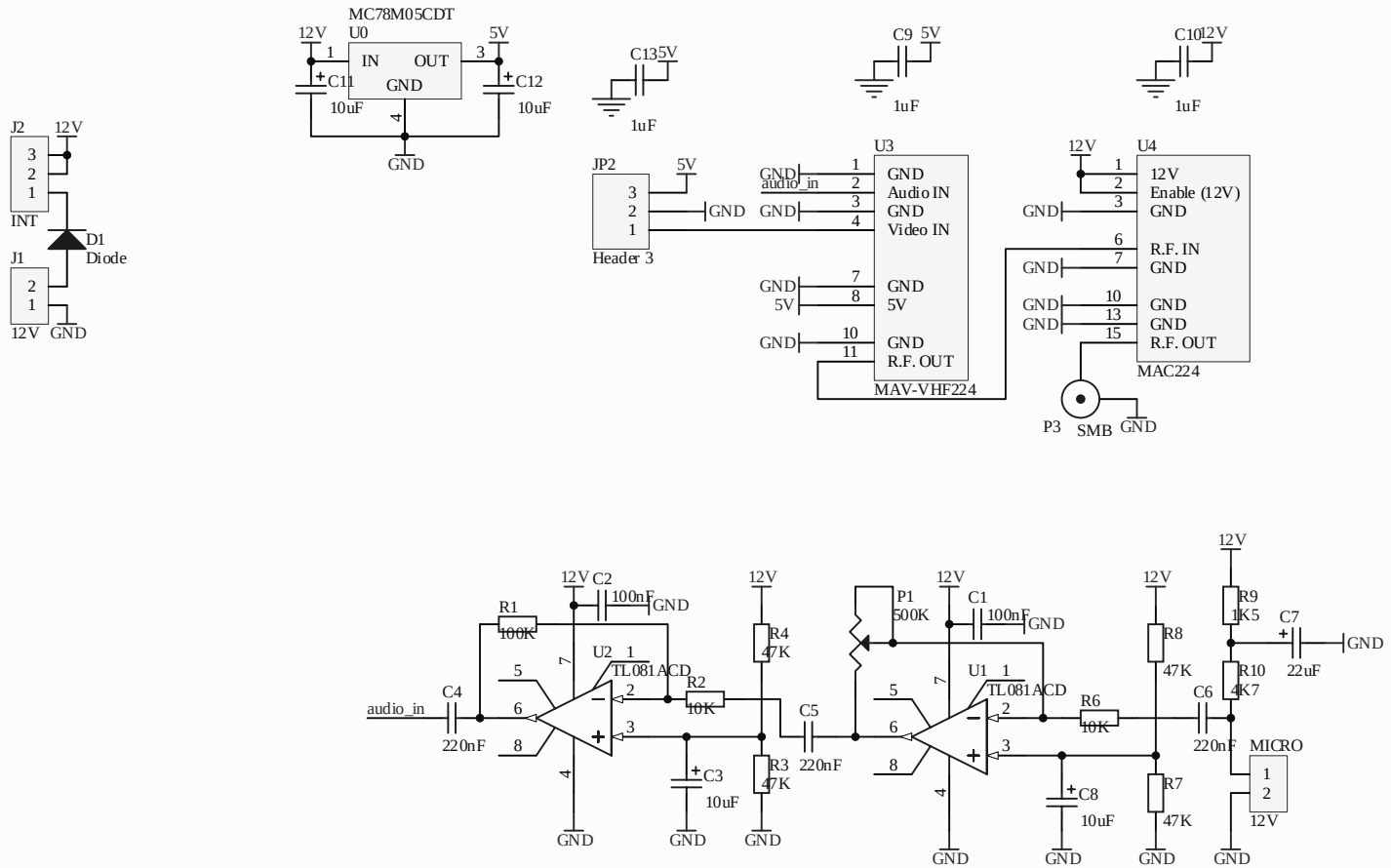

Title		
Size A4	Number Emetteur Audio-Video Radio	Revision
Date: 06/03/2007	Sheet of	
File: D:\Electronique\10_Video\Video.SCHDOC	Drawn By:	