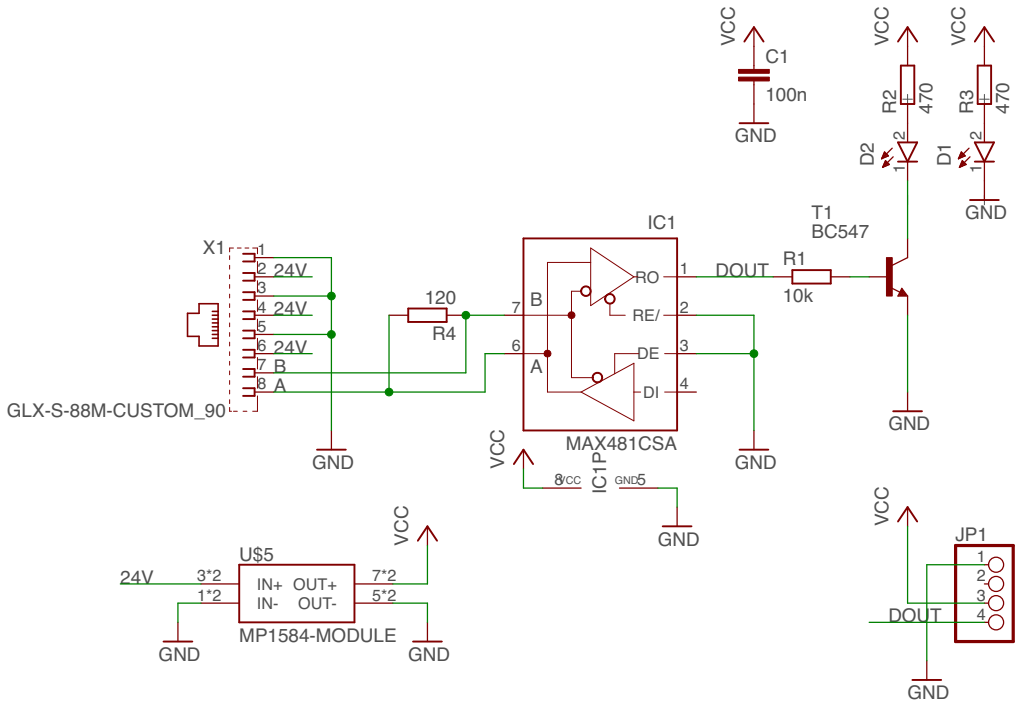

ledctrl_driver

01.04.17 08:41

Sheet: 1/1