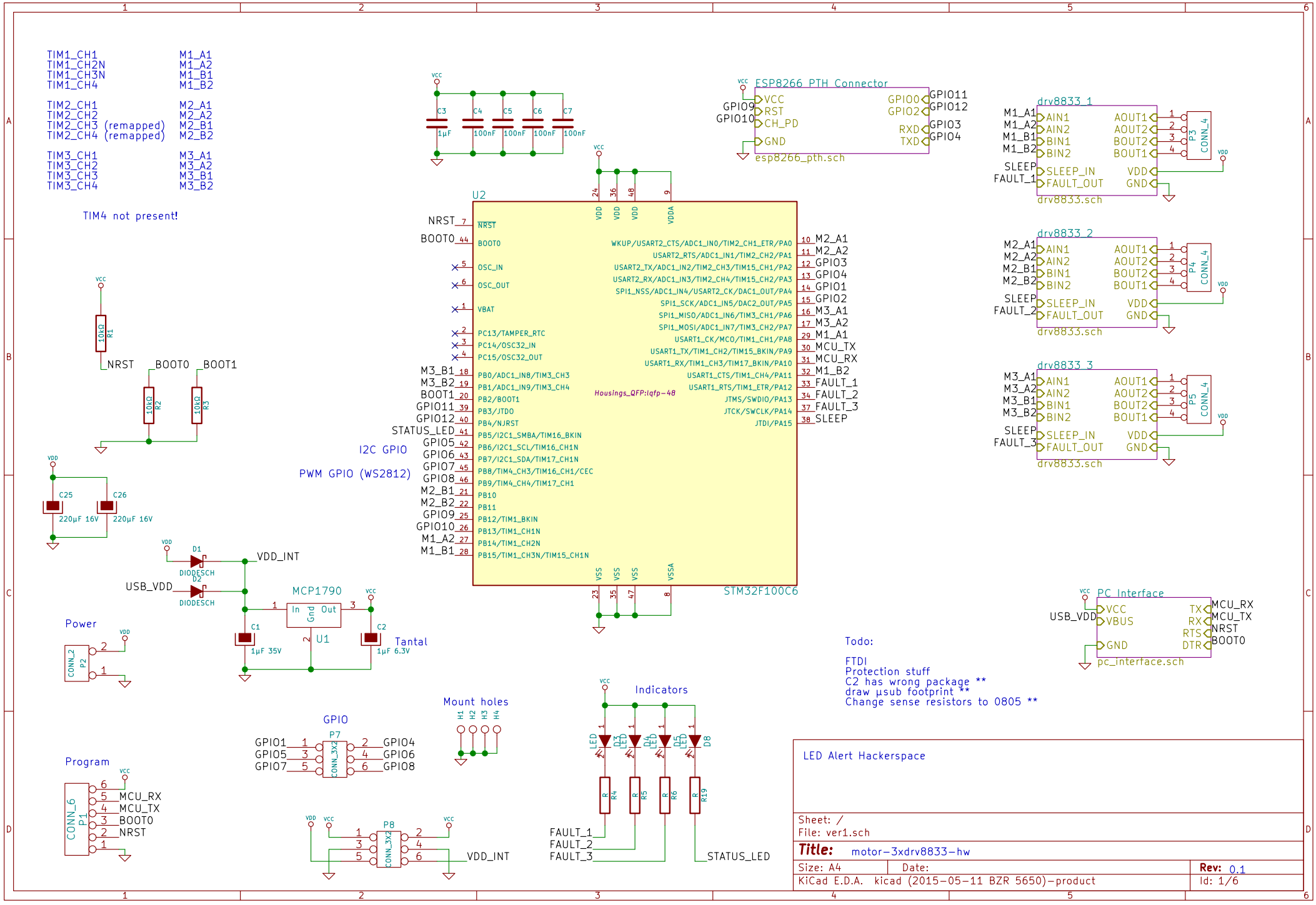
TIM1_CH1 M1_A1
TIM1_CH2N M1_A2
TIM1_CH3N M1_B1
TIM1_CH4 M1_B2
TIM2_CH1 M2_A1
TIM2_CH2 M2_A2
TIM2_CH3 (remapped) M2_B1
TIM2_CH4 (remapped) M2_B2
TIM3_CH1 M3_A1
TIM3_CH2 M3_A2
TIM3_CH3 M3_B1
TIM3_CH4 M3_B2
TIM4 not present!
C3 1µF
C4 100nF
C5 100nF
C6 100nF
C7 100nF
ESP8266 PTH Connector
VCC
GPIO9
GPIO10
RST
CH_PD
GND
GPIO0
GPIO2
RXD
TXD
GPIO11
GPIO12
GPIO3
GPIO4
esp8266_pth.sch
drv8833_1
M1_A1
M1_A2
M1_B1
M1_B2
SLEEP
FAULT_1
AIN1
AIN2
BIN1
BIN2
SLEEP_IN
FAULT_OUT
AOUT1
AOUT2
BOUT2
BOUT1
VDD
GND
P3
CONN_4
drv8833.sch
drv8833_2
M2_A1
M2_A2
M2_B1
M2_B2
SLEEP
FAULT_2
P4
drv8833_3
M3_A1
M3_A2
M3_B1
M3_B2
SLEEP
FAULT_3
P5
U2
NRST
BOOT0
OSC_IN
OSC_OUT
VBAT
PC13/TAMPER_RTC
PC14/OSC32_IN
PC15/OSC32_OUT
PB0/ADC1_IN8/TIM3_CH3
PB1/ADC1_IN9/TIM3_CH4
PB2/BOOT1
PB3/JTDO
PB4/NJRST
PB5/I2C1_SMBA/TIM16_BKIN
PB6/I2C1_SCL/TIM16_CH1N
PB7/I2C1_SDA/TIM17_CH1N
PB8/TIM4_CH3/TIM16_CH1/CEC
PB9/TIM4_CH4/TIM17_CH1
PB10
PB11
PB12/TIM1_BKIN
PB13/TIM1_CH1N
PB14/TIM1_CH2N
PB15/TIM1_CH3N/TIM15_CH1N
WKUP/USART2_CTS/ADC1_IN0/TIM2_CH1_ETR/PA0
USART2_RTS/ADC1_IN1/TIM2_CH2/PA1
USART2_TX/ADC1_IN2/TIM2_CH3/TIM15_CH1/PA2
USART2_RX/ADC1_IN3/TIM2_CH4/TIM15_CH2/PA3
SPI1_NSS/ADC1_IN4/USART2_CK/DAC1_OUT/PA4
SPI1_SCK/ADC1_IN5/DAC2_OUT/PA5
SPI1_MISO/ADC1_IN6/TIM3_CH1/PA6
SPI1_MOSI/ADC1_IN7/TIM3_CH2/PA7
USART1_CK/MCO/TIM1_CH1/PA8
USART1_TX/TIM1_CH2/TIM15_BKIN/PA9
USART1_RX/TIM1_CH3/TIM17_BKIN/PA10
USART1_CTS/TIM1_CH4/PA11
USART1_RTS/TIM1_ETR/PA12
JTMS/SWDIO/PA13
JTCK/SWCLK/PA14
JTDI/PA15
Housings_QFP:lqfp-48
STM32F100C6
M2_A1
M2_A2
GPIO3
GPIO4
GPIO1
GPIO2
M3_A1
M3_A2
M1_A1
MCU_TX
MCU_RX
M1_B2
FAULT_1
FAULT_2
FAULT_3
SLEEP
M3_B1
M3_B2
BOOT1
GPIO11
GPIO12
STATUS_LED
GPIO5
GPIO6
GPIO7
GPIO8
M2_B1
M2_B2
GPIO9
GPIO10
M1_A2
M1_B1
I2C GPIO
PWM GPIO (WS2812)
R1 10kΩ
R2 10kΩ
R3 10kΩ
C25 220µF 16V
C26 220µF 16V
D1 DIODESCH
D2 DIODESCH
USB_VDD
VDD_INT
MCP1790
In
Gnd
Out
U1
C1 1µF 35V
C2 1µF 6.3V
Tantal
Power
CONN_2
P2
Todo:
FTDI
Protection stuff
C2 has wrong package **
draw µsub footprint **
Change sense resistors to 0805 **
PC_Interface
VCC
USB_VDD
VBUS
GND
TX
RX
RTS
DTR
MCU_RX
MCU_TX
NRST
BOOT0
pc_interface.sch
Mount holes
H1
H2
H3
H4
GPIO
P7
CONN_3X2
GPIO1
GPIO5
GPIO7
GPIO4
GPIO6
GPIO8
Indicators
LED
D3
D4
D5
D8
R4
R5
R6
R19
FAULT_1
FAULT_2
FAULT_3
STATUS_LED
Program
CONN_6
P1
MCU_RX
MCU_TX
BOOT0
NRST
P8
VDD_INT
LED Alert Hackerspace
Sheet: /
File: ver1.sch
Title: motor-3xdrv8833-hw
Size: A4
Date:
Rev: 0.1
KiCad E.D.A. kicad (2015-05-11 BZR 5650)-product
Id: 1/6

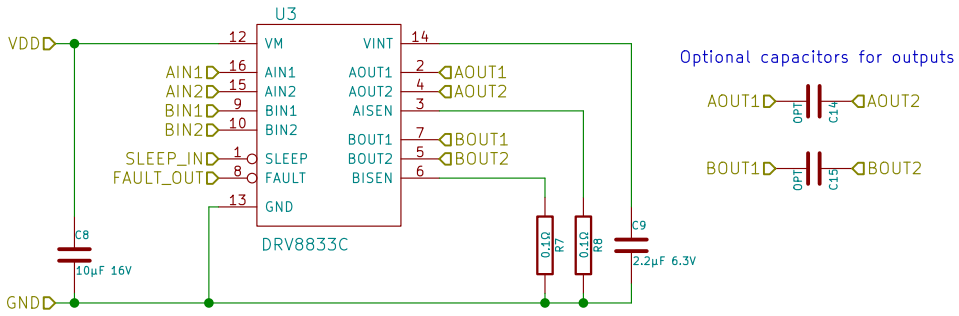

Sheet: /drv8833_1/
File: drv8833.sch

Title:

Size: A4	Date:	Rev:
KiCad E.D.A. kicad (2015-05-11 BZR 5650)-product		Id: 2/6

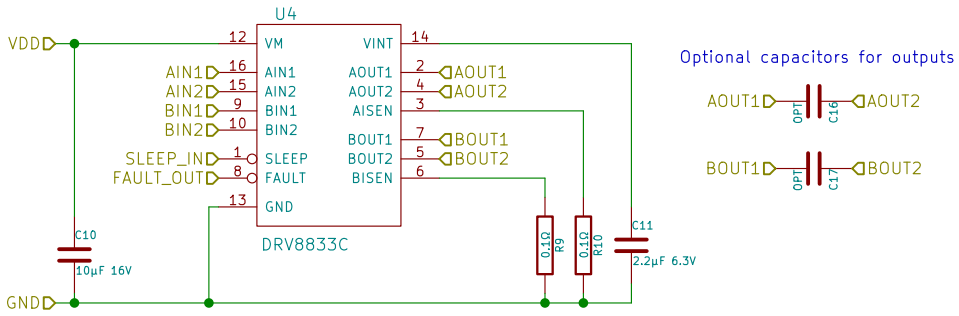

Sheet: /drv8833_2/
File: drv8833.sch

Title:

Size: A4	Date:	Rev:
KiCad E.D.A. kicad (2015-05-11 BZR 5650)-product		Id: 3/6

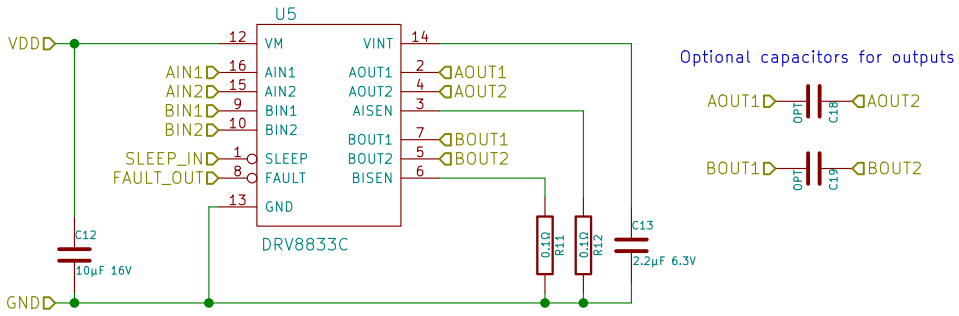

Sheet: /drv8833_3/
File: drv8833.sch

Title:

Size: A4	Date:	Rev:
KiCad E.D.A. kicad (2015-05-11 BZR 5650)-product		Id: 4/6

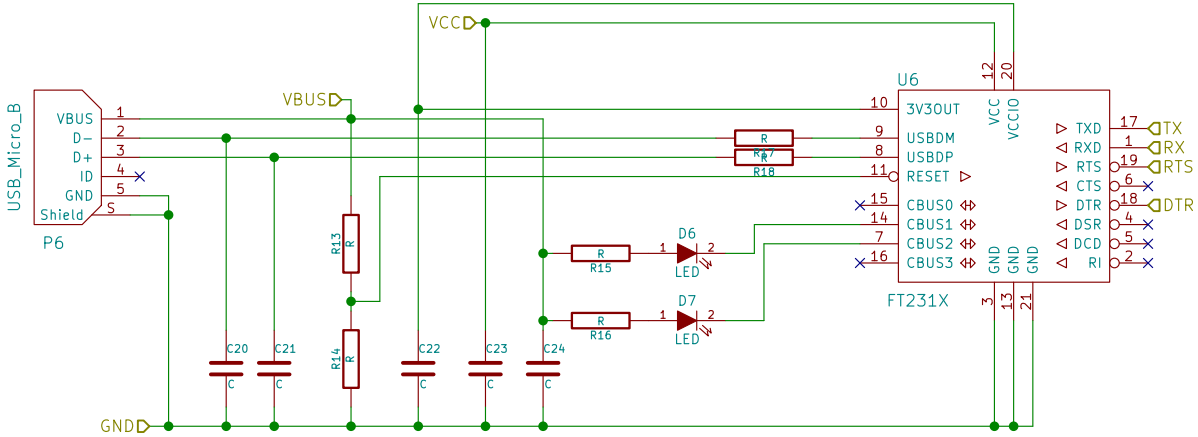

Sheet: /PC Interface/
File: pc_interface.sch

Title:

Size: A4	Date:	Rev:
KiCad E.D.A. kicad (2015-05-11 BZR 5650)-product		Id: 5/6

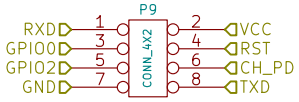

Sheet: /ESP8266 PTH Connector/
File: esp8266_pth.sch

Title:

Size: A4	Date:	**Rev:**
KiCad E.D.A. kicad (2015-05-11 BZR 5650)-product		Id: 6/6