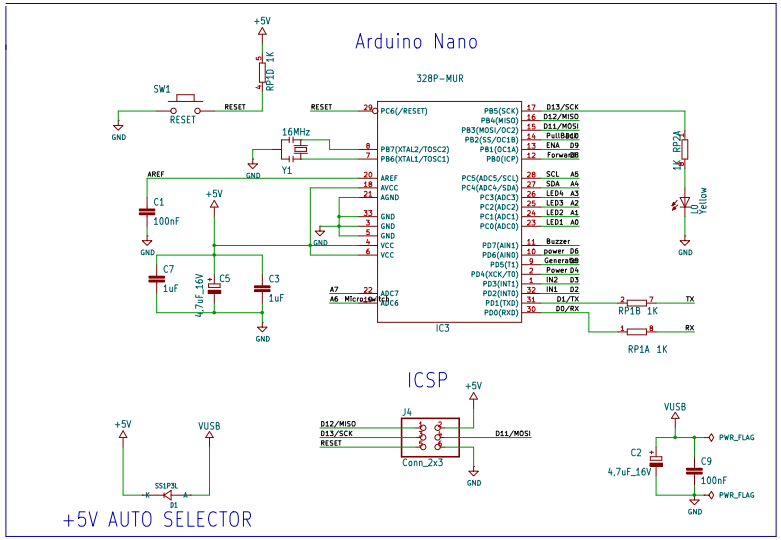
Arduino Nano
328P-MUR
SW1
RESET
RP1D 1K
16MHz
Y1
C1
100nF
C7
1uF
C5
4.7uF_16V
C3
1uF
IC3
RP2A
1K
LD
Yellow
RP1B 1K
RP1A 1K
TX
RX
ICSP
J4
Conn_2x3
D12/MISO
D13/SCK
RESET
D11/MOSI
+5V AUTO SELECTOR
VUSB
SS1P3L
D1
C2
4.7uF_16V
C9
100nF
PWR_FLAG

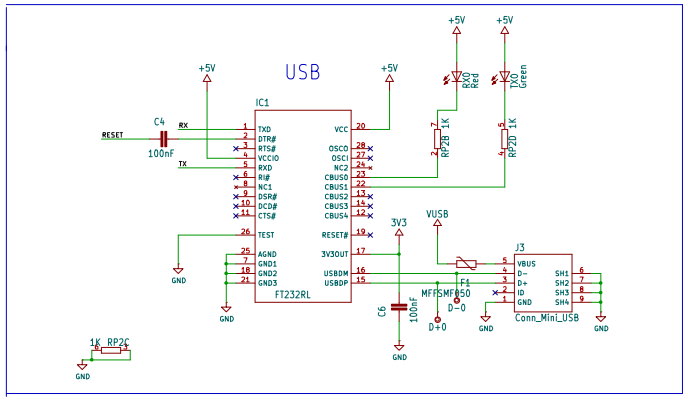
USB
IC1
FT232RL
C4
100nF
RESET
RX
TX
RP2B 1K
RP2D 1K
RXD
Red
TXD
Green
VUSB
3V3
J3
Conn_Mini_USB
MFFSMF050
D-0
D+0
C6
100nF
1K RP2C

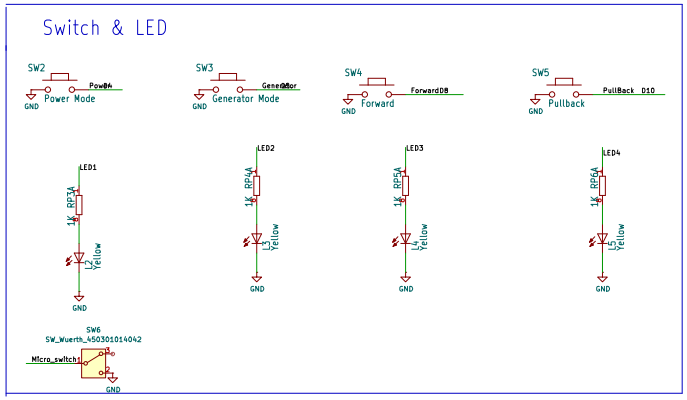
Switch & LED
SW2
Power Mode
SW3
Generator Mode
SW4
Forward
SW5
Pullback
LED1
LED2
LED3
LED4
RP3A
RP4A
RP5A
RP6A
1K
Yellow
SW6
SW_Wuerth_450301014042
Micro_switch1

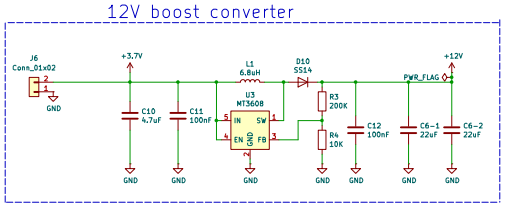
12V boost converter
J6
Conn_01x02
+3.7V
C10
4.7uF
C11
100nF
L1
6.8uH
U3
MT3608
D10
SS14
R3
200K
R4
10K
C12
100nF
C6-1
22uF
C6-2
22uF
PWR_FLAG
+12V

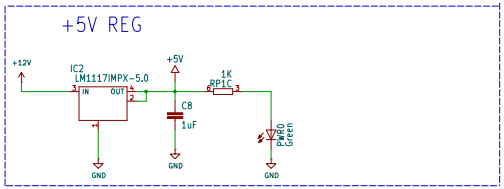
+5V REG
IC2
LM1117IMPX-5.0
C8
1uF
RP1C
1K
PWR
Green

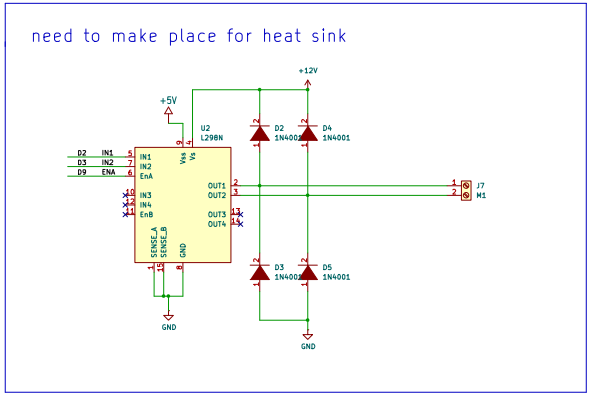
MOTOR DRIVER CKT
need to make place for heat sink
U2
L298N
D2
1N4001
D4
1N4001
D3
1N4001
D5
1N4001
J7
M1
+12V
+5V

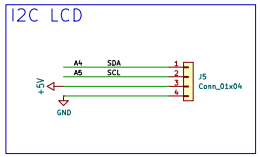
I2C LCD
A4
SDA
A5
SCL
J5
Conn_01x04

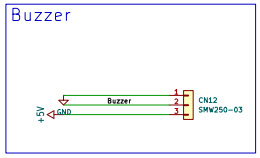
Buzzer
CN12
SMW250-03

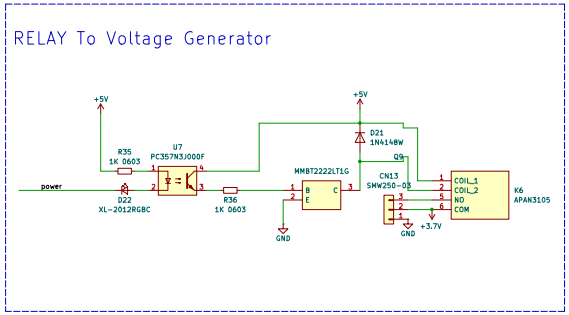
RELAY To Voltage Generator
power
R35
1K 0603
U7
PC357N3J000F
D22
XL-2012RGBC
R36
1K 0603
MMBT2222LT1G
D21
1N4148W
CN13
SMW250-03
K6
APAN3105
+3.7V