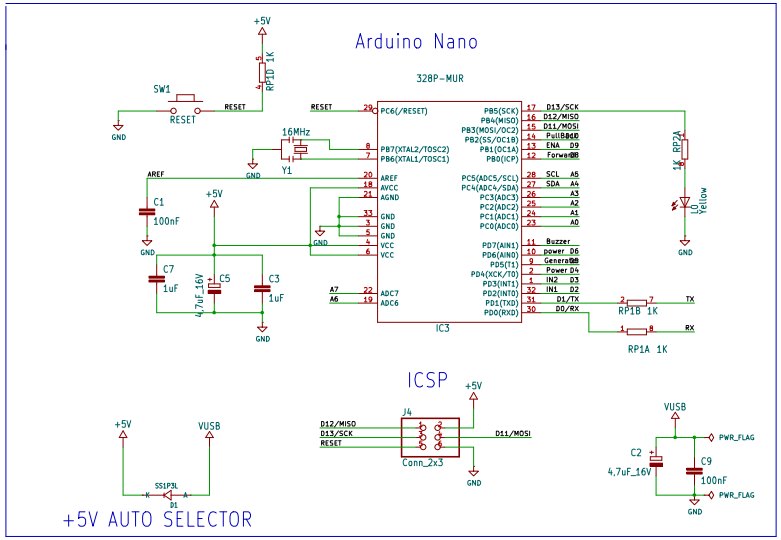
Arduino Nano
328P-MUR
IC3
SW1
RESET
16MHz
Y1
C1
100nF
C7
1uF
C5
4.7uF_16V
C3
1uF
RP2A
1K
L0
Yellow
RP1B 1K
RP1A 1K
ICSP
J4
Conn_2x3
D12/MISO
D13/SCK
RESET
D11/MOSI
+5V AUTO SELECTOR
VUSB
SS1P3L
D1
C2
4.7uF_16V
C9
100nF
PWR_FLAG

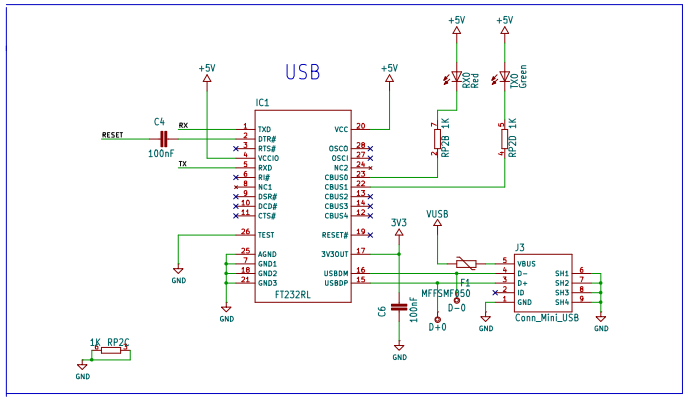
USB
IC1
FT232RL
C4
100nF
RESET
RX
TX
RP2B 1K
RP2D 1K
RXD
Red
TXD
Green
3V3
VUSB
J3
Conn_Mini_USB
MFFSMF050
C6
100nF
D-0
D+0
1K RP2C

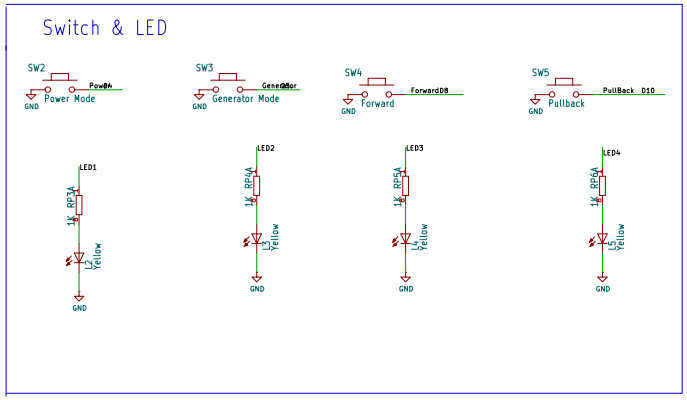
Switch & LED
SW2
Power Mode
SW3
Generator Mode
SW4
Forward
SW5
Pullback
LED1
LED2
LED3
LED4
RP3A
RP4A
RP5A
RP6A
1K
L3
Yellow

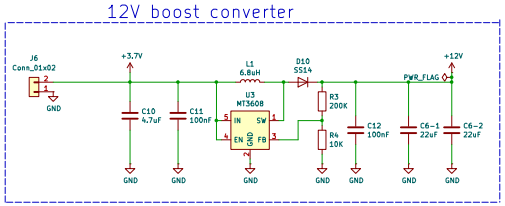
12V boost converter
J6
Conn_01x02
+3.7V
C10
4.7uF
C11
100nF
L1
6.8uH
U3
MT3608
D10
SS14
R3
200K
R4
10K
C12
100nF
C6-1
22uF
C6-2
22uF
PWR_FLAG
+12V

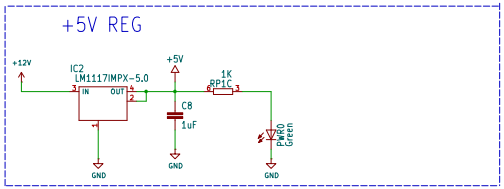
+5V REG
IC2
LM1117IMPX-5.0
C8
1uF
RP1C
1K
PWR0
Green

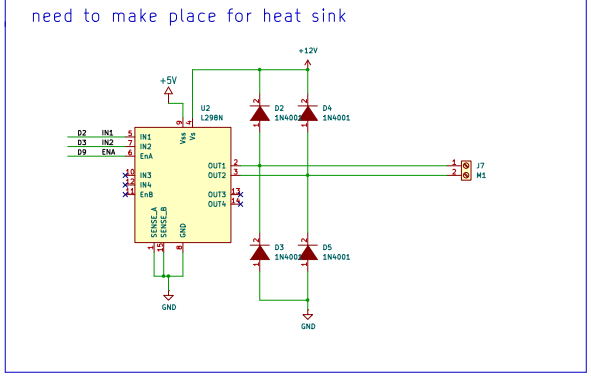
MOTOR DRIVER CKT
need to make place for heat sink
U2
L298N
D2
1N4001
D3
1N4001
D4
1N4001
D5
1N4001
J7
M1

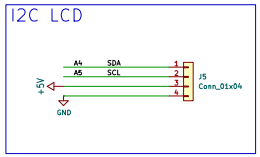
I2C LCD
A4
SDA
A5
SCL
J5
Conn_01x04

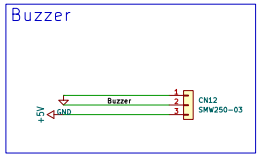
Buzzer
CN12
SMW250-03

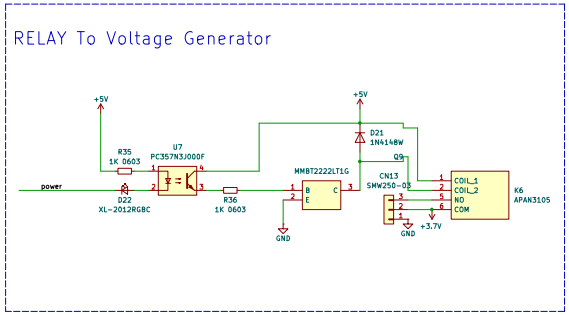
RELAY To Voltage Generator
power
D22
XL-2012RGBC
R35
1K 0603
U7
PC357N3J000F
R36
1K 0603
MMBT2222LT1G
D21
1N4148W
Q5
CN13
SMW250-03
K6
APAN3105
COIL_1
COIL_2
NO
COM
+3.7V