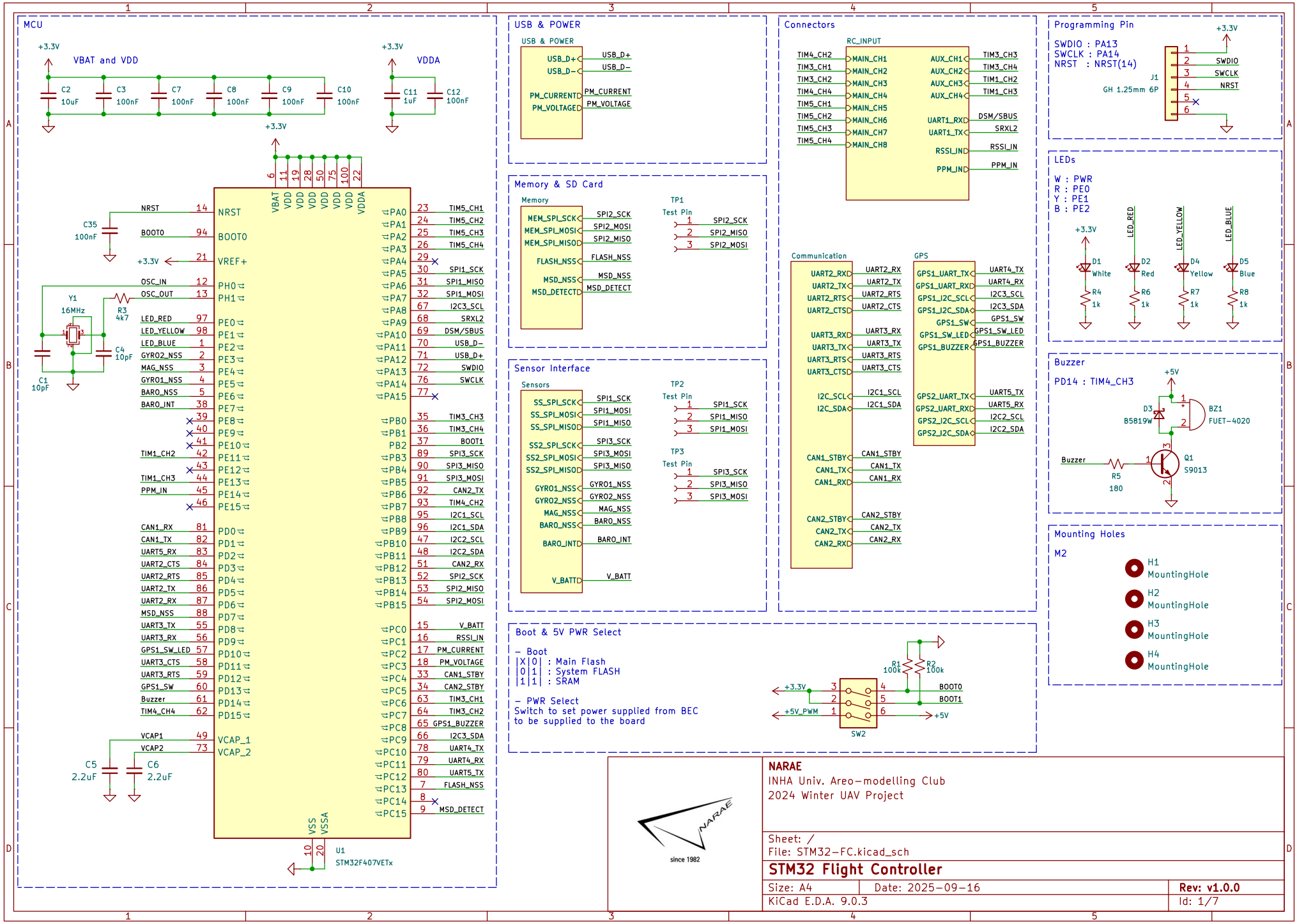
MCU
VBAT and VDD
VDDA
+3.3V
C2 10uF
C3 100nF
C7 100nF
C8 100nF
C9 100nF
C10 100nF
C11 1uF
C12 100nF
C35 100nF
Y1 16MHz
R3 4k7
C4 10pF
C1 10pF
C5 2.2uF
C6 2.2uF
U1
STM32F407VETx
USB & POWER
USB_D+
USB_D-
PM_CURRENT
PM_VOLTAGE
Memory & SD Card
Memory
MEM_SPI_SCK
MEM_SPI_MOSI
MEM_SPI_MISO
FLASH_NSS
MSD_NSS
MSD_DETECT
TP1
Test Pin
Sensor Interface
Sensors
SS_SPI_SCK
SS_SPI_MOSI
SS_SPI_MISO
SS2_SPI_SCK
SS2_SPI_MOSI
SS2_SPI_MISO
GYRO1_NSS
GYRO2_NSS
MAG_NSS
BARO_NSS
BARO_INT
V_BATT
TP2
TP3
Connectors
RC_INPUT
MAIN_CH1
MAIN_CH2
MAIN_CH3
MAIN_CH4
MAIN_CH5
MAIN_CH6
MAIN_CH7
MAIN_CH8
AUX_CH1
AUX_CH2
AUX_CH3
AUX_CH4
UART1_RX
UART1_TX
RSSI_IN
PPM_IN
DSM/SBUS
SRXL2
Communication
UART2_RX
UART2_TX
UART2_RTS
UART2_CTS
UART3_RX
UART3_TX
UART3_RTS
UART3_CTS
I2C_SCL
I2C_SDA
CAN1_STBY
CAN1_TX
CAN1_RX
CAN2_STBY
CAN2_TX
CAN2_RX
GPS
GPS1_UART_TX
GPS1_UART_RX
GPS1_I2C_SCL
GPS1_I2C_SDA
GPS1_SW
GPS1_SW_LED
GPS1_BUZZER
GPS2_UART_TX
GPS2_UART_RX
GPS2_I2C_SCL
GPS2_I2C_SDA
Programming Pin
SWDIO : PA13
SWCLK : PA14
NRST : NRST(14)
J1
GH 1.25mm 6P
LEDs
W : PWR
R : PE0
Y : PE1
B : PE2
D1 White
D2 Red
D4 Yellow
D5 Blue
R4 1k
R6 1k
R7 1k
R8 1k
Buzzer
PD14 : TIM4_CH3
+5V
D3 B5819W
BZ1 FUET-4020
Q1 S9013
R5 180
Mounting Holes
M2
H1 MountingHole
H2 MountingHole
H3 MountingHole
H4 MountingHole
Boot & 5V PWR Select
- Boot
|X|0| : Main Flash
|0|1| : System FLASH
|1|1| : SRAM
- PWR Select
Switch to set power supplied from BEC
to be supplied to the board
R1 100k
R2 100k
+5V_PWM
SW2
NARAE
since 1982
NARAE
INHA Univ. Areo-modelling Club
2024 Winter UAV Project
Sheet: /
File: STM32-FC.kicad_sch
STM32 Flight Controller
Size: A4
Date: 2025-09-16
Rev: v1.0.0
KiCad E.D.A. 9.0.3
Id: 1/7

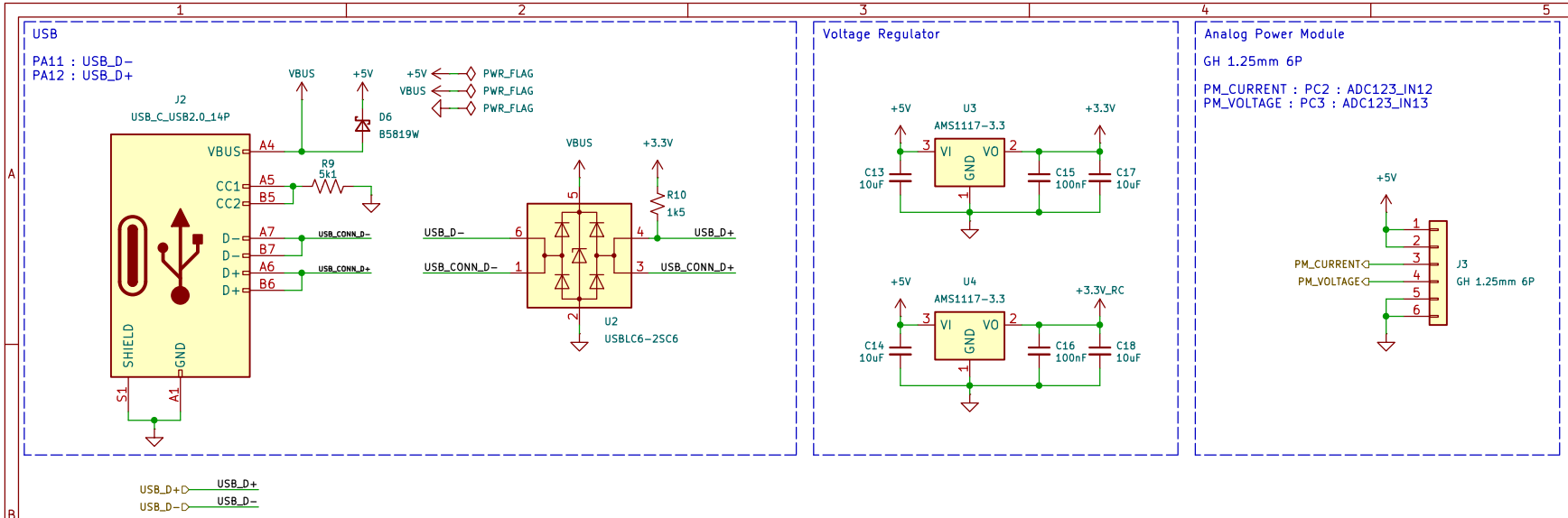

USB_D+ ▷ USB_D+
USB_D− ▷ USB_D−

since 1982

NARAE
INHA Univ. Areo−modelling Club
2024 Winter UAV Project

Sheet: /USB & POWER/
File: usb.kicad_sch

STM32 Flight Controller

Size: A4	Date: 2025−09−16	**Rev: v1.0.0**
KiCad E.D.A. 9.0.3		Id: 2/7

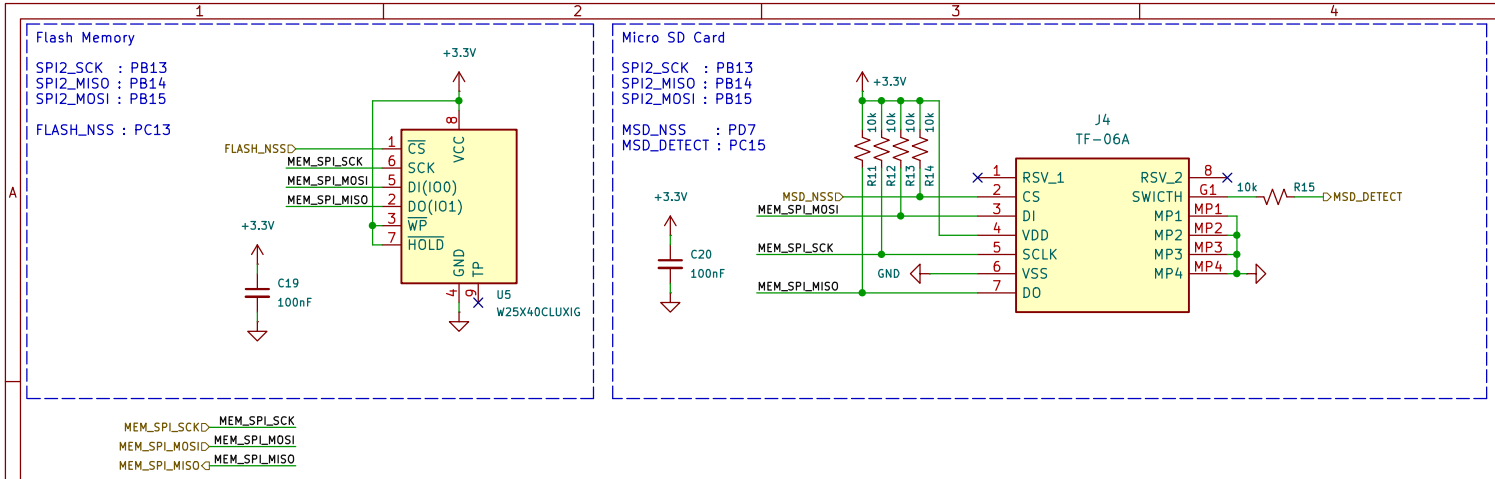

NARAE
INHA Univ. Areo-modelling Club
2024 Winter UAV Project

since 1982

Sheet: /Memory/
File: memory.kicad_sch

STM32 Flight Controller

Size: A4	Date: 2025-09-16	**Rev: v1.0.0**
KiCad E.D.A. 9.0.3		Id: 3/7

Accelerometer/Gyroscope1

SPI1_SCK : PA5
SPI1_MISO : PA6
SPI1_MOSI : PA7

GYRO1_NSS : PE5

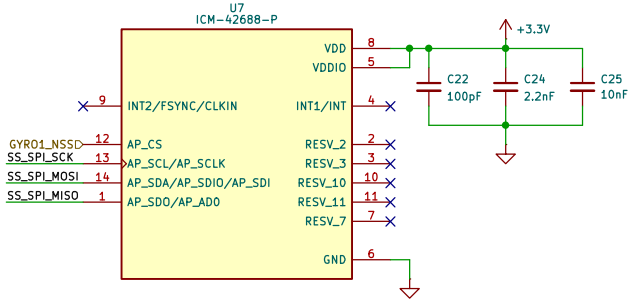

Magnetic Sensor

SPI3_SCK : PB3
SPI3_MISO : PB4
SPI3_MOSI : PB5

MAG_NSS : PE4

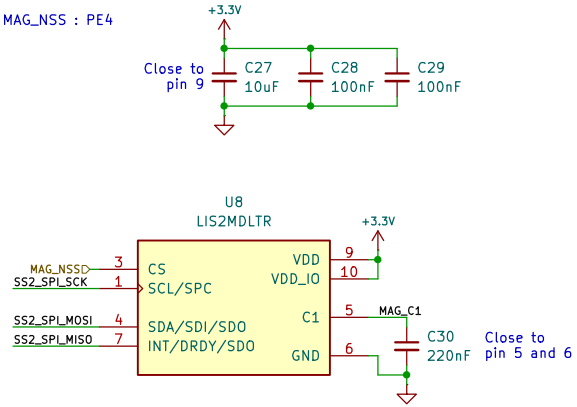

Battery Monitoring

JST ZH 1.5mm 2P

V_BATT : PC0 : ADC123_IN10

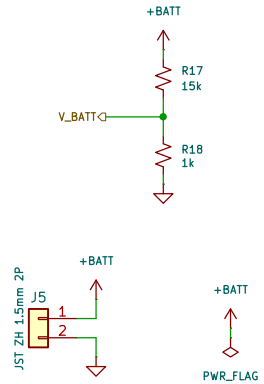

Accelerometer/Gyroscope2

SPI3_SCK : PB3
SPI3_MISO : PB4
SPI3_MOSI : PB5

GYRO2_NSS : PE3

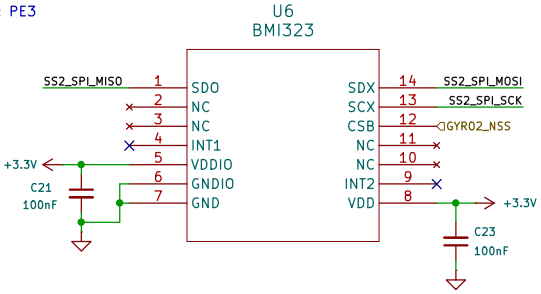

Barometeric Pressure Sensor

SPI1_SCK : PA5
SPI1_MISO : PA6
SPI1_MOSI : PA7

BARO_NSS : PE6
BARO_INT : PE7

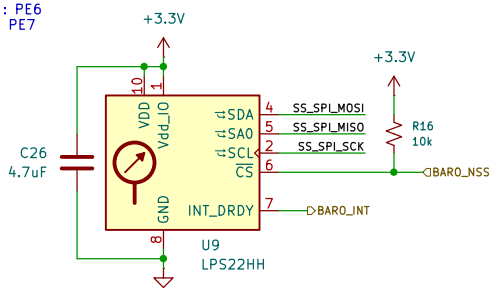

SS_SPI_SCKD — SS_SPI_SCK
SS_SPI_MOSID — SS_SPI_MOSI
SS_SPI_MISO — SS_SPI_MISO

SS2_SPI_SCKD — SS2_SPI_SCK
SS2_SPI_MOSID — SS2_SPI_MOSI
SS2_SPI_MISO — SS2_SPI_MISO

NARAE
since 1982

NARAE
INHA Univ. Areo-modelling Club
2024 Winter UAV Project

Sheet: /Sensors/
File: sensors.kicad_sch

STM32 Flight Controller

Size: A4	Date: 2025-09-16	**Rev: v1.0.0**
KiCad E.D.A. 9.0.3		Id: 4/7

PWM RC OUT

MAIN 1 : PA0 : TIM5_CH1
MAIN 2 : PA1 : TIM5_CH2
MAIN 3 : PA2 : TIM5_CH3
MAIN 4 : PA3 : TIM5_CH4
MAIN 5 : PC6 : TIM3_CH1
MAIN 6 : PC7 : TIM3_CH2
MAIN 7 : PB0 : TIM3_CH3
MAIN 8 : PB1 : TIM3_CH4

AUX1 : PB7 : TIM4_CH1
AUX2 : PE11 : TIM1_CH2
AUX3 : PE13 : TIM1_CH3
AUX4 : PE14 : TIM1_CH4

RCIN : PPM/SBUS/SRXL2
RSSI_IN : PC1 : ADC123_IN11

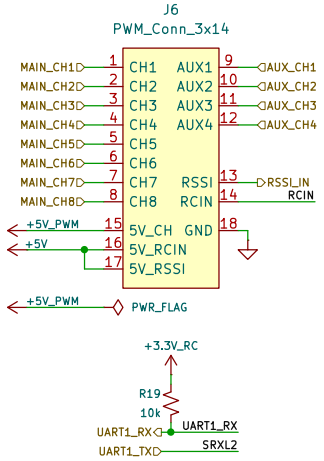

RCIN (SBUS/PPM/SRXL2)

2.54mm 3P

SBUS : PA10 : USART1_RX
PPM_IN : PD15 : TIM4_CH4
SRXL2 : PA9 : USART1_TX

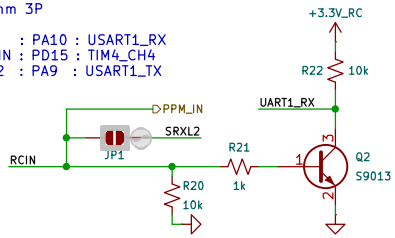

DSM

ZH 1.5mm 3P

PA10 : USART1_RX

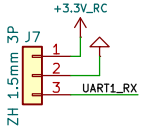

SRXL2

ZH 1.5mm 4P

PA9 : USART1_TX (Half Duplex)

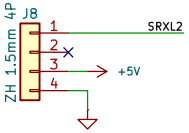

NARAE
INHA Univ. Areo-modelling Club
2024 Winter UAV Project

Sheet: /RC_INPUT/
File: io_RC_INPUT.kicad_sch

STM32 Flight Controller

Size: A4	Date: 2025-09-16	**Rev: v1.0.0**
KiCad E.D.A. 9.0.3		Id: 5/7

GPS1

GH 1.25mm 10P

GPS1_TX : PC10 : UART4_TX
GPS1_RX : PC11 : UART4_RX
GPS1_SCL : PA8 : I2C3_SCL
GPS1_SDA : PC9 : I2C3_SDA
GPS1_SW : PD13
GPS1_SW_LED : PD10
GPS1_BUZZER : PC8 : TIM8_CH3

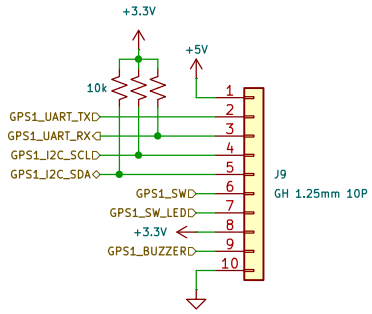

GPS2

GH 1.25mm 6P

GPS2_TX : PC12 : UART5_TX
GPS2_RX : PD2 : UART5_RX
GPS2_SCL : PB10 : I2C2_SCL
GPS2_SDA : PB11 : I2C2_SDA

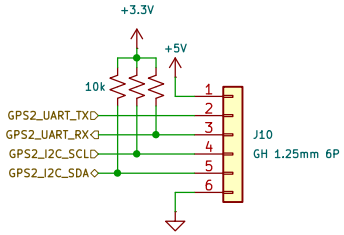

since 1982

NARAE
INHA Univ. Areo-modelling Club
2024 Winter UAV Project

Sheet: /GPS/
File: io_GPS.kicad_sch

STM32 Flight Controller

Size: A4	Date: 2025-09-16	**Rev: v1.0.0**
KiCad E.D.A. 9.0.3		Id: 6/7

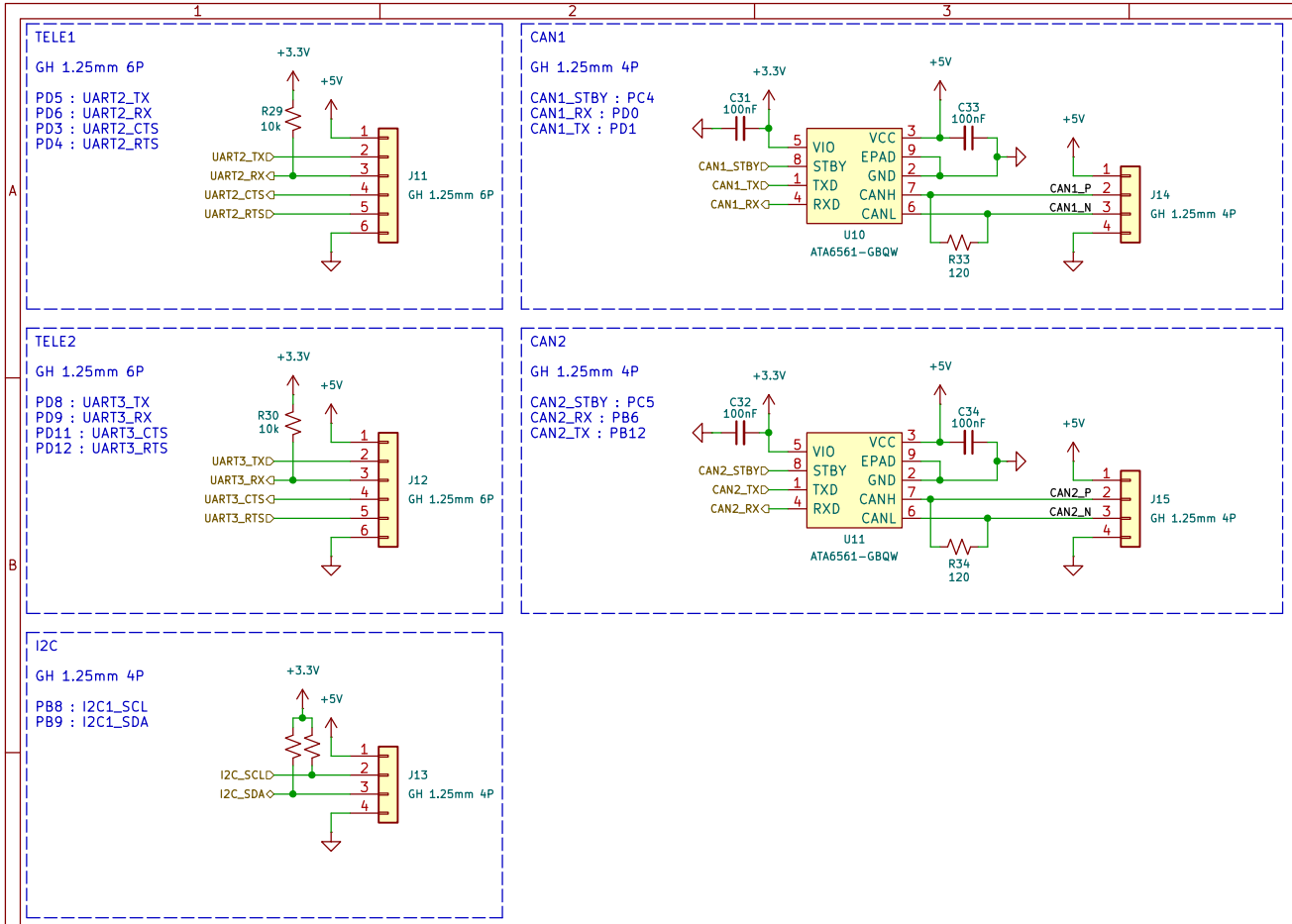

NARAE
INHA Univ. Areo-modelling Club
2024 Winter UAV Project

since 1982

Sheet: /Communication/
File: io_communication.kicad_sch

STM32 Flight Controller

Size: A4	Date: 2025-09-16	**Rev: v1.0.0**
KiCad E.D.A. 9.0.3		Id: 7/7