Prof. Sunwoo Lee
Last Modified: 20260119

HOUSEKEEPING

- *QUIZ 1 on WEEK 4 (during the LECTURE 4) using NTULearn + Lockdown Browser;*

  → *Try Practice Quizzes #1 ~ #4* ***= ASSIGNMENT 2***

EE2101 Circuit Analysis

Lecture 2

School of Electrical and Electronic Engineering
College of Engineering
Prof. Sunwoo Lee
Last Modified: 20260119

RECAP – Equivalent Resistance (beyond simple series or parallel configurations)

Find the relationship between R_1, R_2, and R_3 and R_a, R_b, and R_c

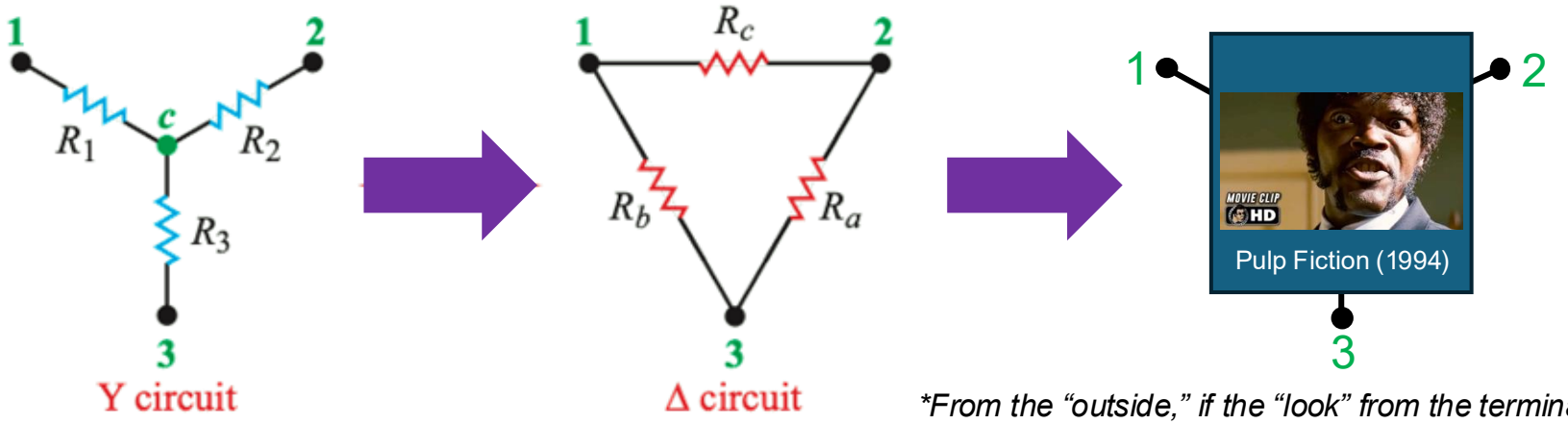

**From the "outside," if the "look" from the terminals 1, 2, 3 are the same, then they are the same*

i.e.,

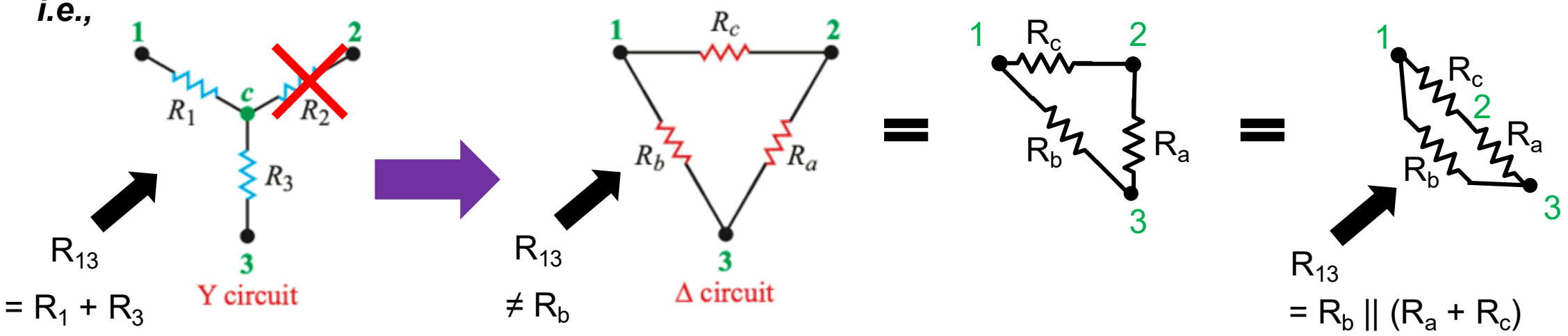

RECAP – Laws to Remember

Ohm's Law

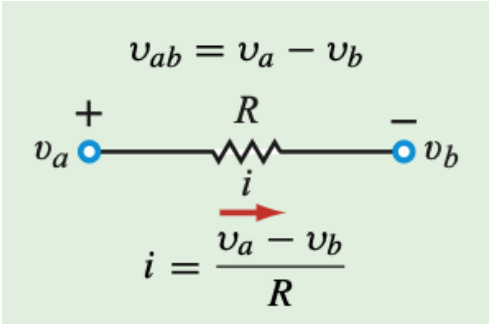

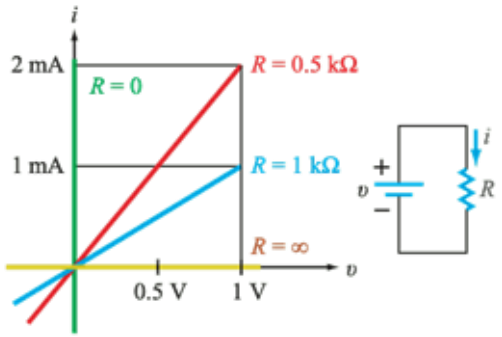

V = I·R

&

G = conductance = 1/R

KCL

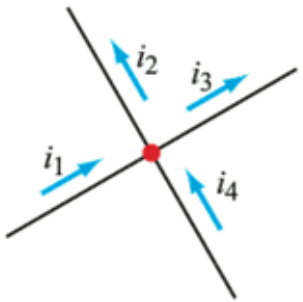

$$\mathbf{0} = \sum_{n=1}^{N} i_n = i_1 + i_4 + (-i_2) + (-i_3) \quad \rightarrow \quad i_1 + i_4 = i_2 + i_3$$

**Sign = entering (+) or existing (-) the node*

KVL

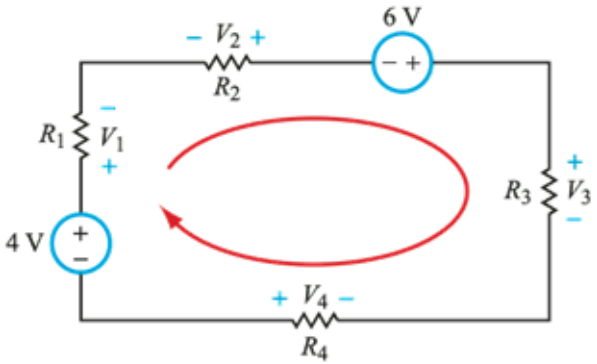

$$\mathbf{0} = \sum_{n=1}^{N} v_n = -4\,V + V_1 - V_2 - 6V + V_3 - V_4$$

**Sign = entering through a + terminal (+), or through a - terminal (-)*

RECAP – Notes on KCL / KVL / Power

- *Setting up a KCL at a node = nodal analysis → gives you voltages*
- *Setting up a KVL around a loop (mesh) = mesh analysis → gives you currents*

**Just remember that if you define mesh (i1 and i2) like this →*

the current through R_3 is the $(i_1 - i_2)$

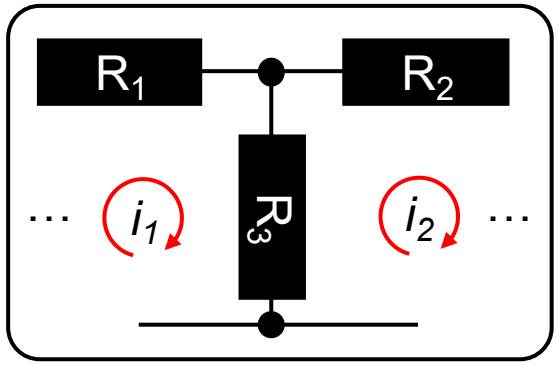

- Power = V·I (positive → dissipated | negative → supplied)

RACEP – Supernode

Once you are used to it KCL, you can indeed skip algebraic steps via supernode, but do not blindly memorize

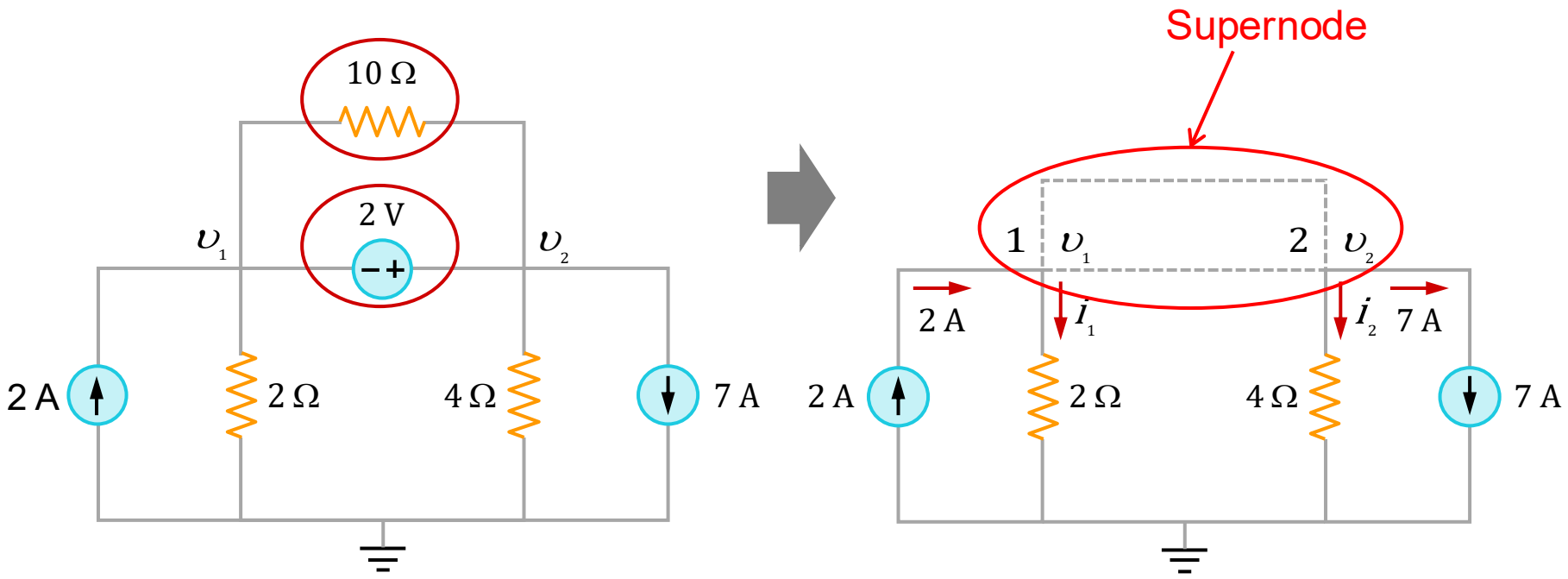

*Example 13 from **EE2101_CIRCUIT_ANALYSIS_LECTURE_1_AND_2_EXAMPLES_V1**

RACEP – Supermesh

Supermesh is a similar concept; it is just that it happens in KVL instead of KCL:

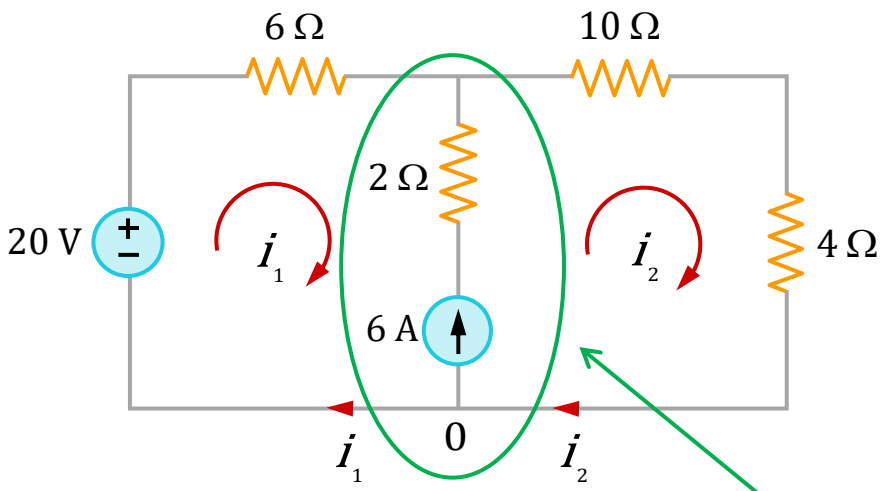

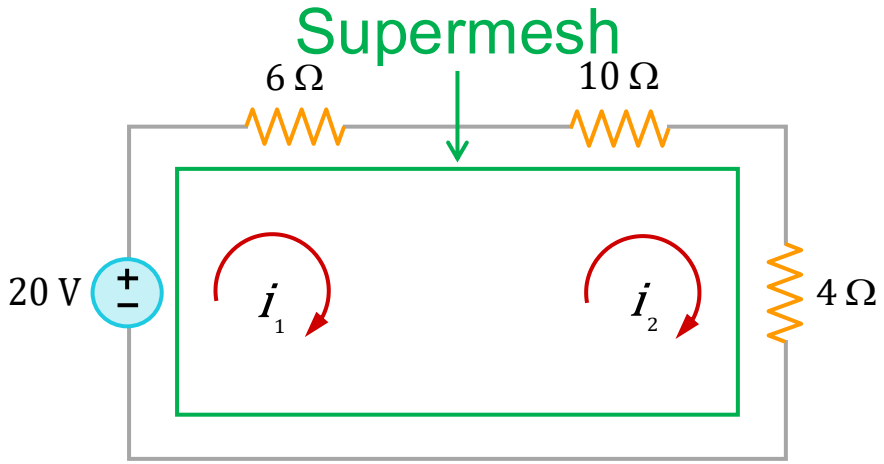

We can exclude <u>the current source</u> and any elements connected <u>in series</u>

*In supernode: we can exclude <u>the voltage source</u> and any elements connected <u>in parallel</u>

Again, the "extra" equation will come from the current source providing the relationship between i_1 and i_2

*In supernode: the extra equation comes from the voltage source providing relationship between v_1 and v_2

RECAP – Linear Equations → Matrix

KVL/KCL/Mesh/Nodal will often result in a multiple linear equations, which can be written in a matrix form:

$$\begin{bmatrix} G_{11} & \cdots & G_{1N} \\ \vdots & \ddots & \vdots \\ G_{N1} & \cdots & G_{NN} \end{bmatrix} \begin{bmatrix} V_1 \\ \vdots \\ V_N \end{bmatrix} = \begin{bmatrix} I_1 \\ \vdots \\ I_N \end{bmatrix} \qquad GV = I \qquad V = G^{-1}I$$

or

$$\begin{bmatrix} R_{11} & \cdots & R_{1N} \\ \vdots & \ddots & \vdots \\ R_{N1} & \cdots & R_{NN} \end{bmatrix} \begin{bmatrix} I_1 \\ \vdots \\ I_N \end{bmatrix} = \begin{bmatrix} V_1 \\ \vdots \\ V_N \end{bmatrix} \qquad RI = V \qquad I = R^{-1}V$$

Either way, for matrix A = $\begin{bmatrix} A_{11} & \cdots & A_{1N} \\ \vdots & \ddots & \vdots \\ A_{N1} & \cdots & A_{NN} \end{bmatrix}$ where

$$AB = C \rightarrow \begin{bmatrix} A_{11} & \cdots & A_{1N} \\ \vdots & \ddots & \vdots \\ A_{N1} & \cdots & A_{NN} \end{bmatrix} \begin{bmatrix} B_1 \\ \vdots \\ B_N \end{bmatrix} = \begin{bmatrix} C_1 \\ \vdots \\ C_N \end{bmatrix}$$

$$A^{-1} = \frac{adjoint(A)}{\det(A)}$$, or Cramer's rule*

(*suffice to know 2x2 and 3x3 cases)

Ex) For 2x2 matrix,

$$\begin{bmatrix} A_{11} & A_{12} \\ A_{21} & A_{22} \end{bmatrix} \begin{bmatrix} B_1 \\ B_2 \end{bmatrix} = \begin{bmatrix} C_1 \\ C_2 \end{bmatrix}$$

$$B_1 = \frac{\det\left(\begin{bmatrix} C_1 & A_{12} \\ C_2 & A_{22} \end{bmatrix}\right)}{\det(A)}$$

$$B_2 = \frac{\det\left(\begin{bmatrix} A_{11} & C_1 \\ A_{21} & C_2 \end{bmatrix}\right)}{\det(A)}$$

Ex) For 3x3 matrix, Tutorial 2…

RECAP – Common Confusions

- *Notation & Sign Convention*

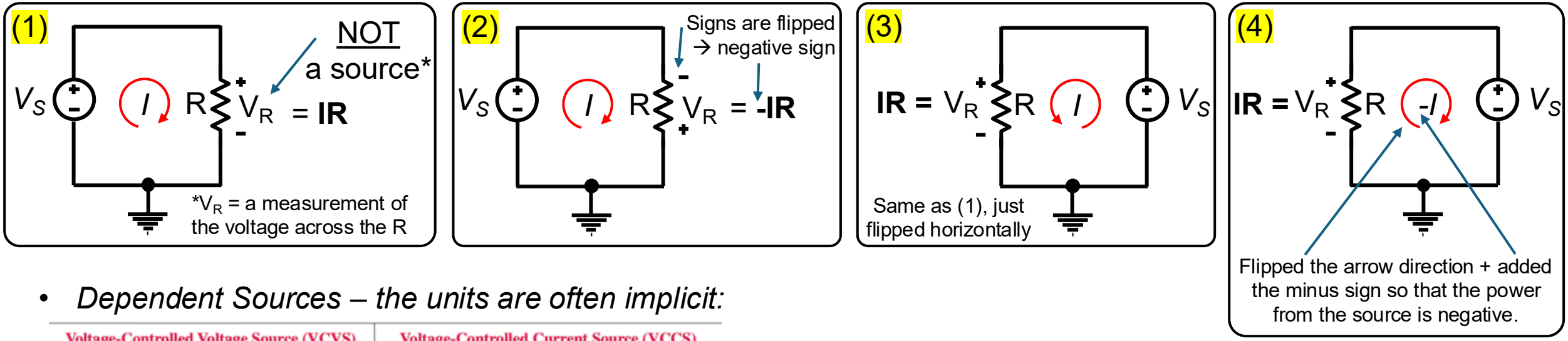

- *Dependent Sources – the units are often implicit:*

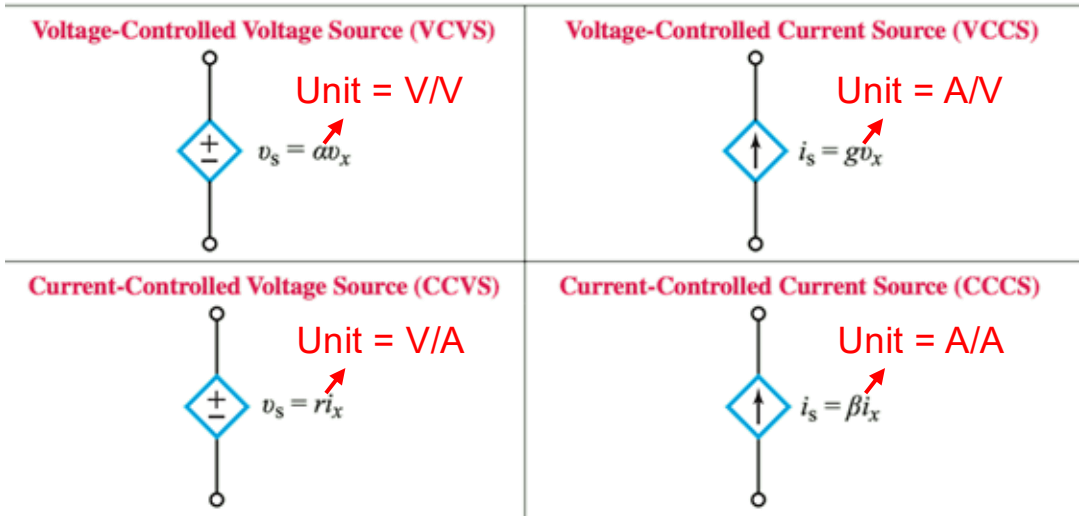

Prof. Sunwoo Lee
Last Modified: 20260119

Topics Overview

- **Linearity Property → Superposition**
- **Source Transformation**
- **Thevenin's Theorem ←→ Norton's Theorem**
- **Maximum Power Transfer**
- **Operational Amplifier (Op-Amp)**

Prof. Sunwoo Lee
Last Modified: 20260119

Linearity Property → Superposition

- **Linearity Property → Superposition**
- Source Transformation
- Thevenin's Theorem ←→ Norton's Theorem
- Maximum Power Transfer
- Operational Amplifier (Op-Amp)

Linearity Properties → Superposition

Recall the real resistor:

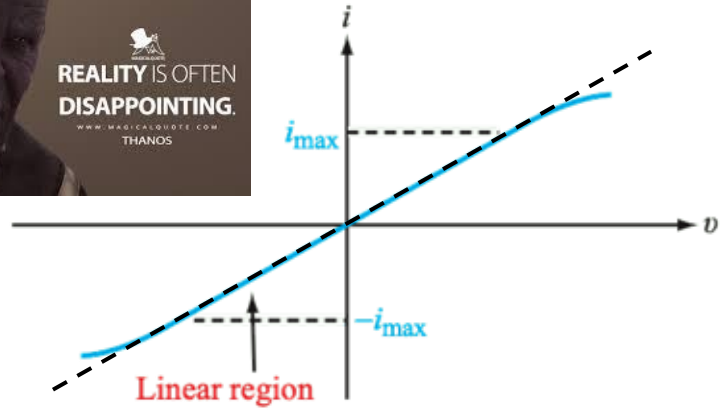

$$V = RI \rightarrow V_1 + V_2 = RI_1 + RI_2 = R(I_1 + I_2)$$

$$Hypothetically, if\ V = RI^2 \rightarrow V_1 + V_2 = R(I_1)^2 + R(I_2)^2 \neq R(I_1 + I_2)^2 = R(I_1^2 + 2I_1I_2 + I_2^2)$$

If i is increased by a constant k, then the voltage increases correspondingly by k, i.e., $kv = kRi$ (it has the scaling property).

If $v_1 = Ri_1,\ v_2 = Ri_2$, then applying $i_1 + i_2$ gives $v = R(i_1 + i_2) = Ri_1 + Ri_2 = v_1 + v_2$ (it has the additivity property).

Linearity Properties → Superposition

Food for thought: what do we do about a transistor (or anything non-linear)?

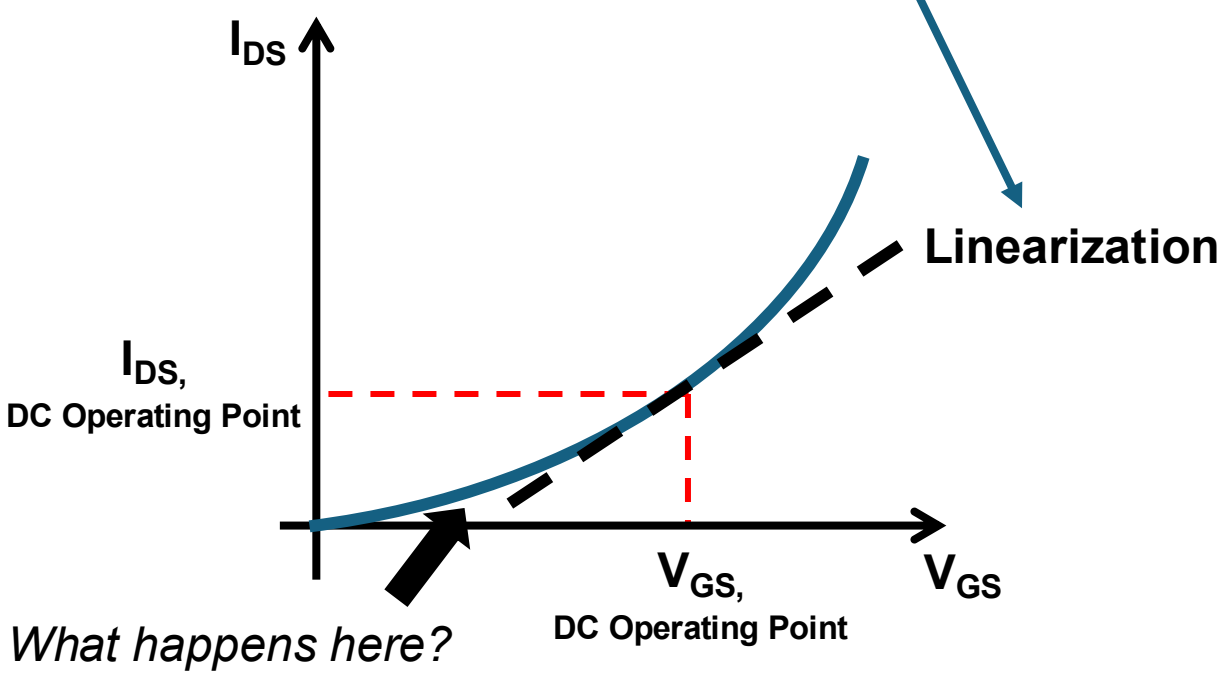

Recall:

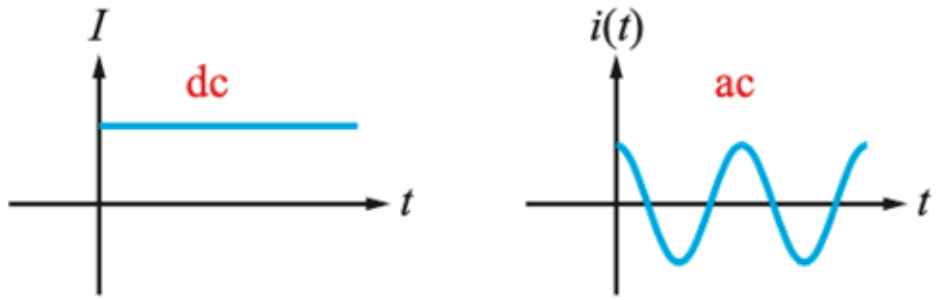

DC + AC:

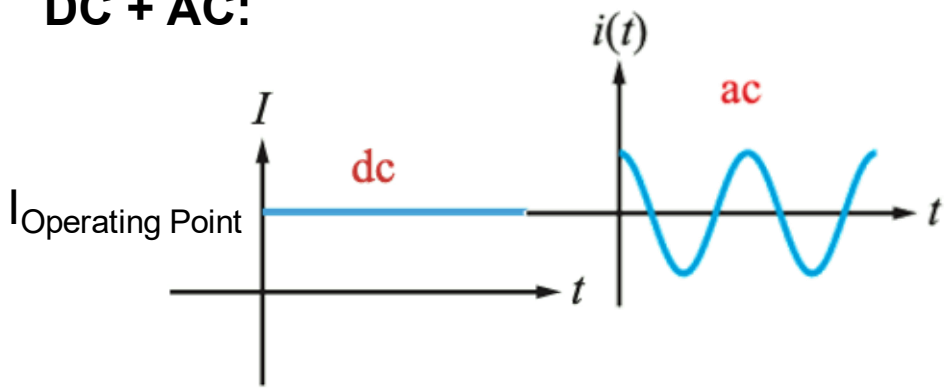

Linearity Properties → Superposition

- In general, a circuit is linear if it has both the additivity and scaling properties.
- A linear circuit is one whose output is directly proportional to its input.
- A linear circuit consists of linear elements, linear dependent sources and independent sources.
- A linear dependent source is a source whose output current or voltage is proportional only to the first power of a specified current or voltage variable in the circuit (*i.e.*, $\propto i$ or $\propto v$).

Superposition Principle:
Voltage across (or current through) an element in a linear circuit is the algebraic sum of the voltages across (or currents through) that element due to each independent source acting alone.

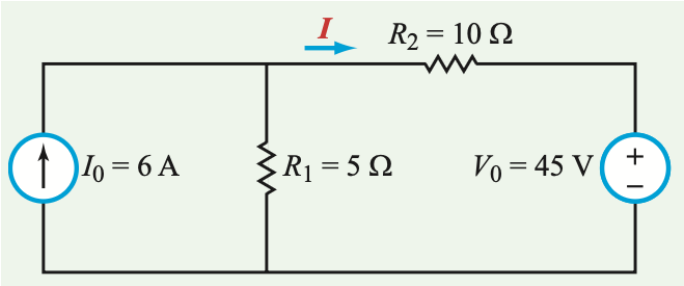

=

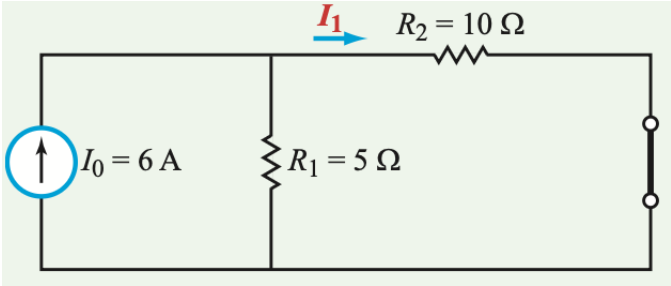

+

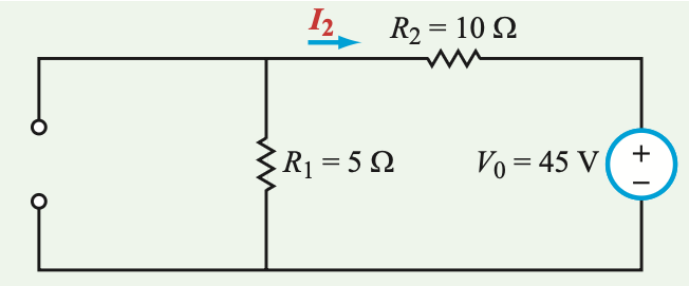

$I = I_1 + I_2$

Linearity Properties → Superposition

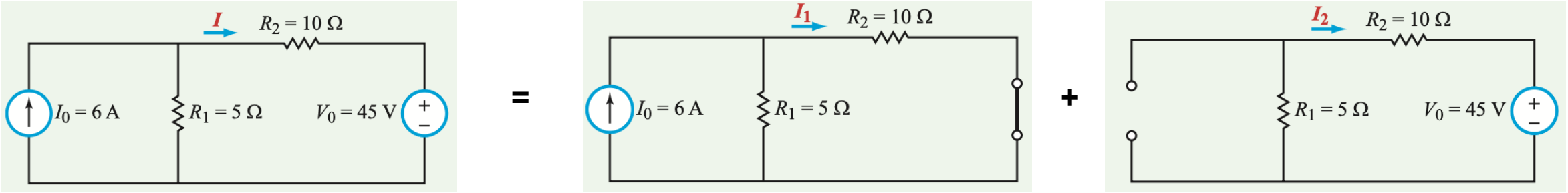

$I = I_1 + I_2$

1. Turn off all independent sources except one source. Find the output (voltage or current) due to that active source using the techniques learned previously.
2. Repeat step 1 for each of the other independent sources.
3. Find the total contribution by adding algebraically all the contributions due to the independent sources.

*Replace every voltage source by 0 V (or a short-circuit), and every current source by 0 A (or an open-circuit).

**It can help reduce a complex circuit to a simpler circuit.

Source Transformation

- Linearity Property → Superposition
- **Source Transformation**
- Thevenin's Theorem ←→ Norton's Theorem
- Maximum Power Transfer
- Operational Amplifier (Op-Amp)

Source Transformation

A **source transformation** is the process of replacing a voltage source v_s in series with a resistor R by a current source i_s in parallel with a resistor R, or vice-versa.

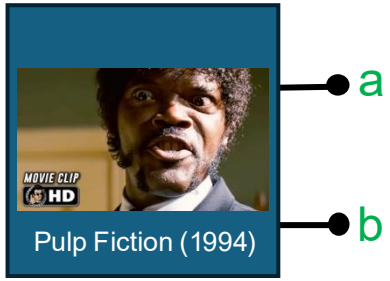

a

b

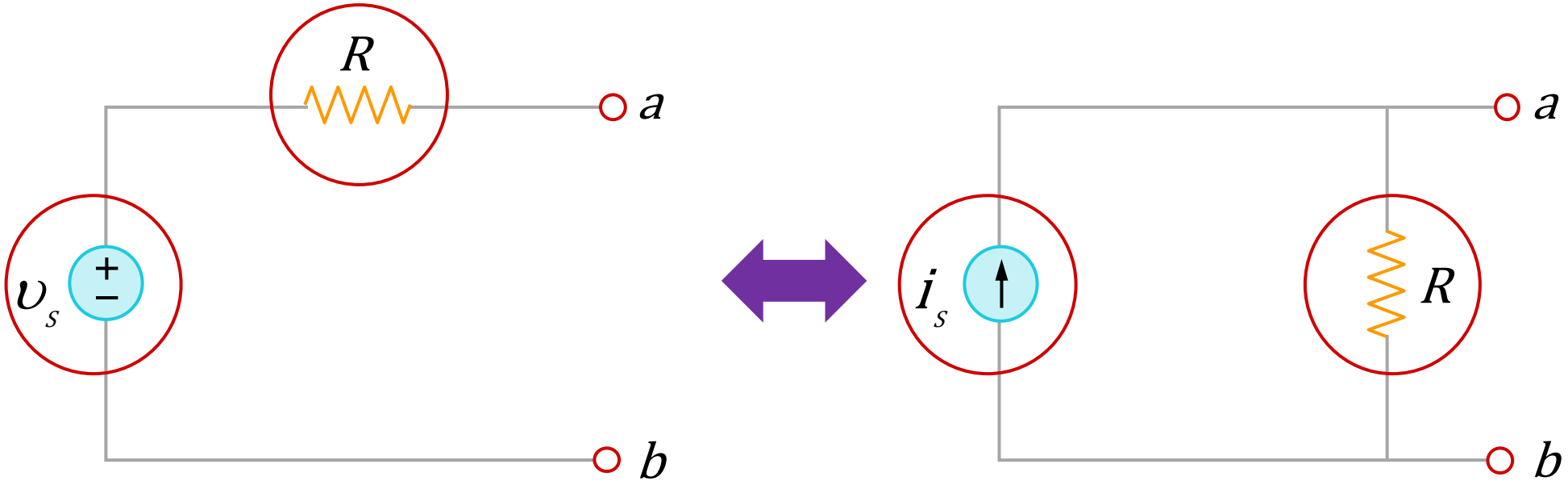

School of Electrical and Electronic Engineering
College of Engineering
Prof. Sunwoo Lee
Last Modified: 20260119

Source Transformation

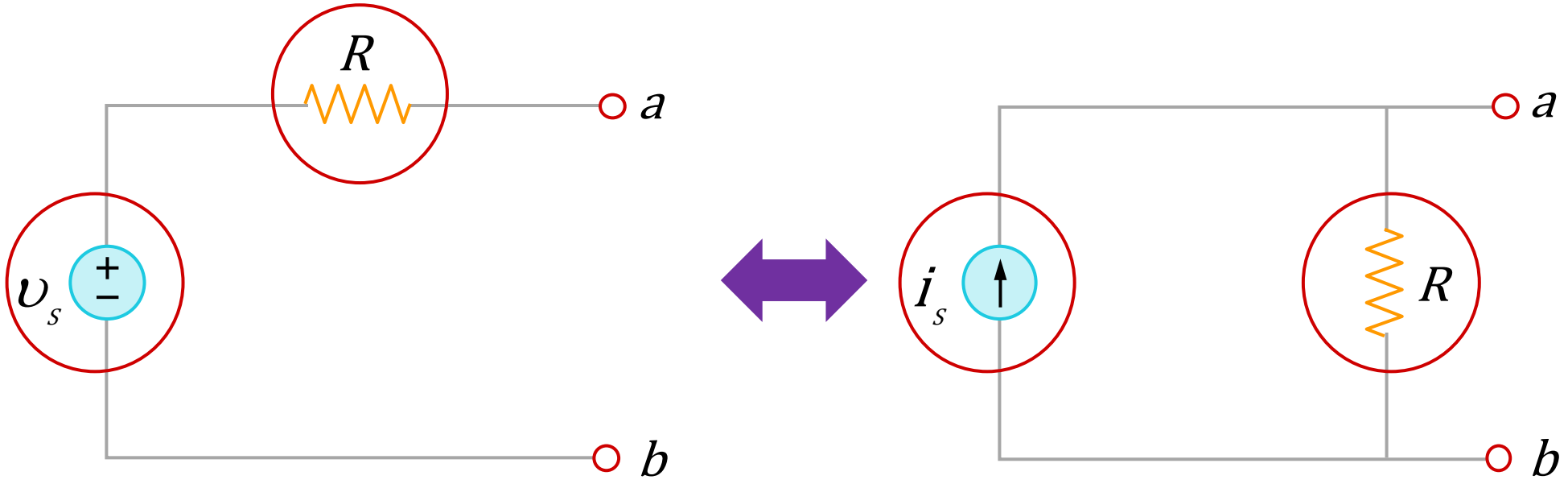

The two circuits are equivalent since they have the same v- i relationship at terminals a-b.

→ If the sources are turned off, the equivalent resistance at terminals a-b in both circuits is $\boldsymbol{R}$.

→ <u>when terminals a-b are short-circuited</u>, the short-circuit current i_{sc} flowing from a-b should be the same.

Therefore, $\boldsymbol{i_s = v_s / R}$

Source Transformation

Source transformation also applies to dependent sources, provided we carefully handle the dependent variable:

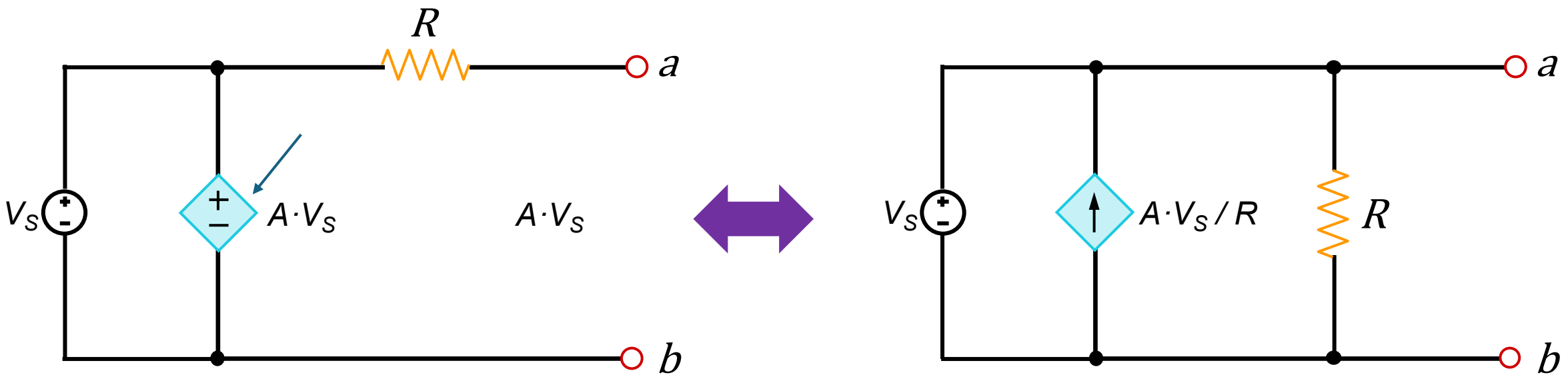

Prof. Sunwoo Lee
Last Modified: 20260119

Thevenin's Theorem ←→ Norton's Theorem

- Linearity Property → Superposition
- Source Transformation
- **Thevenin's Theorem ←→ Norton's Theorem**
- Maximum Power Transfer
- Operational Amplifier (Op-Amp)

Thevenin's Theorem ←→ Norton's Theorem

In practice, only the load of a circuit is variable while the rest of the circuits are fixed.

Each time the load is changed, the entire circuit needs to be analysed all over again.

To avoid this problem, the Thevenin's theorem provides a technique whereby the fixed part of the circuit is replaced by an equivalent circuit.

Also, recall:

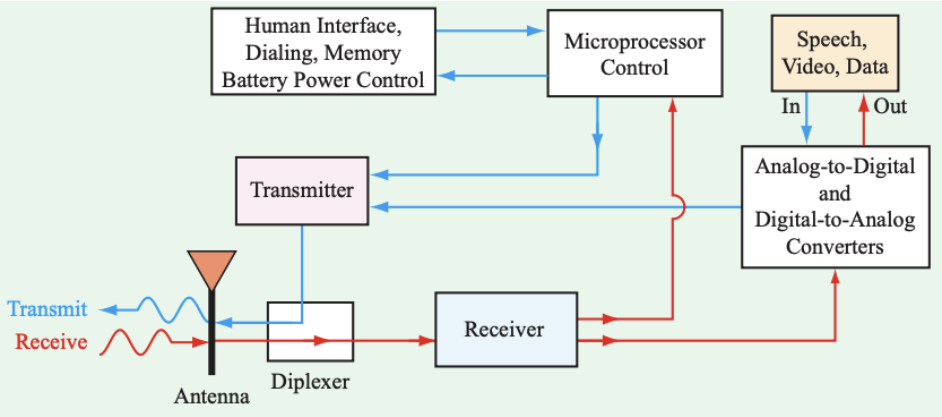

Thevenin's Theorem ←→ Norton's Theorem

Thevenin's Theorem: a linear two-terminal circuit can be replaced by an equivalent circuit consisting of a voltage source V_{Th} in series with a resistor R_{Th}, where V_{Th} is the open-circuit voltage at the terminals and R_{Th} is the input or equivalent resistance at the terminals when the **independent sources** are turned off.

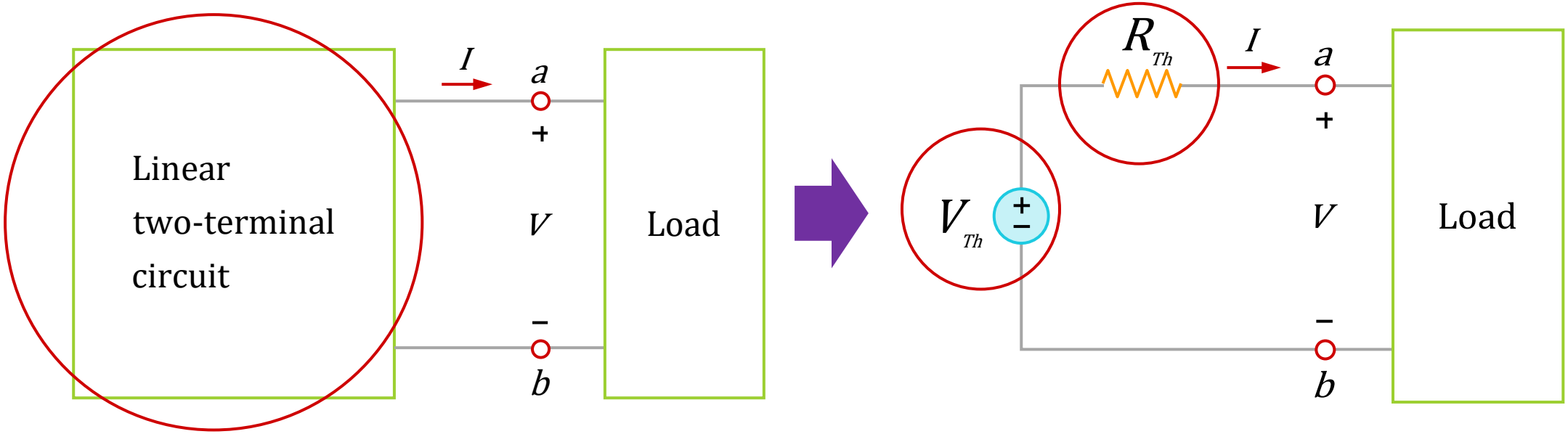

Thevenin's Theorem ←→ Norton's Theorem

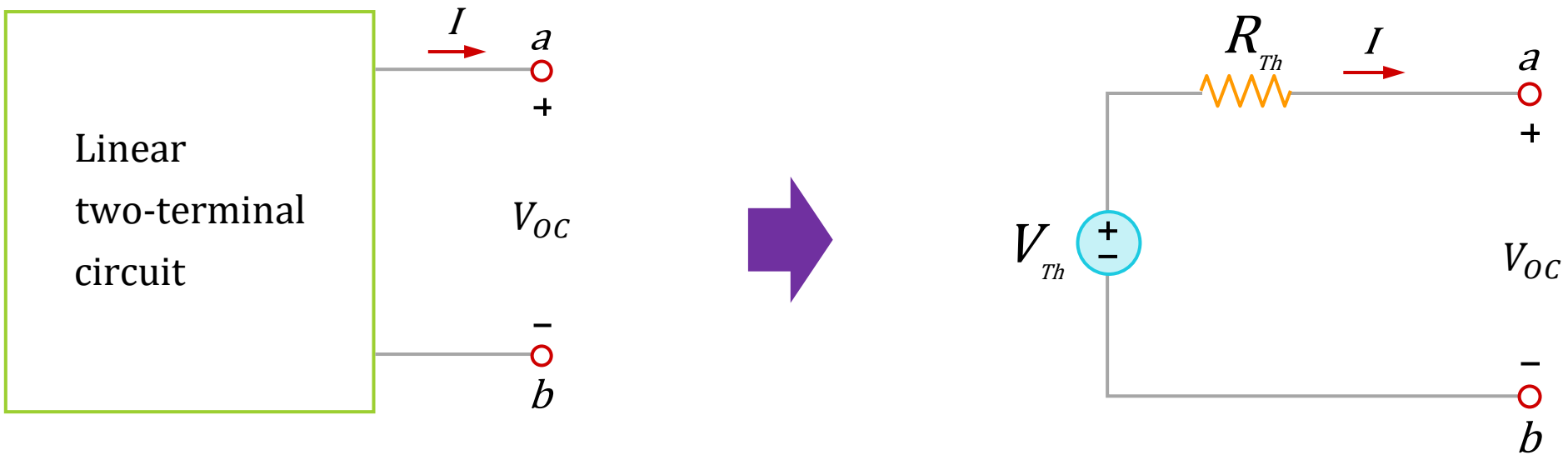

V_{Th}= Open Circuit Voltage (V_{OC})

R_{Th}= Resistance between terminals a and b, when all the INDEPENDENT (<u>NOT</u> dependent) sources are set to 0.

$R_{Th} = R_{in}$

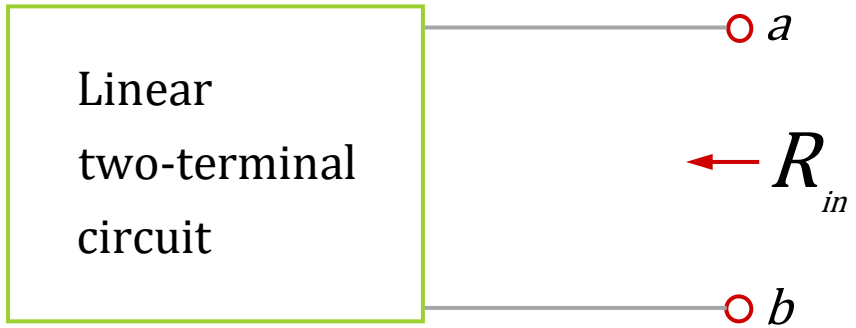

Thevenin's Theorem ←→ Norton's Theorem

Finding $V_{Th} = V_{OC}$ is usually straight forward.

Finding R_{Th} is more involved.

To find R_{Th}, imagine you are trying to measure the resistance of the circuit with voltmeter, by

1) applying a voltage* (v_O) to the circuit and
2) measuring how much current (i_O) flows into the circuit because of the voltage (v_O).

*The choice of voltage is arbitrary, often 1 V is chosen for simplicity.

**We can also apply i_O and measure v_O instead.

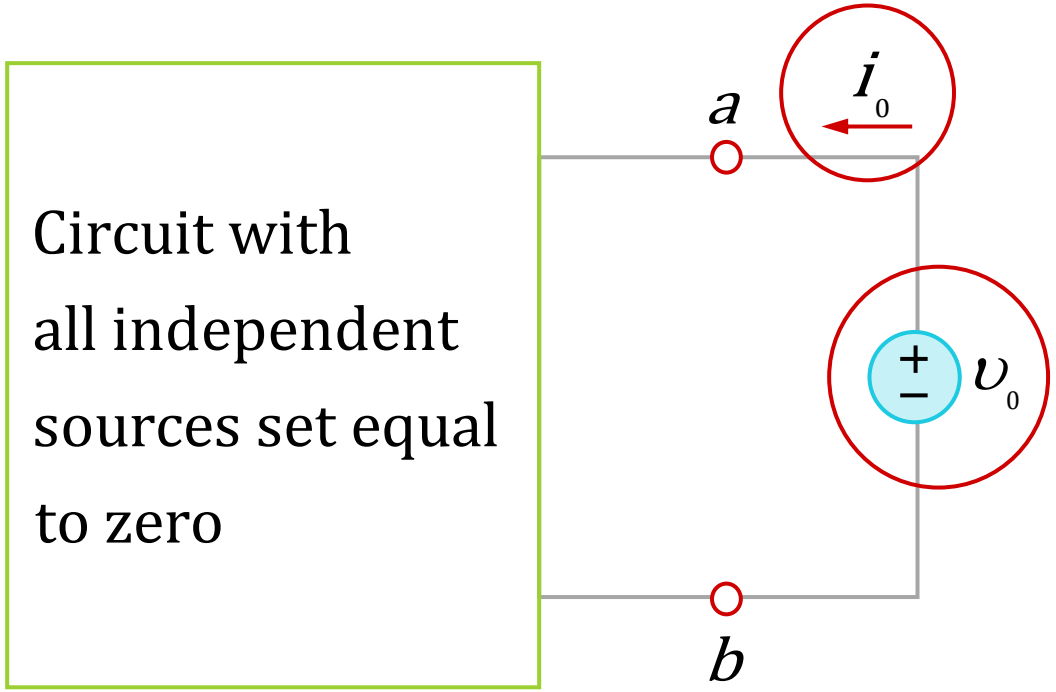

$$R_{Th} = \frac{v_0}{i_0}$$

Thevenin's Theorem ←→ Norton's Theorem

Once the Thevenin equivalent circuit is found, the current I_L through the load and the voltage V_L across the load are easily determined:

$$I_L = \frac{V_{Th}}{R_{Th} + R_L}$$

$$V_L = R_L I_L = \frac{R_L}{R_{Th} + R_L} V_{Th}$$

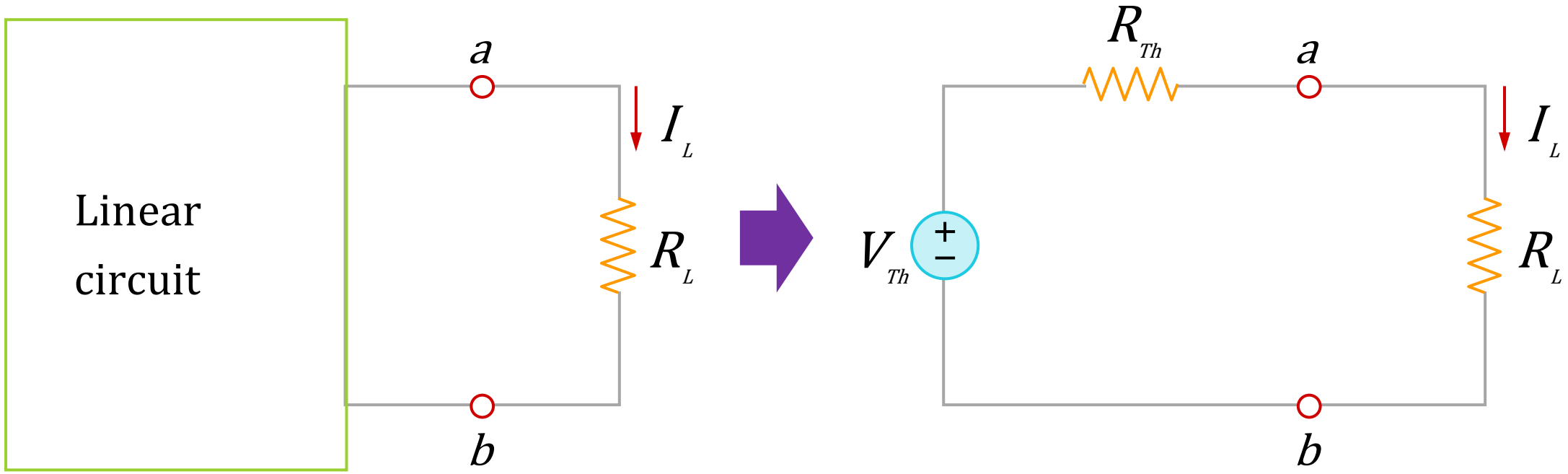

Thevenin's Theorem ←→ Norton's Theorem

Norton's theorem is the source-transformed version of the Thevenin's theorem:

Norton's theorem states that a linear two-terminal circuit can be replaced by an equivalent circuit consisting of a current source I_N in parallel with a resistor R_N, where I_N is the short-circuit current through the terminals and R_N is the input or equivalent resistance at the terminals when the independent sources are turned off.

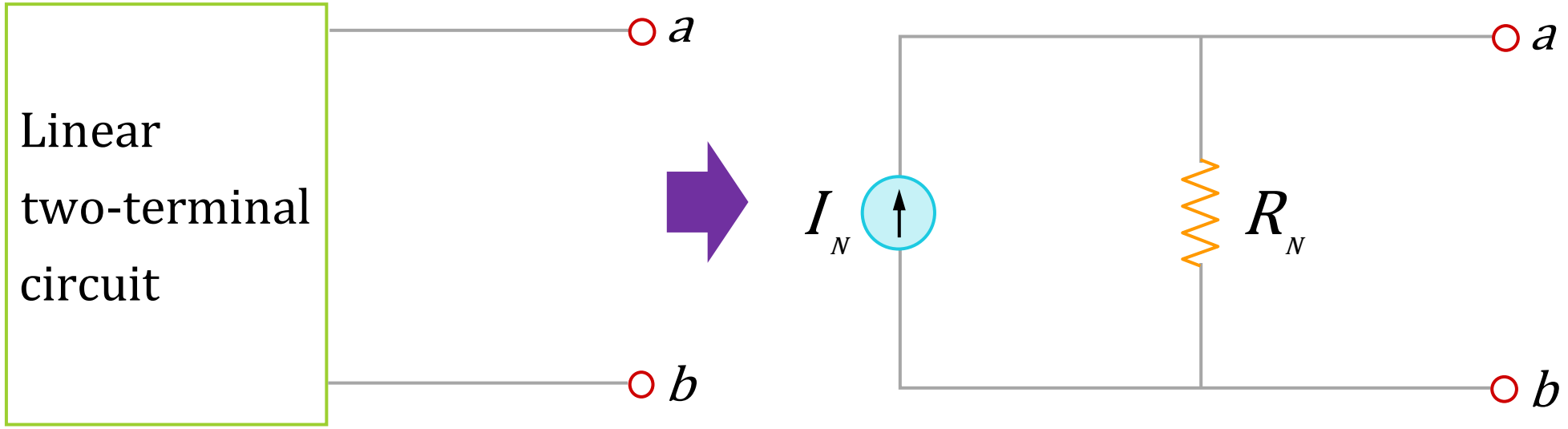

I_N = Short Circuit Current (I_{SC}) – short terminals a & b

$R_N = R_{Th}$

Thevenin's Theorem ←→ Norton's Theorem

In summary:

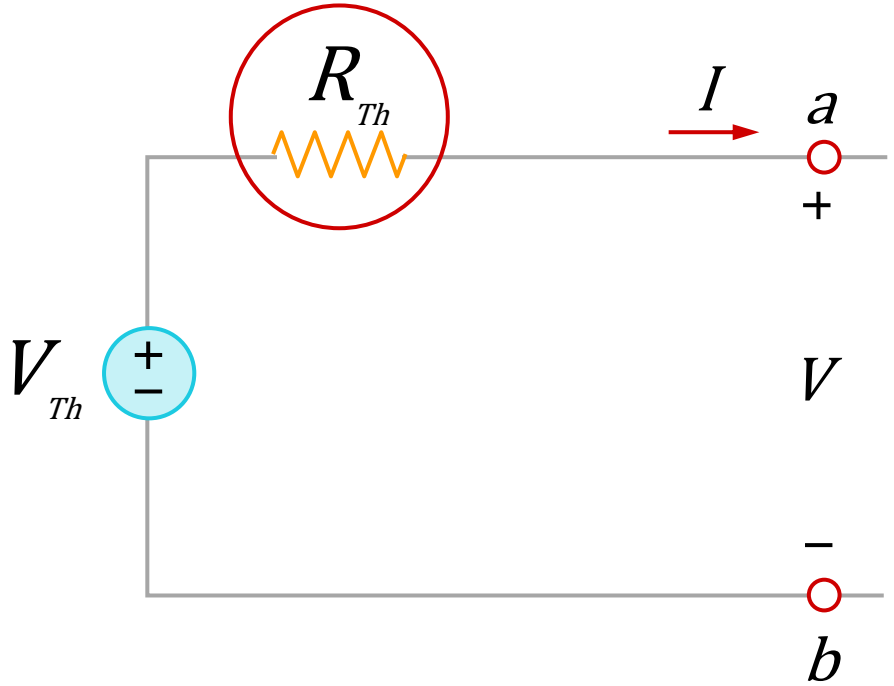

Thevenin Equivalent Circuit

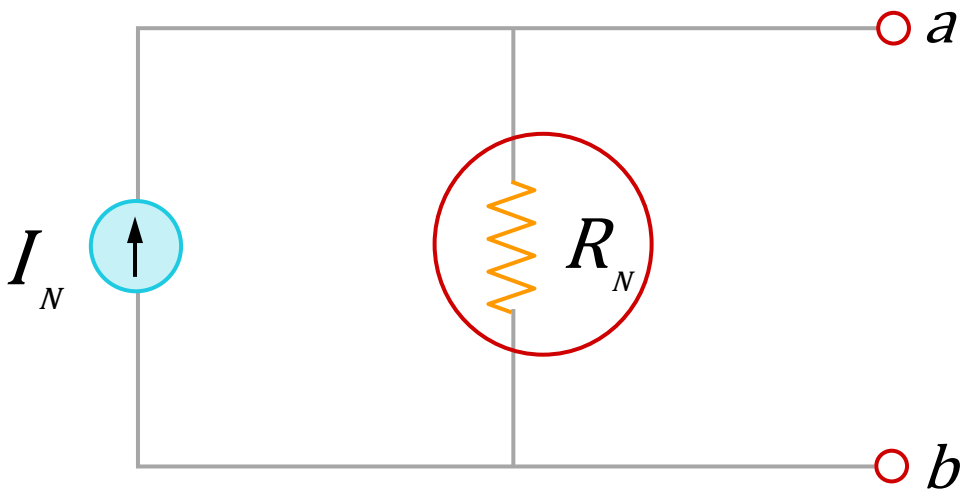

Norton Equivalent Circuit

$$R_N = R_{Th}$$

$$V_{Th} = v_{oc}$$

$$R_{Th} = \frac{v_{oc}}{i_{sc}}$$

Thevenin's Theorem ←→ Norton's Theorem

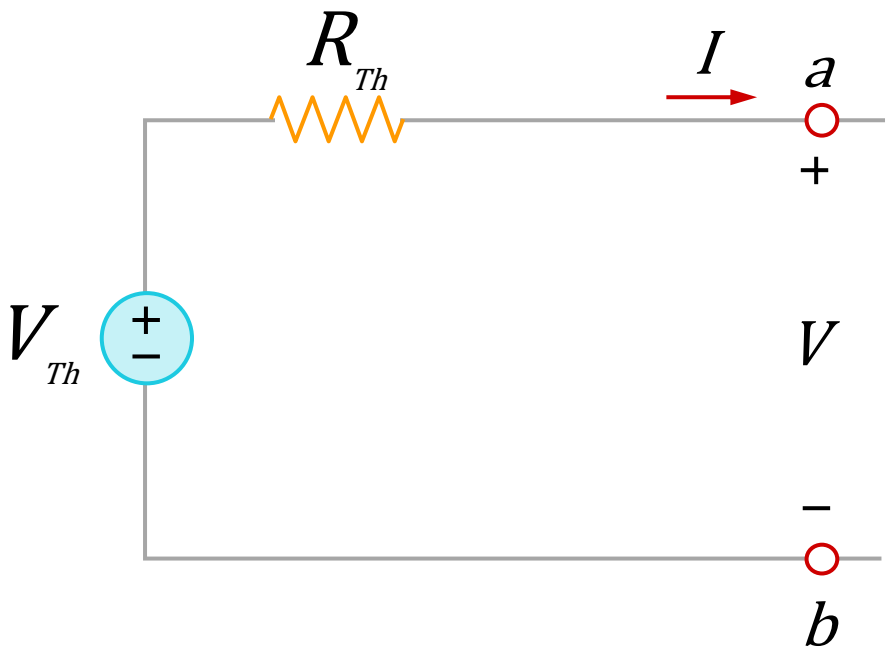

Thevenin Equivalent Circuit

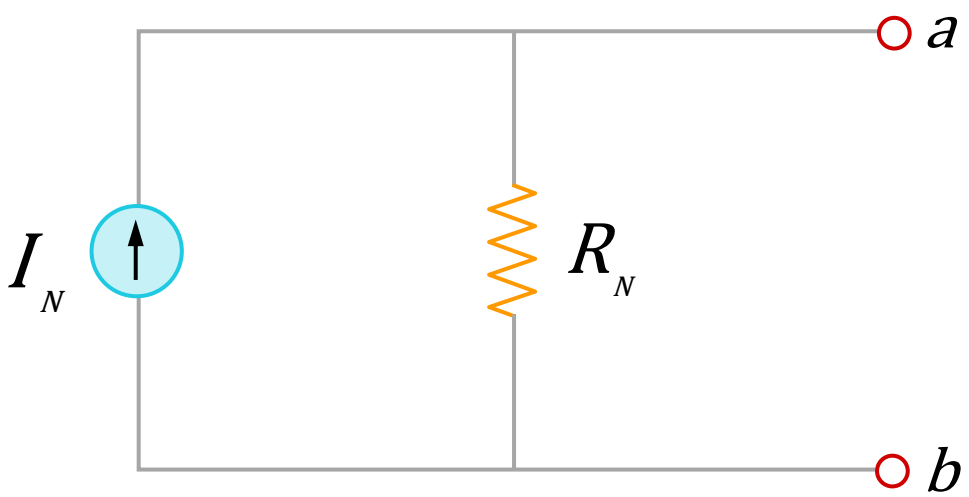

Norton Equivalent Circuit

Looks a bit like these from Lecture 1:

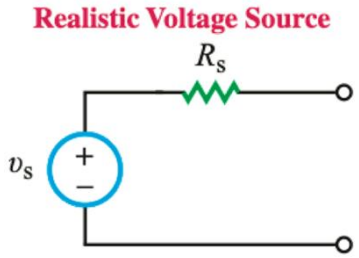

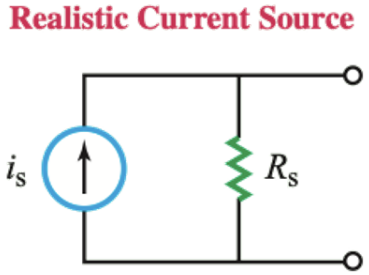

Prof. Sunwoo Lee
Last Modified: 20260119

Maximum Power Transfer

- Linearity Property → Superposition
- Source Transformation
- Thevenin's Theorem ←→ Norton's Theorem
- **Maximum Power Transfer**
- Operational Amplifier (Op-Amp)

Maximum Power Transfer

Suppose that the entire circuit is replaced by its Thevenin equivalent circuit except for the load as shown:

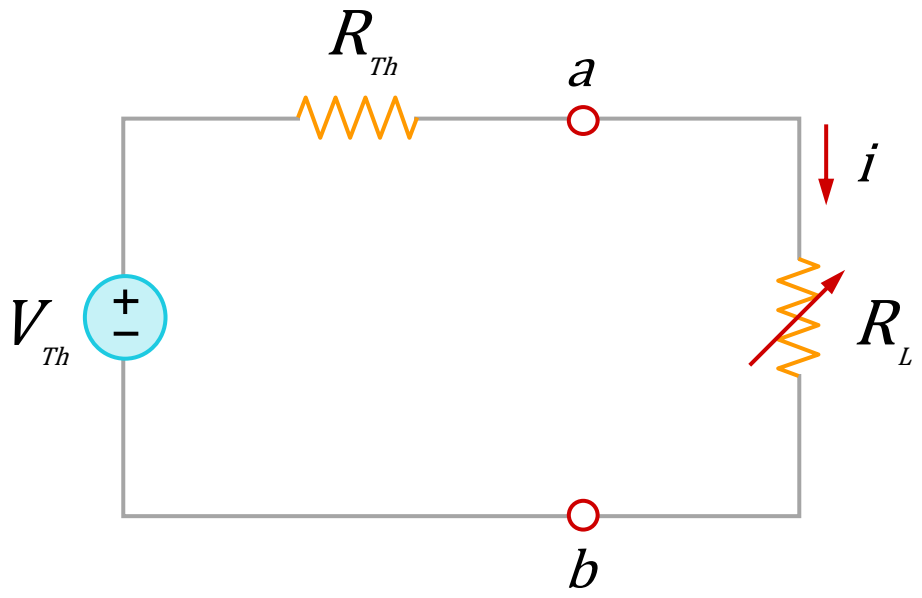

The power delivered to the load is:

$$p = i^2 R_L = \left(\frac{V_{Th}}{R_{Th} + R_L}\right)^2 R_L$$

Maximum Power Transfer

For a given circuit, V_{Th} and R_{Th} are fixed. By varying the load resistance R_L, the power delivered to the load varies as shown.

$$p = i^2 R_L = \left(\frac{V_{Th}}{R_{Th} + R_L}\right)^2 R_L$$

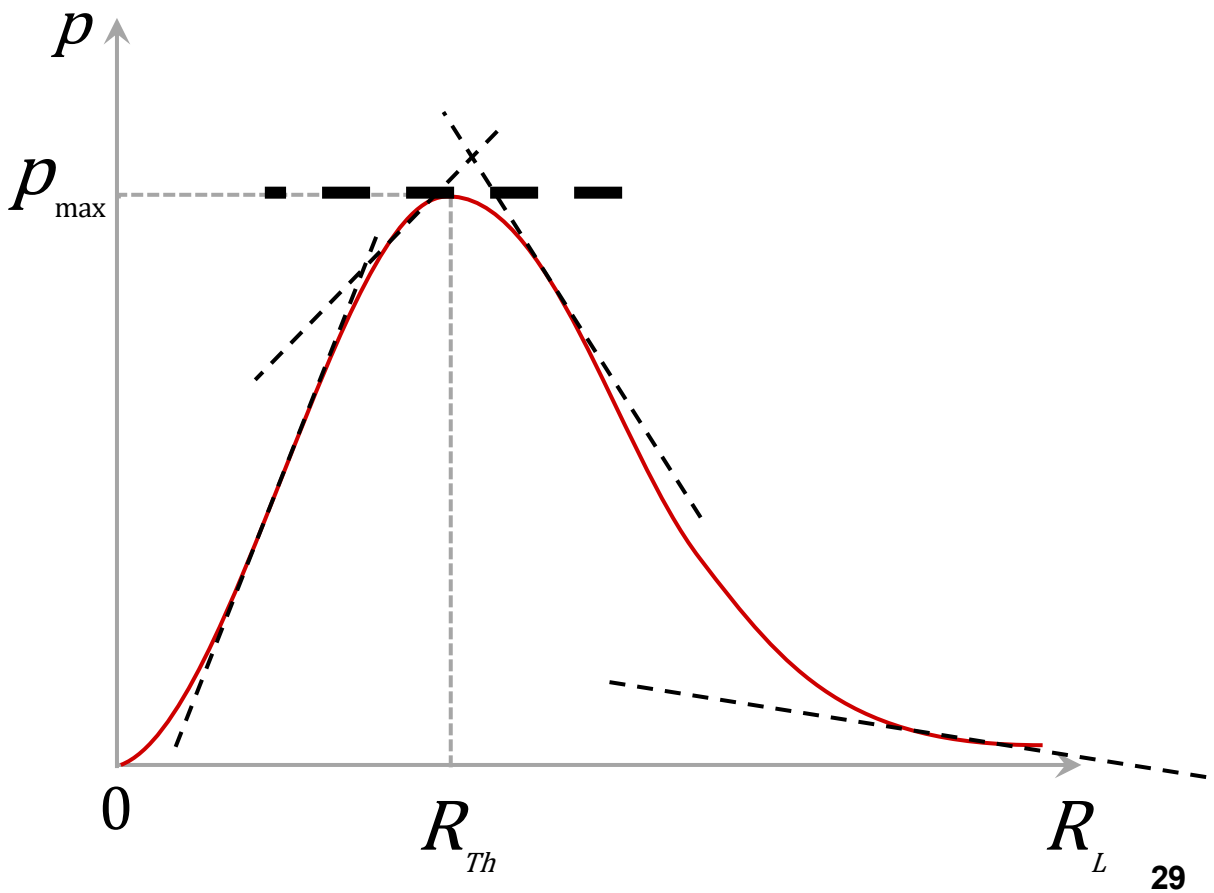

Maximum Power Transfer

Differentiating $p(R_L)$ with respect to R_L and setting it equal to zero gives:

$$p = i^2 R_L = \left(\frac{V_{Th}}{R_{Th} + R_L}\right)^2 R_L$$

$$\frac{dP}{dR_L} = V_{Th}^2 \left[\frac{(R_{Th} + R_L)^2 - 2R_L(R_{Th} + R_L)}{(R_{Th} + R_L)^4}\right]$$

$$= V_{Th}^2 \left[\frac{(R_{Th} + R_L - 2R_L)}{(R_{Th} + R_L)^3}\right] = 0$$

$$(R_{Th} + R_L - 2R_L) = R_{Th} - R_L = 0$$

$$R_L = R_{Th}$$

Maximum Power Transfer

The maximum power transfer happens when $R_L = R_{Th}$:

$$p = i^2 R_L = \left(\frac{V_{Th}}{R_{Th} + R_L}\right)^2 R_L \quad \Rightarrow \quad p_{max} = \frac{V_{Th}^2}{4R_{Th}}$$

*This assumes fixed R_{Th}

School of Electrical and Electronic Engineering
College of Engineering
Prof. Sunwoo Lee
Last Modified: 20260119

Maximum Power Transfer

- Linearity Property → Superposition
- Source Transformation
- Thevenin's Theorem ←→ Norton's Theorem
- Maximum Power Transfer
- **Operational Amplifier (Op-Amp)**

Operational Amplifier – a Real One

Signal amplification is one of the key functions of electronics.

An <u>Operational Amplifier (Op-Amp)</u> is one such example, and is like voltage-controlled voltage source:

In fact, it may look like (TI 741):

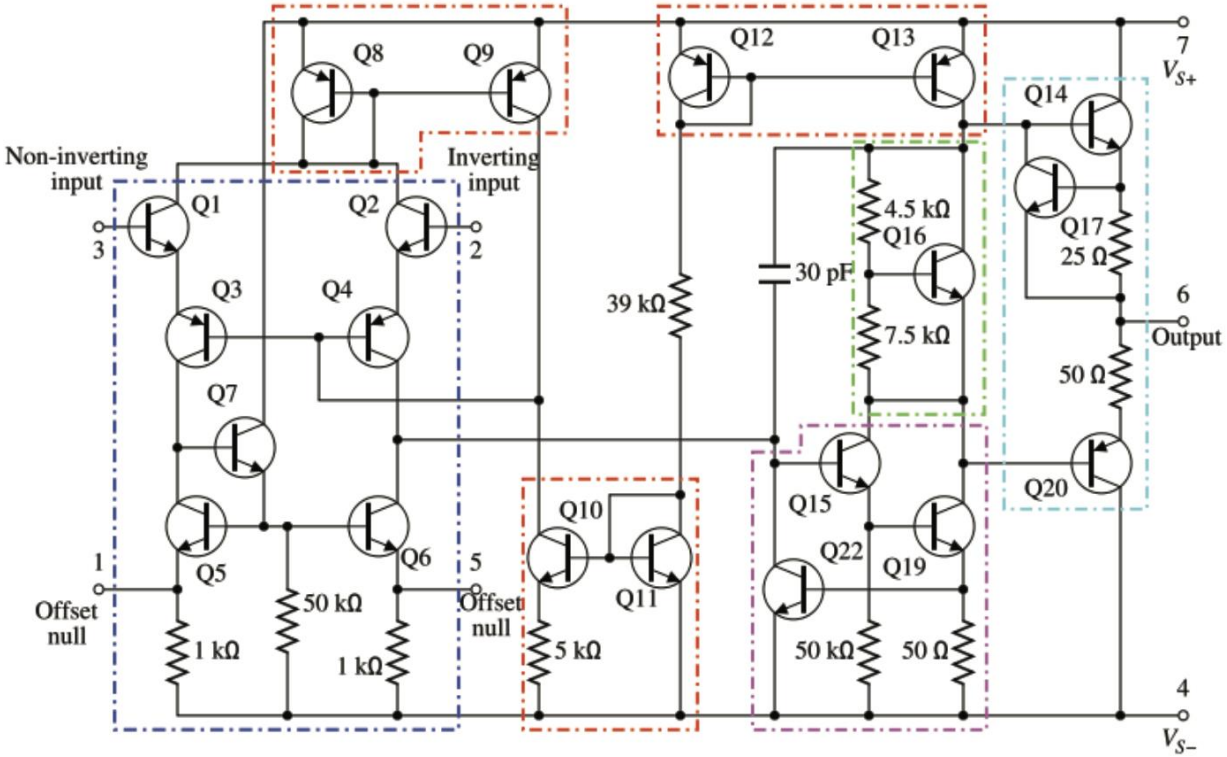

Operational Amplifier – an Ideal One

A real <u>op-amp</u> can be simplified, akin to finding a Thevenin Equivalent circuit:

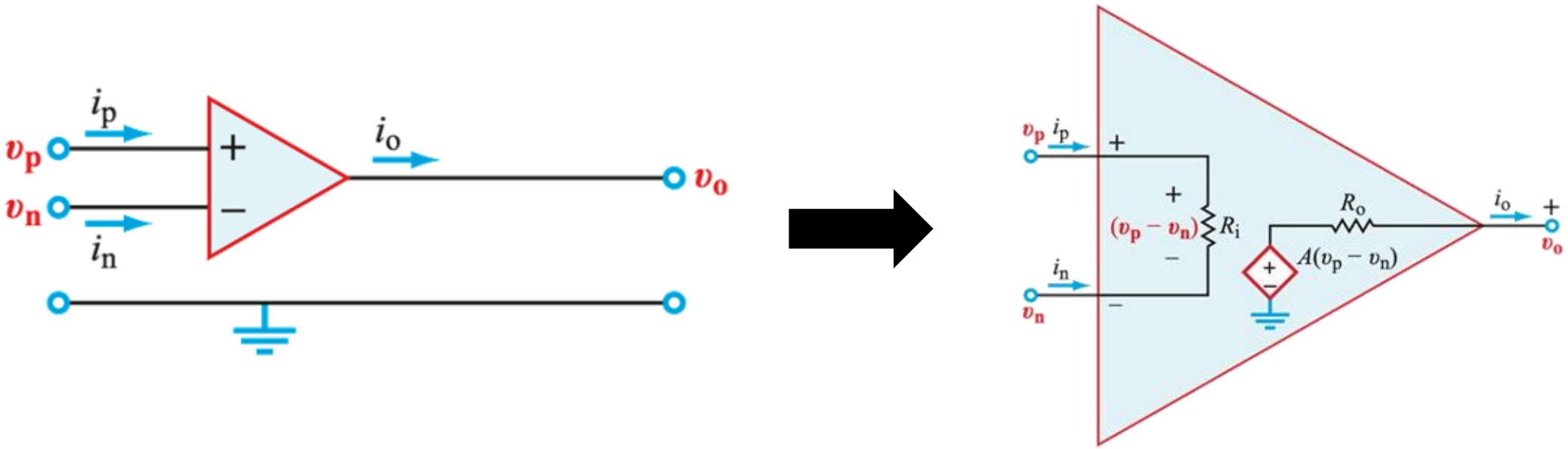

Often, we start studying an idealized case, so-called an ideal op-amp where

$A = \infty$, $R_i = \infty$, and $R_O = 0$ → *think about why*

Then, not to blow up to infinity, it has to be that **$i_p = i_n = 0$ & $v_p = v_n$**

Operational Amplifier – with a Feedback

Usually you will see an op-amp with a feedback (inverting or non-inverting) – but why?

Non-Inverting Configuration

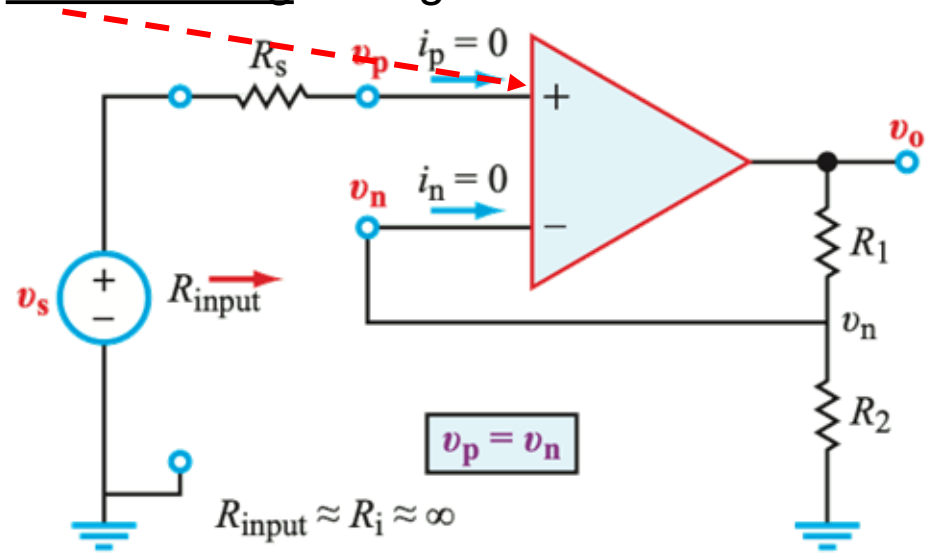

Inverting Configuration

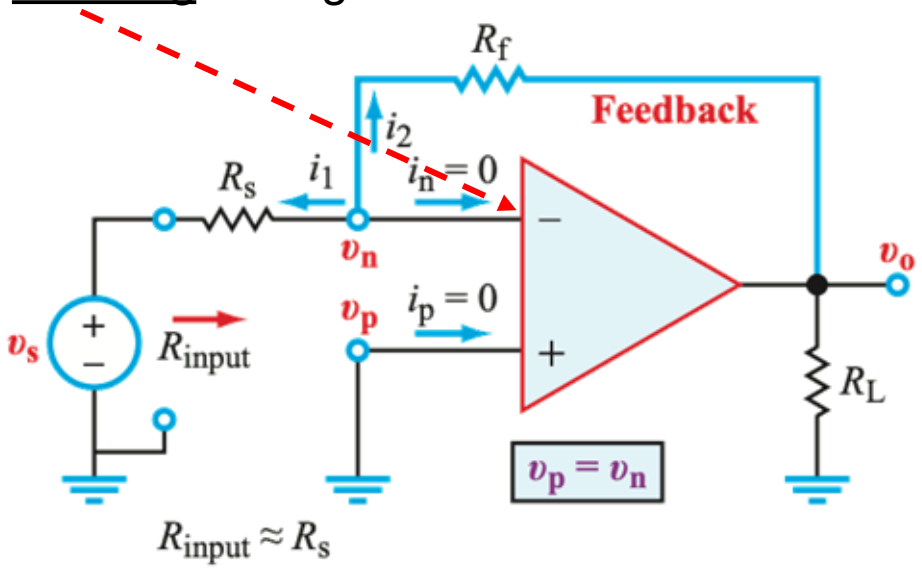

Analyzable using KCL & KVL as usual (more on that in **EE2102: Analog Electronics**)

Why is the feedback always going to the negative terminal?