# EE2101 Circuit Analysis

## The Lecturer 1

School of Electrical and Electronic Engineering
College of Engineering
Prof. Sunwoo Lee
Last Modified: 20260112

Prof. Sunwoo Lee

| | |
|---|---|
| **Present** | **Nanyang Technological University** - Assistant Professor in Electrical and Electronic Engineering |
| **2022** | **Cornell University** - Research Associate & Lecturer in Electrical and Computer Engineering |
| **2016** | **Columbia University** - Ph.D. in Electrical Engineering |
| **2012** | **Columbia University** - M.S. in Electrical Engineering |
| **2010** | **Cornell University** - B.S. in Electrical and Computer Engineering |

Expertise: Nanofabrication, Circuit Design, On-chip Integration, Data Processing, Electrophysiology

---

### Nano-materials Integration

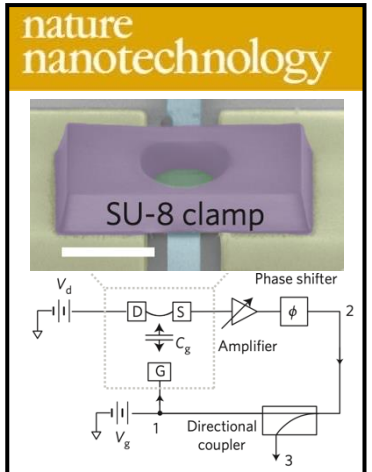


*Nature Nano* (2013)

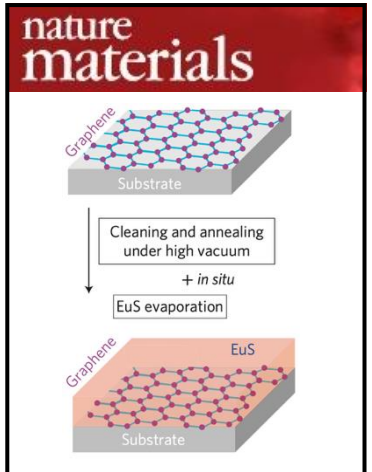


*Nature Materials* (2016)

### Circuits & Heterogenous Integration

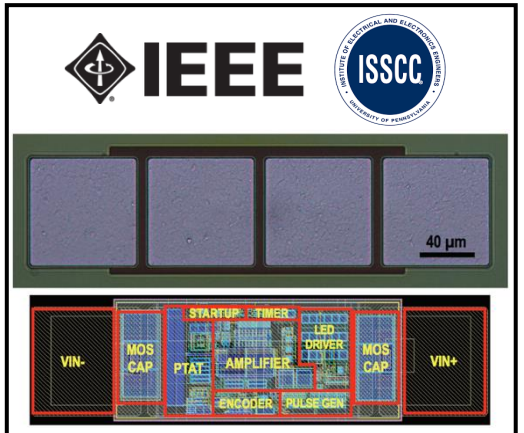


*ISSCC* (2018)

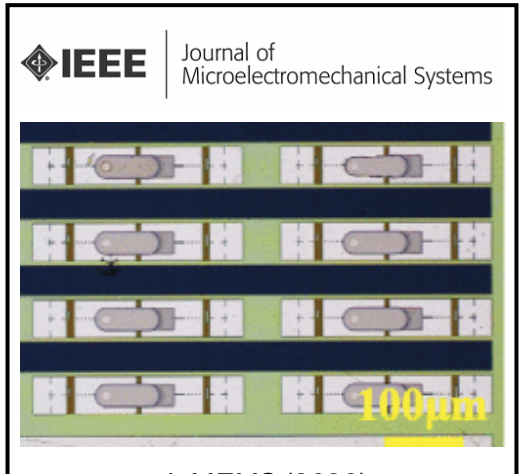


*J. MEMS* (2020)

### Autonomous Microsystems For Biological Big Data

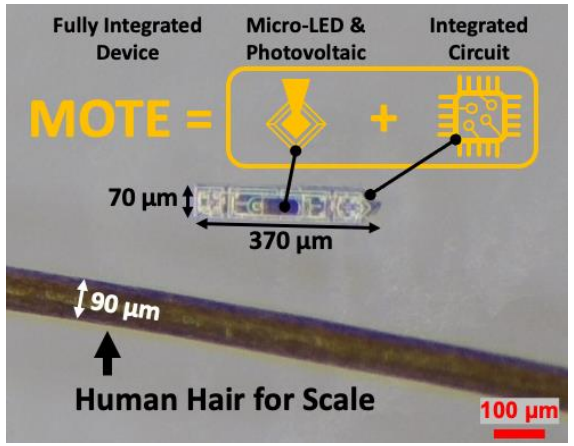

# EE2101 Circuit Analysis

## “Bio”-electronics Research Example

School of Electrical and Electronic Engineering
College of Engineering
Prof. Sunwoo Lee
Last Modified: 20260112

nature electronics

View all journals | Search | Log in

Explore content | About the journal | Publish with us | Sign up for alerts | RSS feed

nature > nature electronics > volumes > volume 8 > issue 12

## Volume 8 Issue 12, December 2025

← Previous issue | Volume 8

Subscribe

### Tetherless neural recording scales down

An optoelectronic microsystem that uses a single AlGaAs diode for both photovoltaic power and data transfer, eliminating the need for wires or other tethers, can provide chronic neural recording in awake mice. The optical microscopy image on the cover shows the neural implant, which has a subnanolitre volume, in a glass micropipette, which is surrounded by grains of salt and near the tip of a pencil.

See Lee et al.

Image: Yumin Zheng and Sunwoo Lee. Cover design: Lauren Heslop.

### Table of Contents

Editorial
Comment & Opinion
Research Highlights
News & Views
Reviews
Research
Reverse Engineering
Amendments & Corrections

Prof. Sunwoo Lee
Last Modified: 20260112

# HOUSEKEEPING

- *I will do Weeks 1-7; Dr. Yamin Yan will do the rest (Weeks 8-13).*
- *I will write both quizzes (2) and assignments (2) and half the final exam.*
- *Lab will not start till Week 5 – the schedule is soon to be finalized *(you may not have been assigned yet)*

*1. Knowledge Map (ft. Azmaeen Nibras): https://miro.com/app/board/uXjVIoU3czI=/*

*2. GPT-based Chatbot: https://nala.ntu.edu.sg/ee2101/*

*3. Open-source Textbook: https://www.fulcrum.org/ee?locale=en*

*4. Syllabus*

*5. Weekly Assignment*

*6. NTULearn-based Quiz*

# EE2101 Circuit Analysis

Lecture 1

School of Electrical and Electronic Engineering
College of Engineering
Prof. Sunwoo Lee
Last Modified: 20260112

**HOUSEKEEPING – 1.** *Knowledge Map (ft. Azmaeen Nibras):* https://miro.com/app/board/uXjVIoU3czI=/

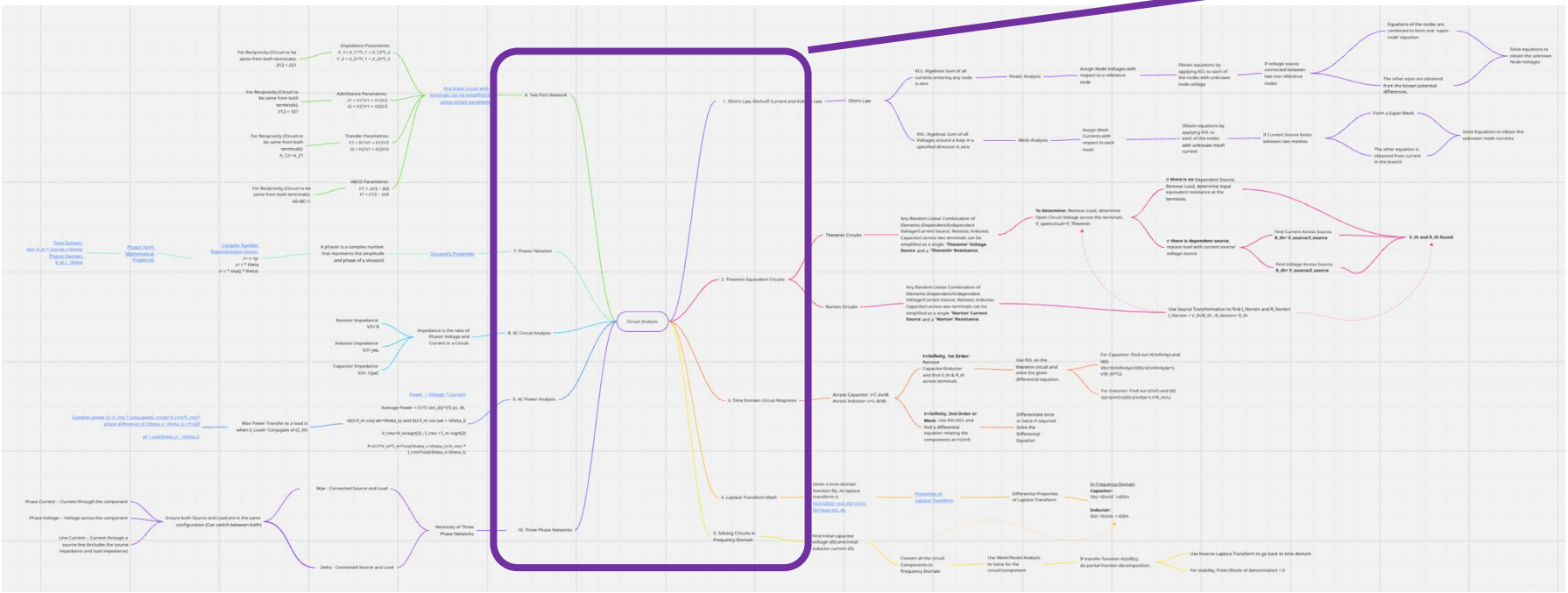

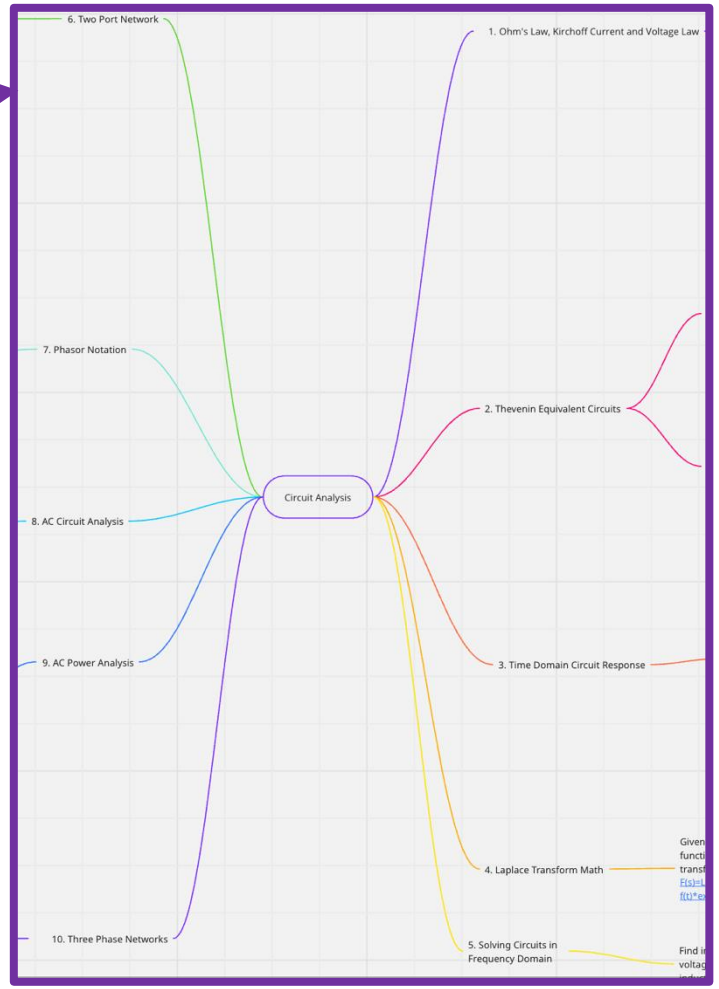

## HOUSEKEEPING – 2. *GPT-based Chatbot: https://nala.ntu.edu.sg/ee2101/*

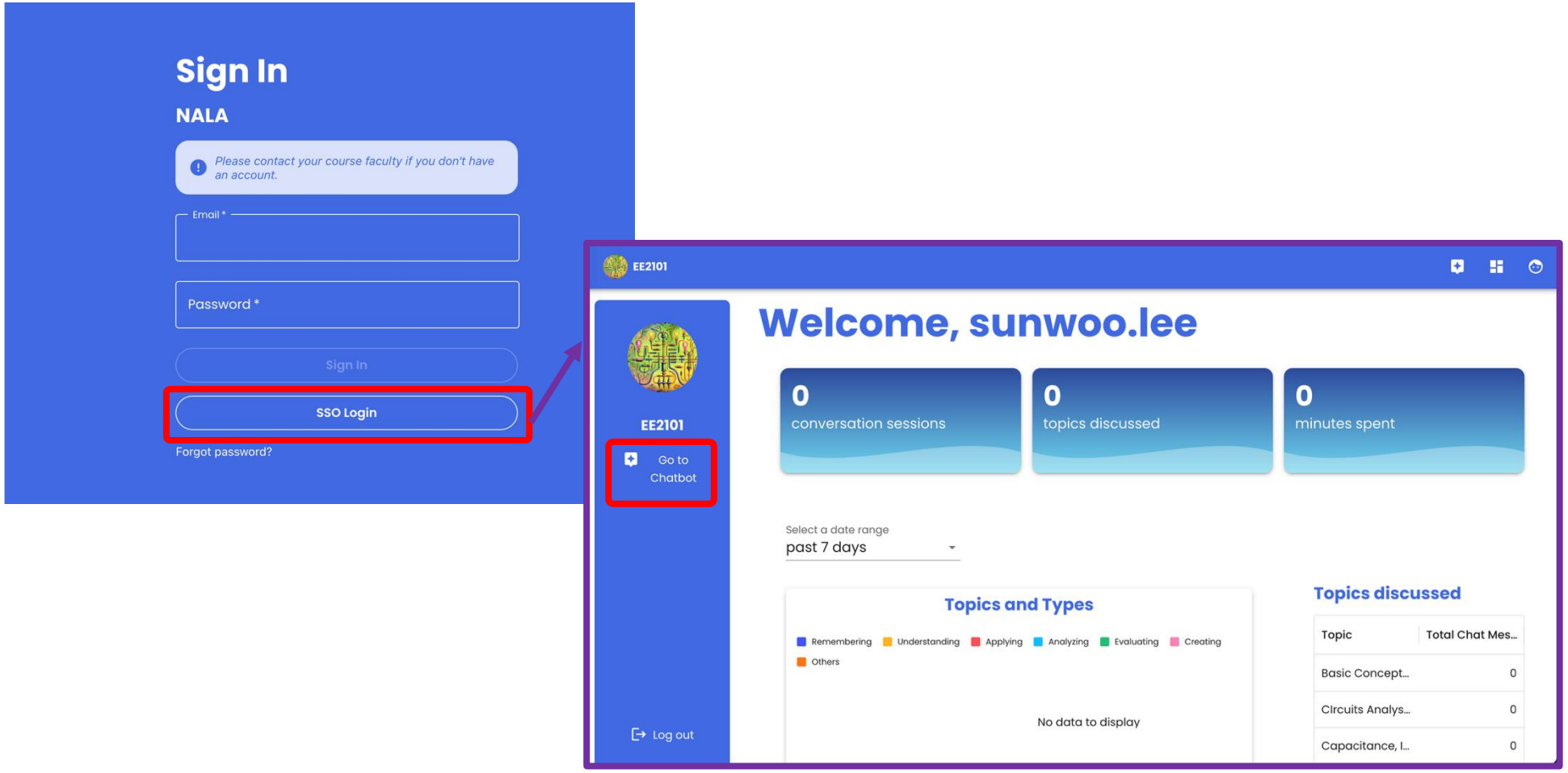

## HOUSEKEEPING – 3. *Open-source Textbook: https://www.fulcrum.org/ee?locale=en*

Your use of this Platform is subject to the Fulcrum Terms of Service.

OK

### Search and Browse Books

1 - 10 of 10

Sort by Publication Date (Newest First) | 15 per page

**Access**

- All content
- Only content I can access
- Only open access content

**Author**

**Source**

**Legend**

FREE Free resource

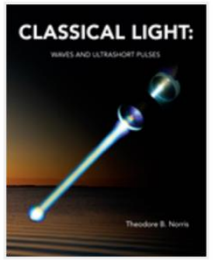


Classical Light: Waves and Ultrashort Pulses
Theodore B. Norris
2025

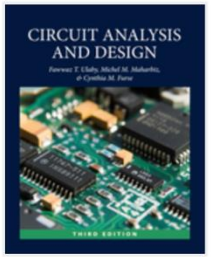


Circuit Analysis and Design
Fawwaz T. Ulaby, Michel M. Maharbiz and Cynthia M. Furse
2025

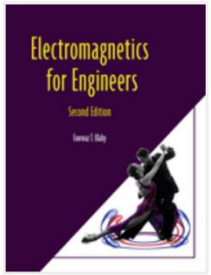


Electromagnetics for Engineers
Fawwaz T. Ulaby
2025

## **HOUSEKEEPING – 4.** Syllabus (on NTULearn)

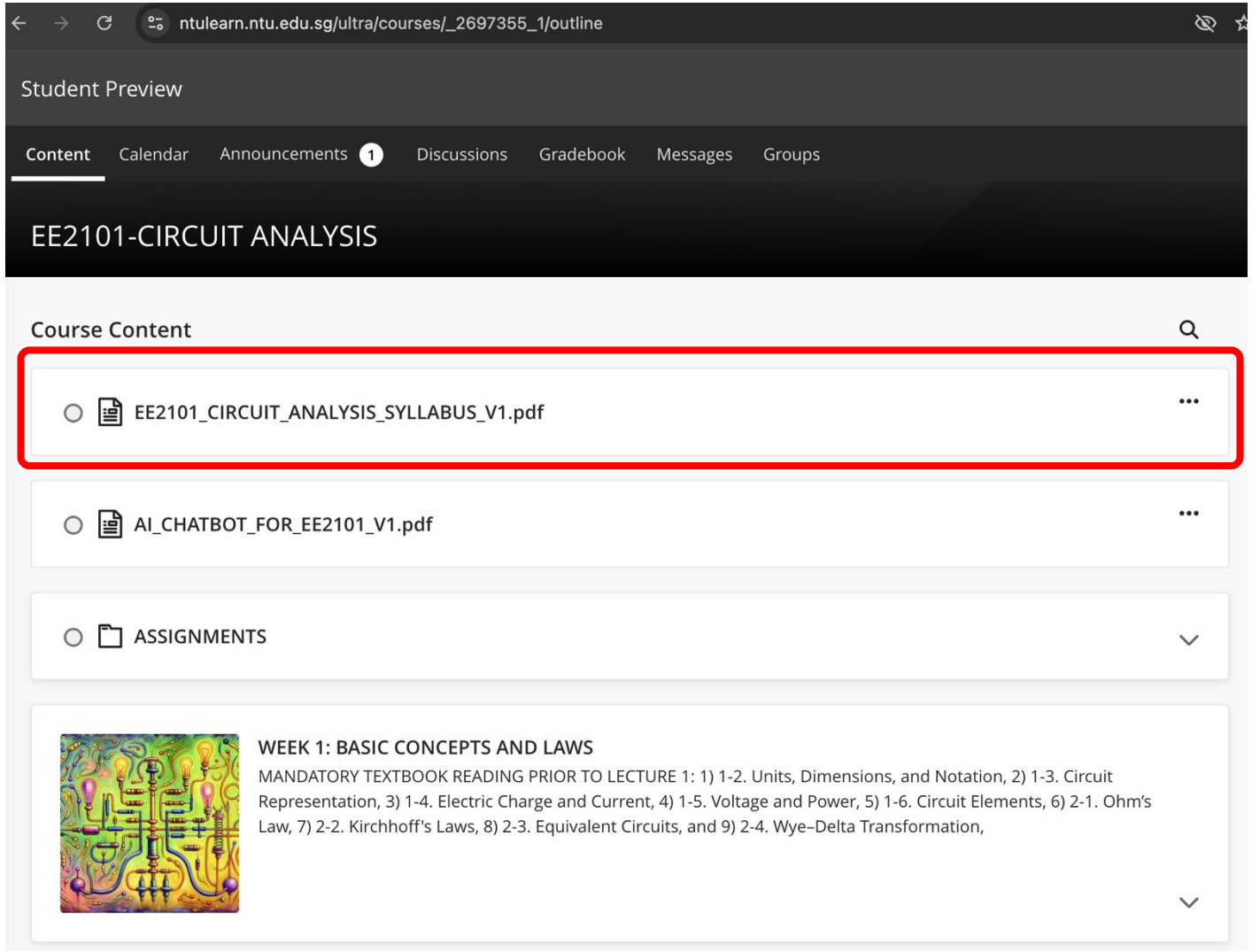

Prof. Sunwoo Lee
Last Modified: 20260112

## HOUSEKEEPING – 5. Weekly Assignments

Content | Calendar | Announcements 1 | Discussions | Gradebook | Messages | Groups

### Course Content

- EE2101_CIRCUIT_ANALYSIS_SYLLABUS_V1.pdf
- AI_CHATBOT_FOR_EE2101_V1.pdf
- ASSIGNMENTS
  - ASSIGNMENT 1
    - ASSIGNMENT 1 - NO LATE SUBMISSION ALLOWED
      Due date: 1/19/26, 12:30 PM (UTC+8)
      Submit as a pdf attachment (make it "viewable AND downloadable") *Formatting/neatness counts --> points will be taken off if poorly formatted, hard to read, etc.
  - ASSIGNMENT 2

EE2101-CIRCUIT ANALYSIS

### ASSIGNMENT 1 - NO LATE SUBMISSION ALLOWED

**Description**

Submit as a pdf attachment (make it "viewable AND downloadable") *Formatting/neatness counts --> points will be taken off if poorly formatted, hard to read, etc.

**Details**

**Assessment due date:** 1/19/26, 12:30 PM

New attempts will not be allowed after the due date.
Submissions will not be accepted after the due date.

**Marks/Attempts**

**Maximum points** 100 points
Mark is based on the last attempt with a mark.

**Attempts:** Unlimited

Start attempt 1

## HOUSEKEEPING – 6. *NTULearn-based Quiz*

Content | Calendar | Announcements 1 | Discussions | Gradebook | Messages | Groups

Course Content

- EE2101_CIRCUIT_ANALYSIS_SYLLABUS_V1.pdf
- AI_CHATBOT_FOR_EE2101_V1.pdf
- ASSIGNMENTS
- QUIZZES
  - NTULearn Quiz Setup Instruction
  - PRACTICE QUIZ #1 (Requires Respondus LockDown Browser)
    No due date | Time limit: 1 minute | Proctored
    A mock quiz to test your system with the lockdown broswer. The access code is 111497

EE2101-CIRCUIT ANALYSIS

PRACTICE QUIZ #1 (Requires Respondus LockDown Browser)

**Description**

A mock quiz to test your system with the lockdown broswer. The access code is 111497

**Details**

Assessment due date: No due date

Time limit: 1 minute | Automatic submission

**Additional information**

Additional Information
After you submit an attempt, refresh the Details & Information panel to view updates

**Assessment security**

Assessment security
Respondus LockDown Browser You need Respondus LockDown Browser to complete this assessment
Download Respondus LockDown Browser—if not already installed

**Marks/Attempts**

Maximum points 100 points
Mark is based on the last attempt with a mark.

Attempts: Unlimited

Access code required: Type 6-digit code

Start attempt 1

# EE2101 Circuit Analysis

Lecture 1

School of Electrical and Electronic Engineering
College of Engineering
Prof. Sunwoo Lee
Last Modified: 20260112

## How to study for this course

*Textbook → Lecture → Examples → Tutorials*

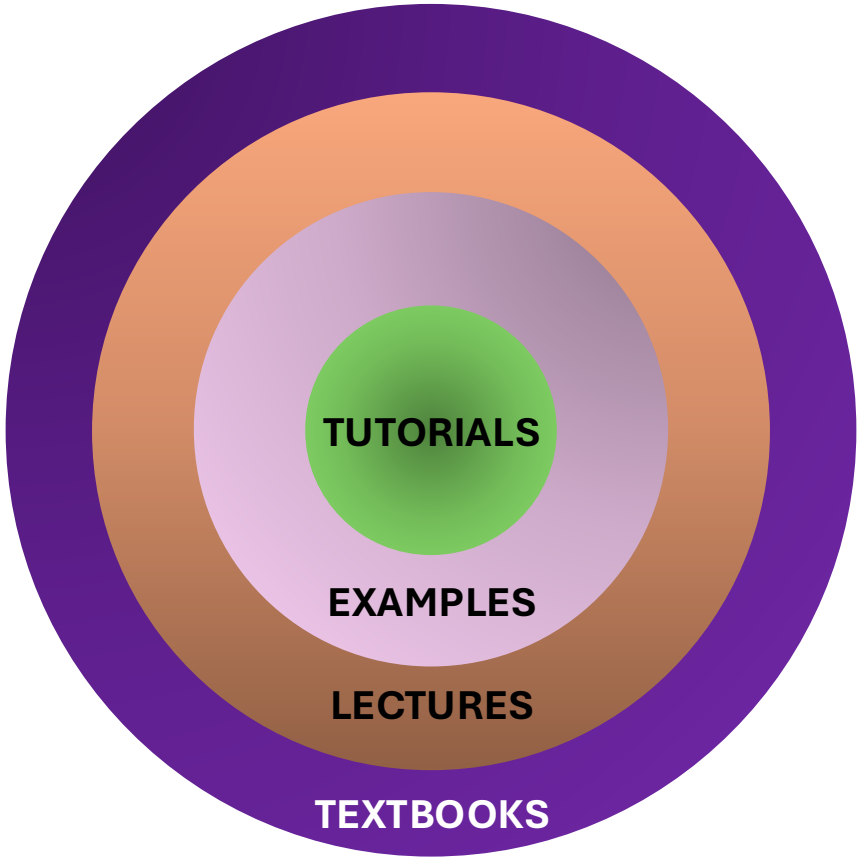

School of Electrical and Electronic Engineering
College of Engineering
Prof. Sunwoo Lee
Last Modified: 20260112

## HOUSEKEEPING

# Q&A

# INTRODUCTION

## What does a modern electronics look like?

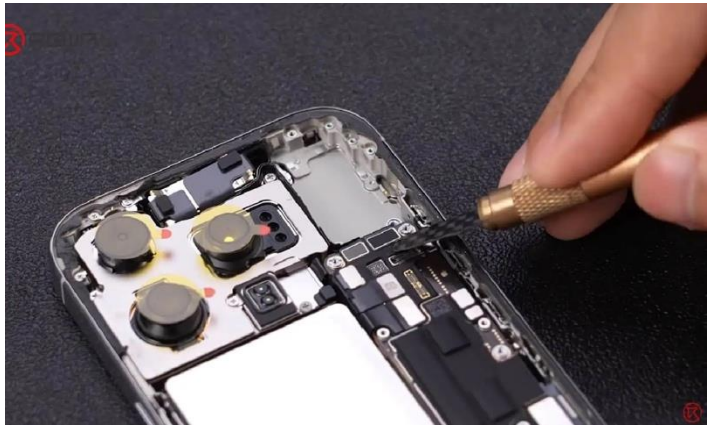

*iPhone 16 (https://www.androidheadlines.com/2024/09/first-iphone-16-pro-teardown-shows-a-compact-motherboard-more.html)*

https://www.youtube.com/watch?v=_Qt5YDKJV6g&t=713s&ab_channel=DisassemblingParts

## You will always find a board that looks like

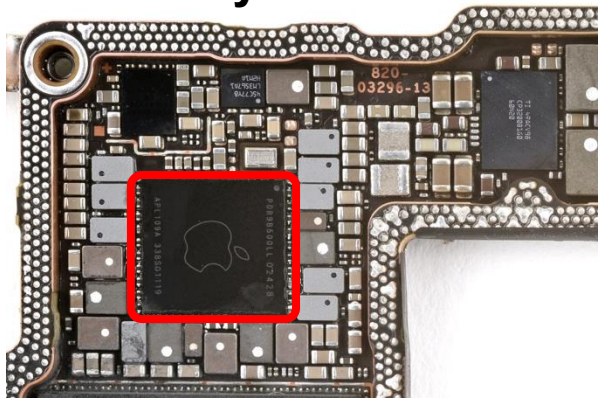

https://www.ifixit.com/Guide/iPhone+16+Chip+ID/177222

25~30 billion transistors in iPhone 17 Pro Max
(*vs.* 2024 world population ~ 8 billions)

140~160 billion transistors in MacBook Pro with M4 Max
(*vs.* the number of neurons in your brain ~ 100 billions)

## INTRODUCTION

**How can you shove so many things into a tiny object? → More on *EE2103 Semiconductor Physics***

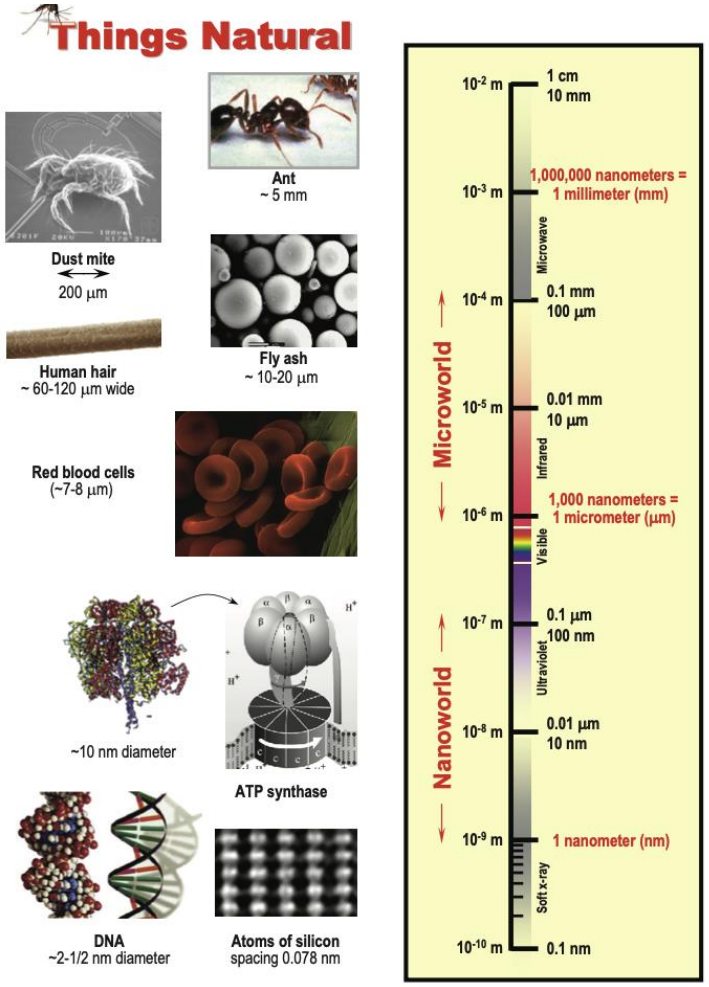


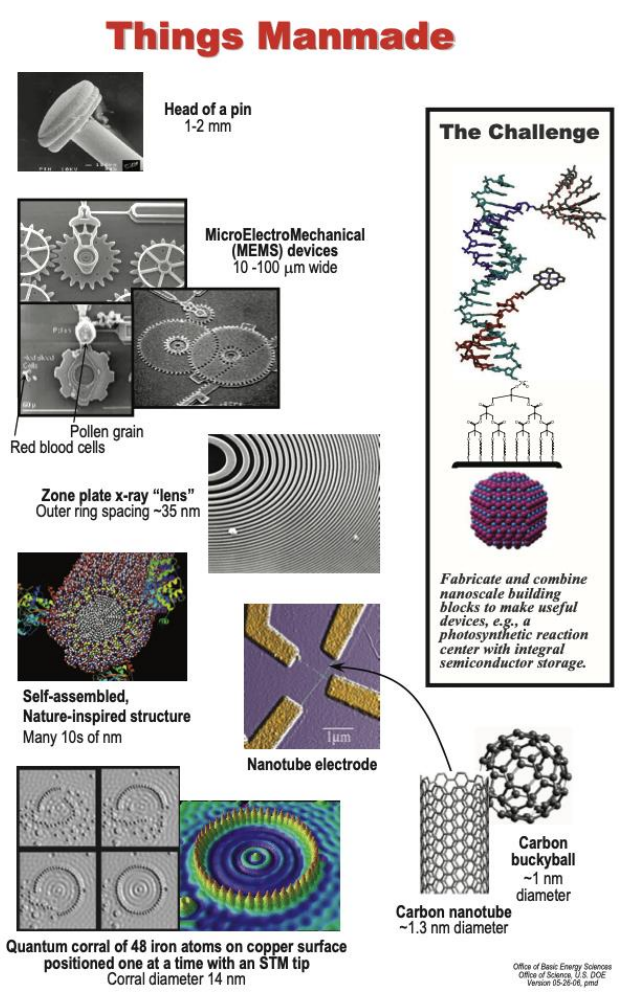


US Department of Energy

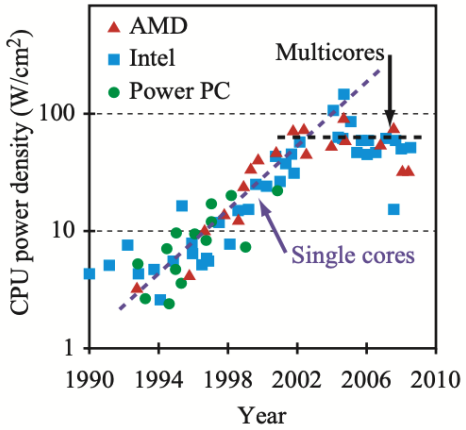


| | Light Bulb | Integrated Circuit |
|---|---|---|
| **Power dissipation** | 100 W | 50 W |
| **Surface area** | 106 $cm^2$ (bulb surface area) | 1.5 $cm^2$ (die area) |
| **Heat flux** | 0.9 $W/cm^2$ | 33.3 $W/cm^2$ |

Circuit Analysis and Design (2025)

# INTRODUCTION

## What we see today is not that surprising:

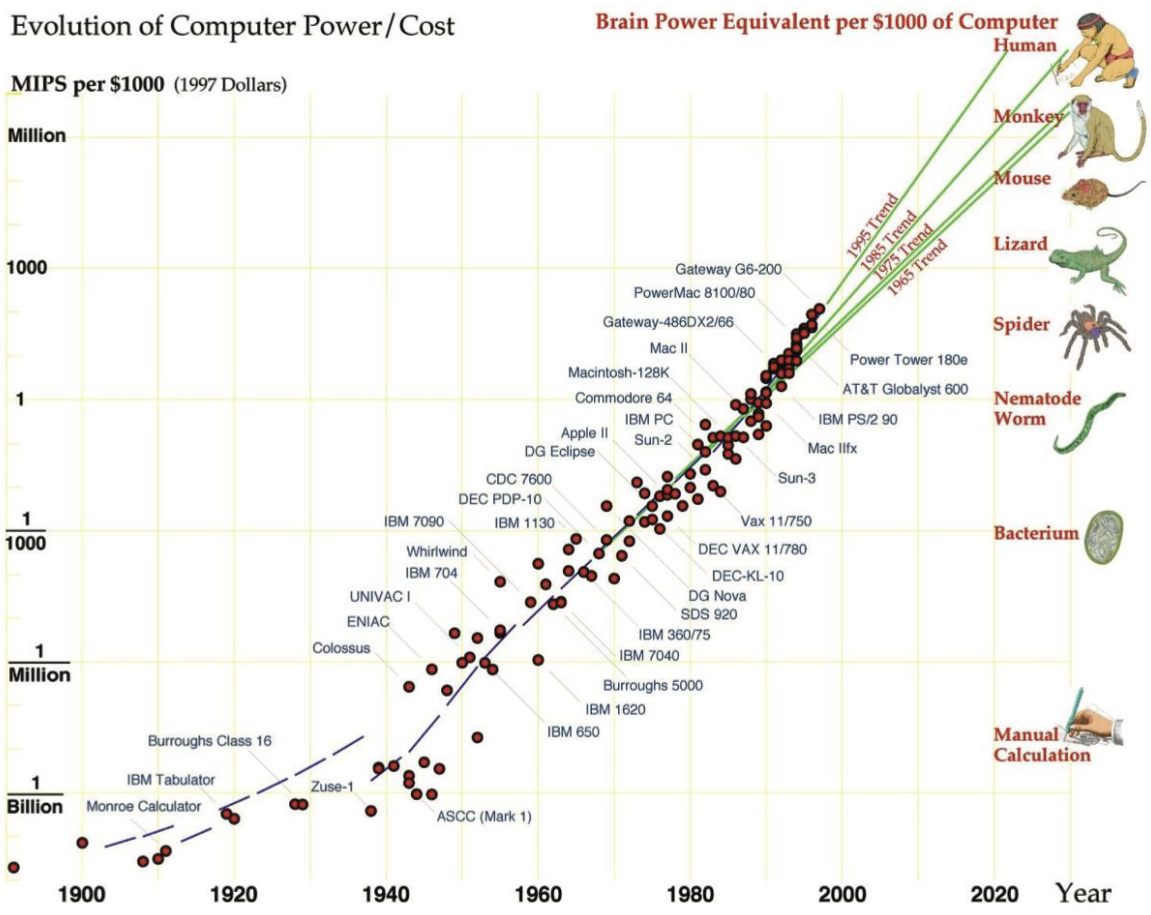


"When will computer hardware match the human brain?" by Hans Moravec, *Journal of Transhumanism*, Vol. 1, 1998.

# EE2101 Circuit Analysis

Lecture 1

School of Electrical and Electronic Engineering
College of Engineering
Prof. Sunwoo Lee
Last Modified: 20260112

## INTRODUCTION

### What does it do anyways?

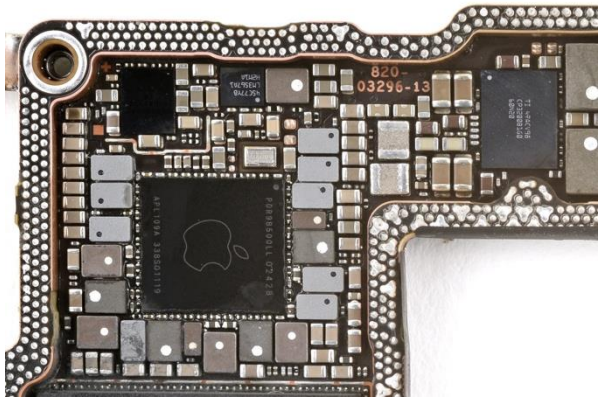

https://www.ifixit.com/Guide/iPhone+16+Chip+ID/177222

### Block Diagram

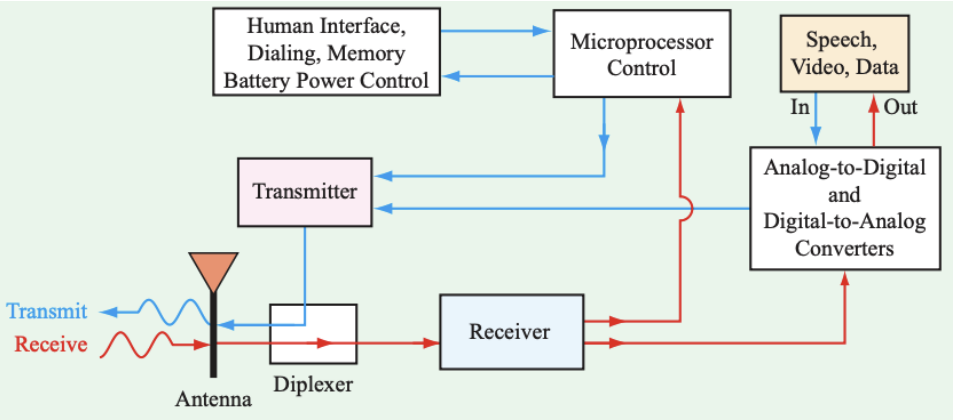


### Printed Circuit Board (PCB)

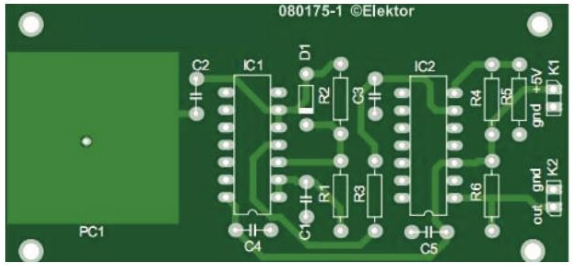


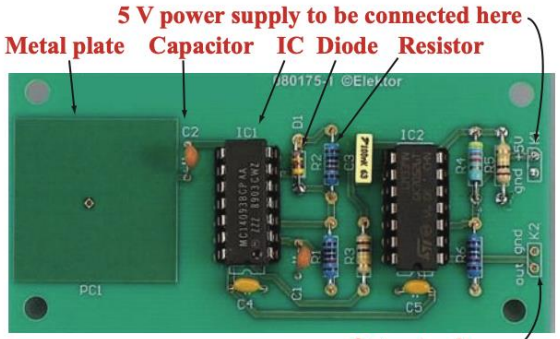

## INTRODUCTION

### Block Diagram

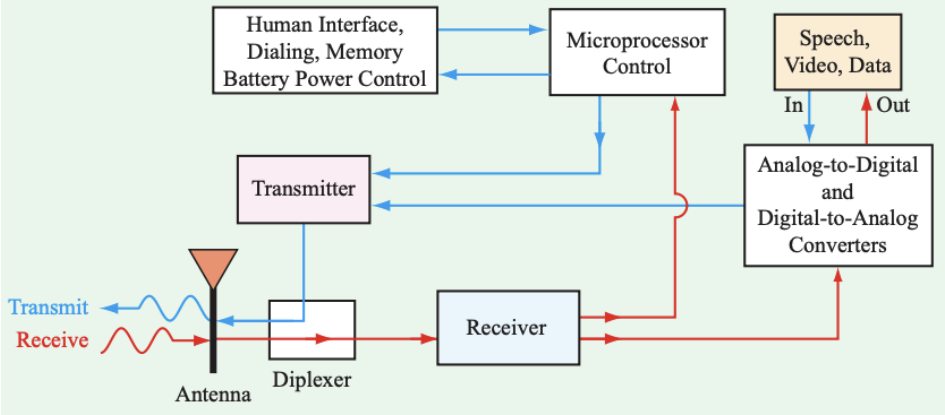


### Circuit Diagram (Schematic)

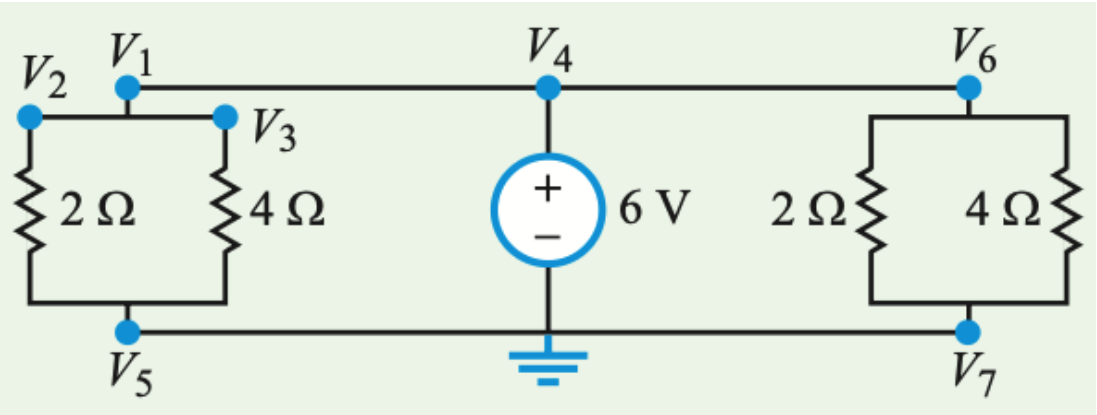


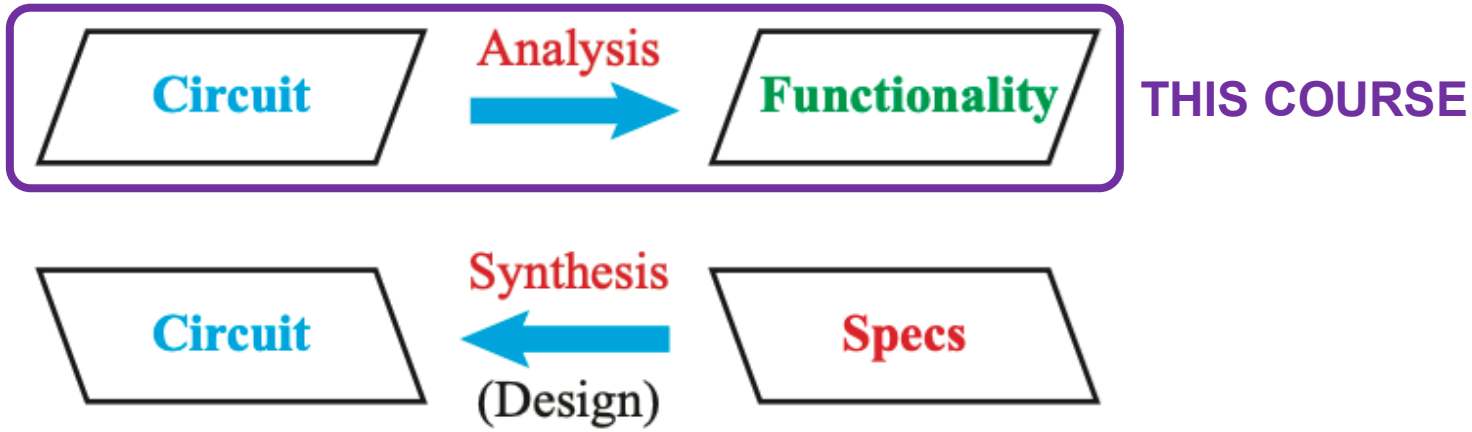

# REVIEW: UNITS

| Dimension | Unit | Symbol |
|---|---|---|
| **Fundamental:** | | |
| Length | meter | m |
| Mass | kilogram | kg |
| Time | second | s |
| Electric charge | coulomb | C |
| Temperature | kelvin | K |
| Amount of substance | mole | mol |
| Luminous intensity | candela | cd |
| **Electrical:** | | |
| Current | ampere | A |
| Voltage | volt | V |
| Resistance | ohm | Ω |
| Capacitance | farad | F |
| Inductance | henry | H |
| Power | watt | W |
| Frequency | hertz | Hz |

| Prefix | Symbol | Magnitude |
|---|---|---|
| exa | E | $10^{18}$ |
| peta | P | $10^{15}$ |
| tera | T | $10^{12}$ |
| giga | G | $10^{9}$ |
| mega | M | $10^{6}$ |
| kilo | k | $10^{3}$ |
| milli | m | $10^{-3}$ |
| micro | $\mu$ | $10^{-6}$ |
| nano | n | $10^{-9}$ |
| pico | p | $10^{-12}$ |
| femto | f | $10^{-15}$ |
| atto | a | $10^{-18}$ |

$$i(t) = \frac{dq}{dt}$$

# CONVENTIONS & DEFINITIONS

$i(t)$ time-varying (ac)

$I$ constant (dc)

$i$ may or may not be time-varying

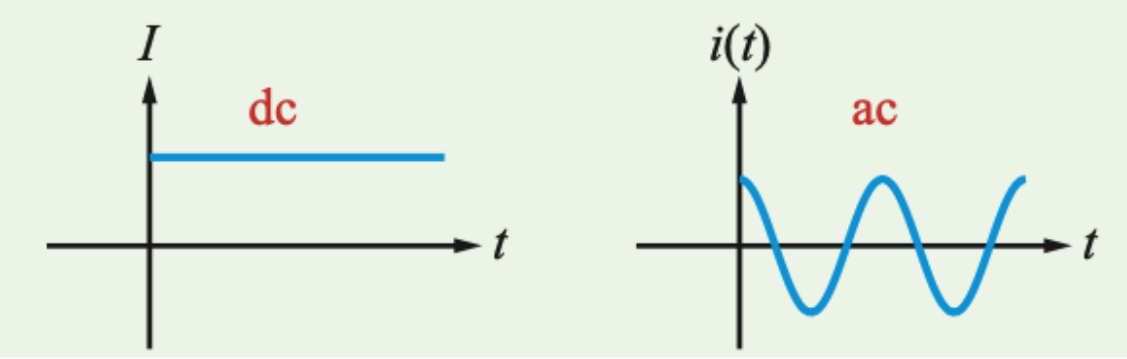


**Later in the course:**

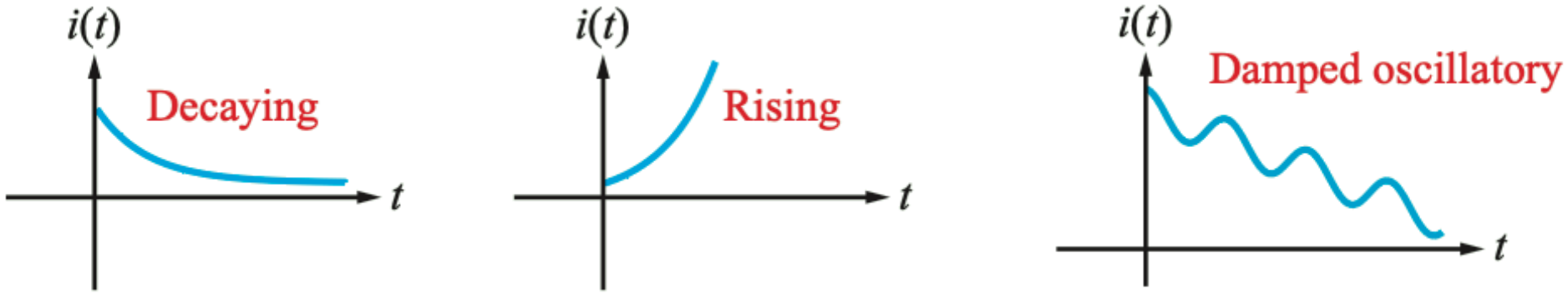

# CONVENTIONS & DEFINITIONS

## Keep an eye on the sign

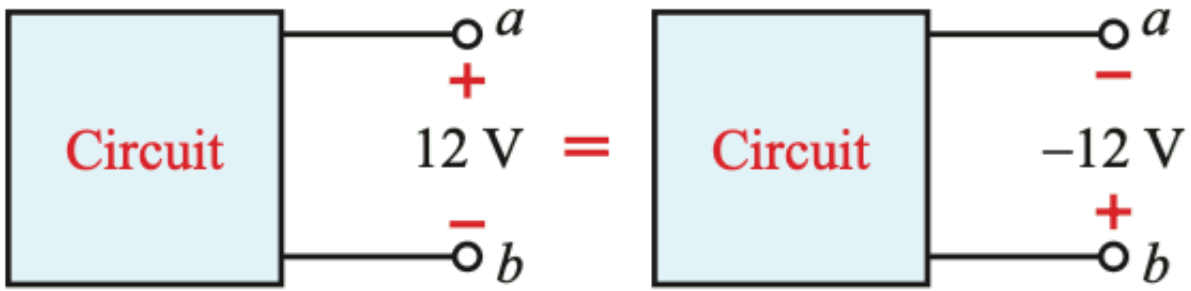


## Node & Branches

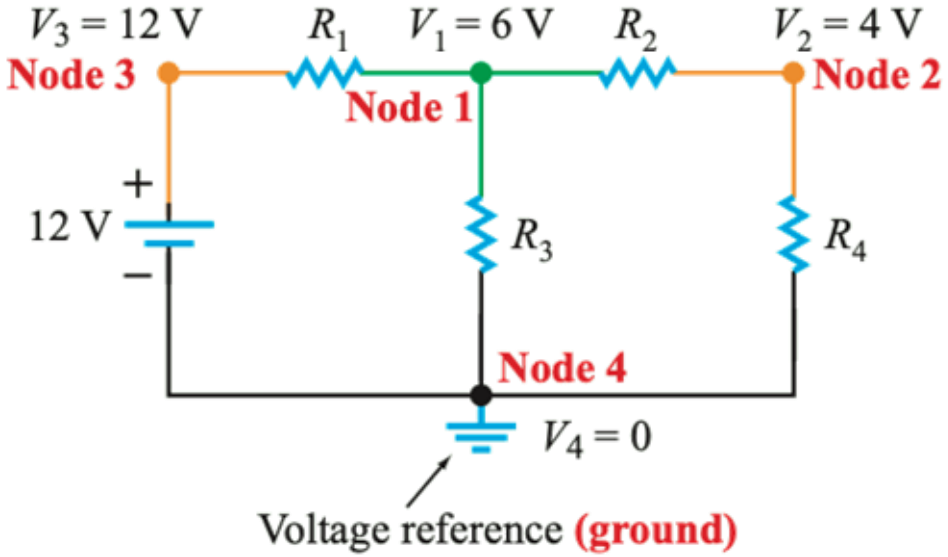


## In practice, you will use:

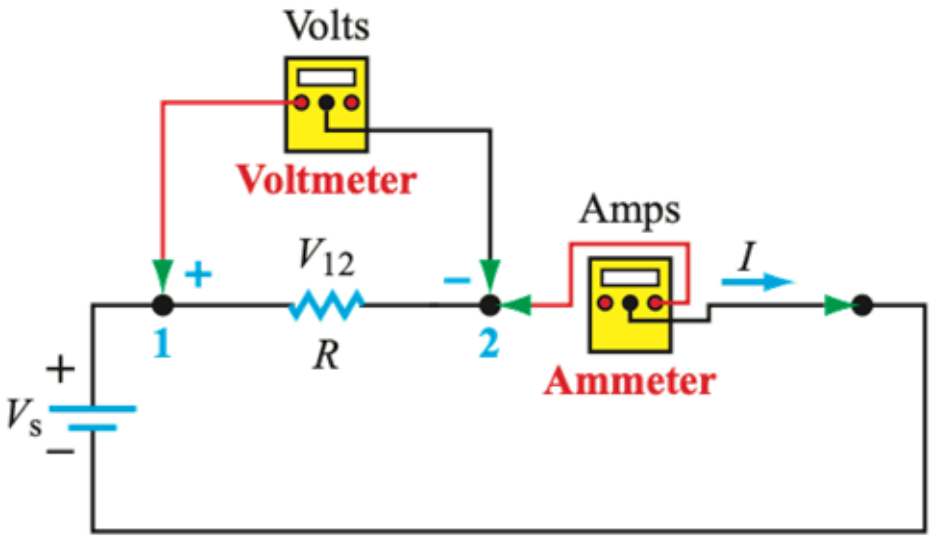

# CONVENTIONS & DEFINITIONS

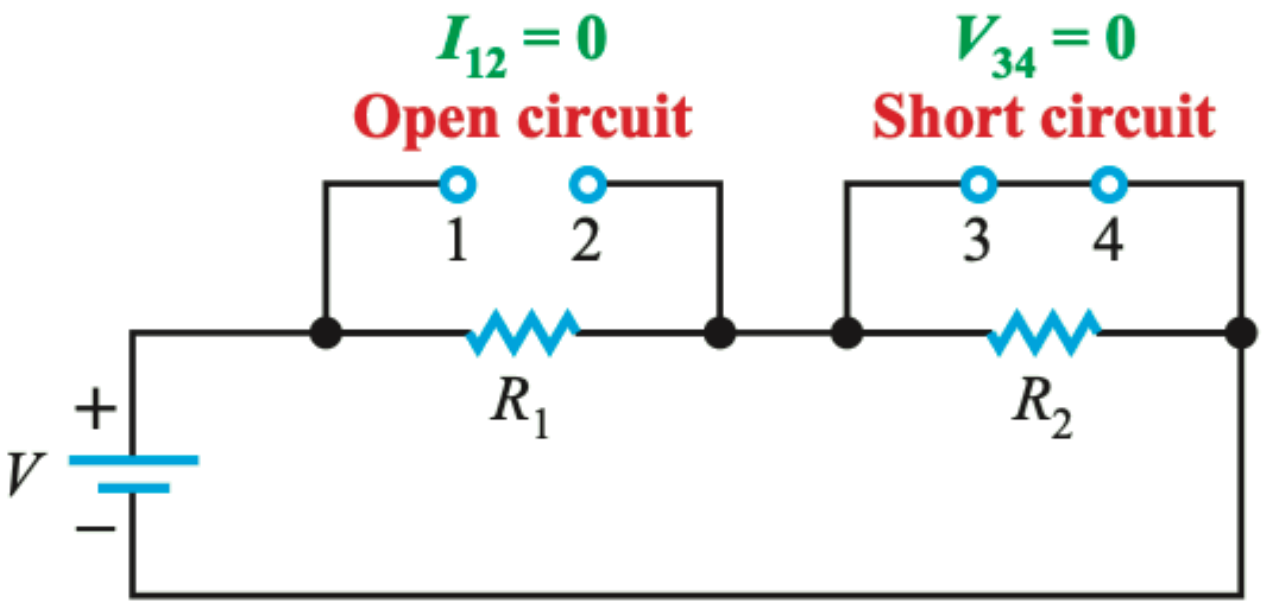


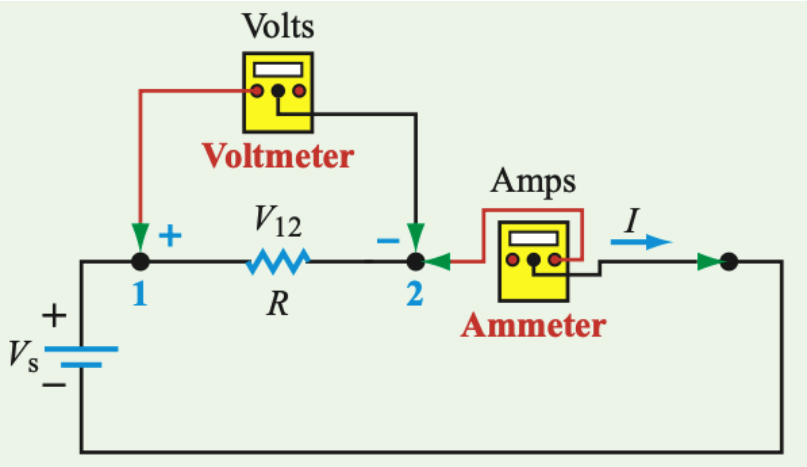

# CONVENTIONS & DEFINITIONS

$$\boldsymbol{Power\ (P) = Voltage\ (V)\ \times\ Current\ (I)}$$

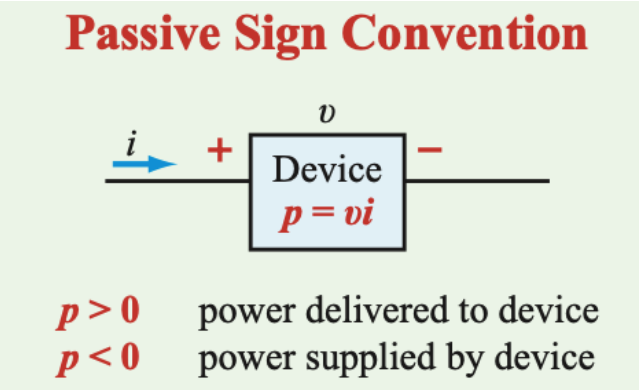


Ex 1)

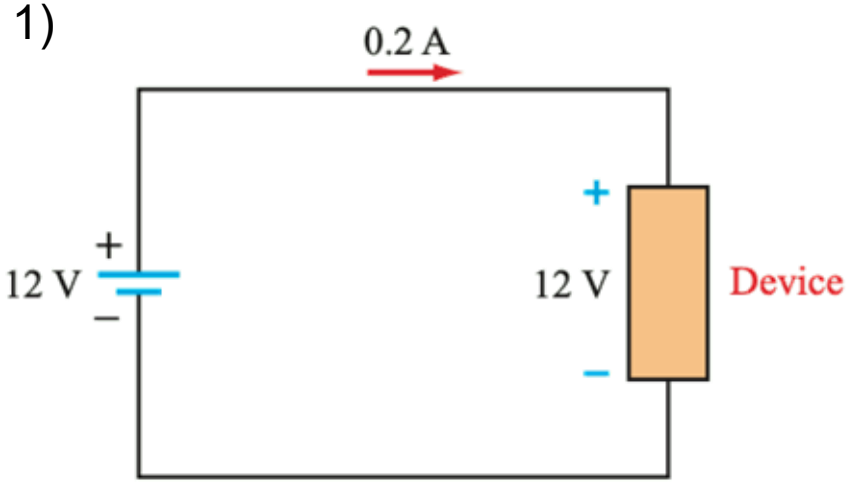


Ex 2)

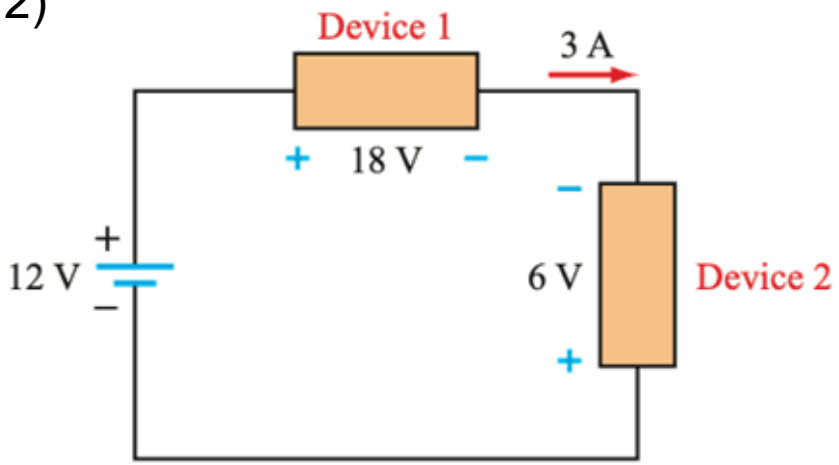

## SOURCES vs. RESISTOR

### Independent Sources

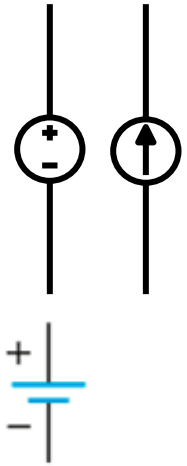

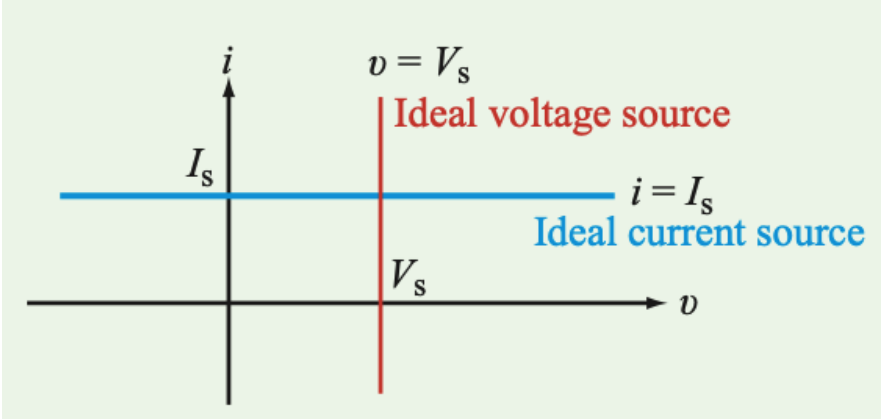

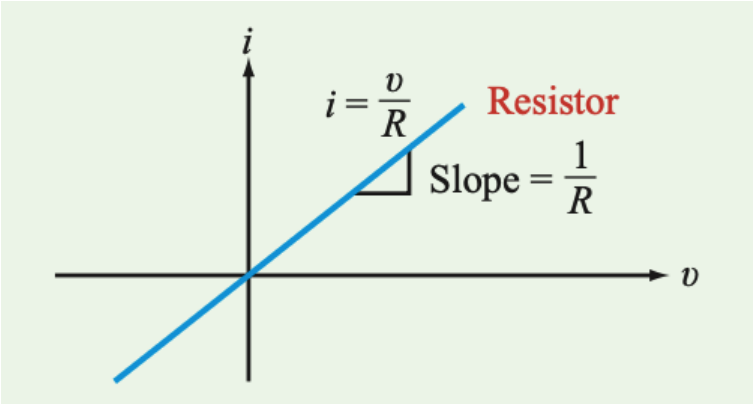


### Controlled Sources

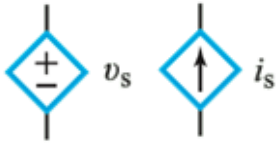


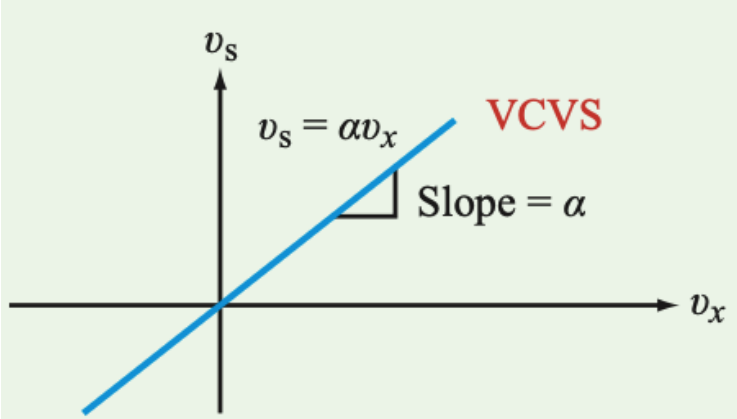


Ex)

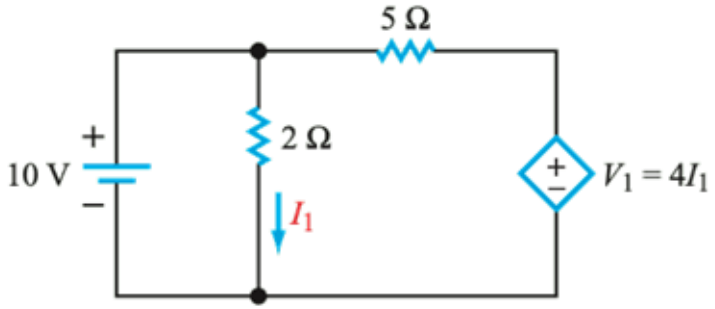

## SOURCES vs. RESISTOR

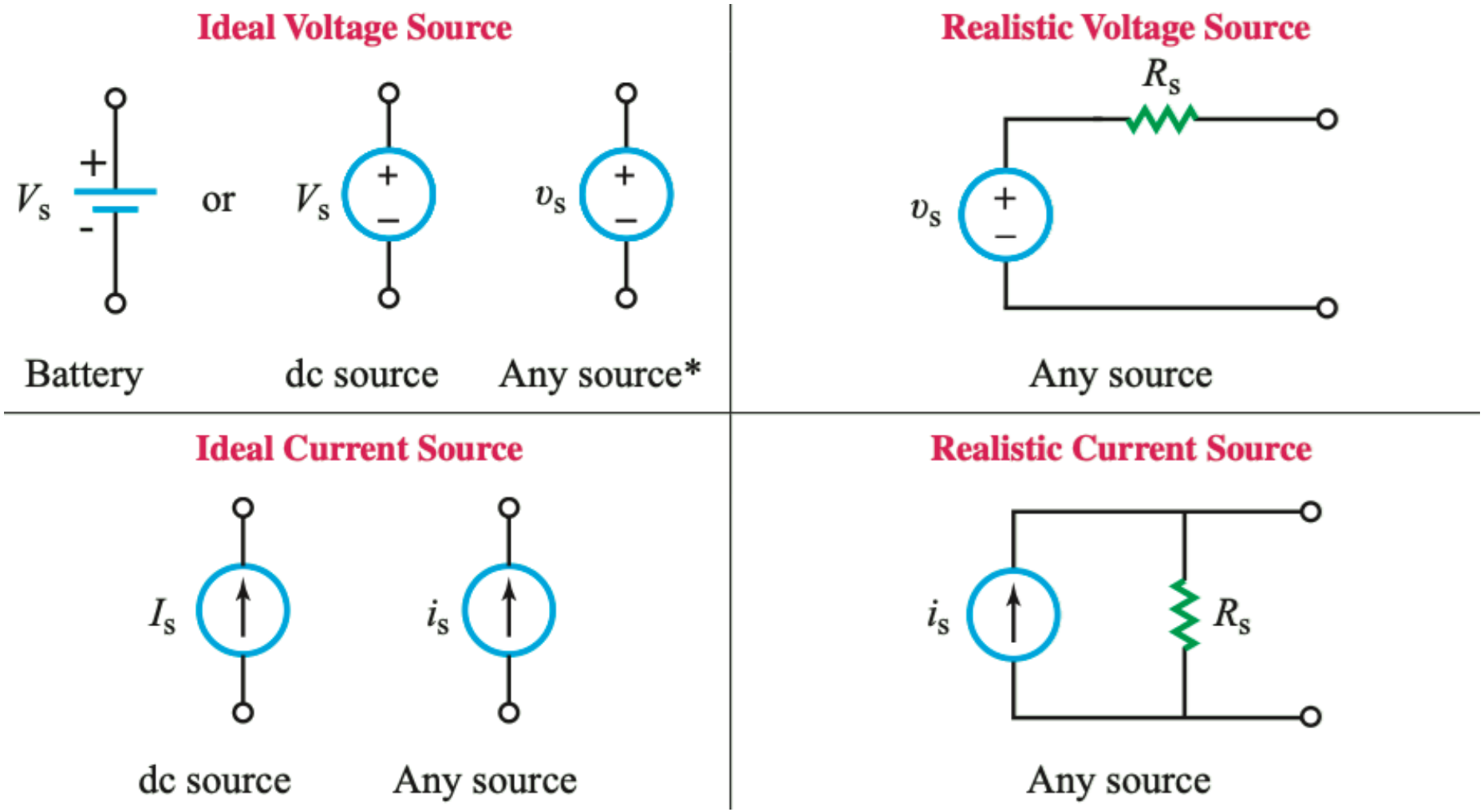

School of Electrical and Electronic Engineering
College of Engineering
Prof. Sunwoo Lee
Last Modified: 20260112

# Ohm's Law

George Simon Ohm (1787-1854)

$$v = iR$$

$$v_{ab} = v_a - v_b$$

$$i = \frac{v_a - v_b}{R}$$

Ideal

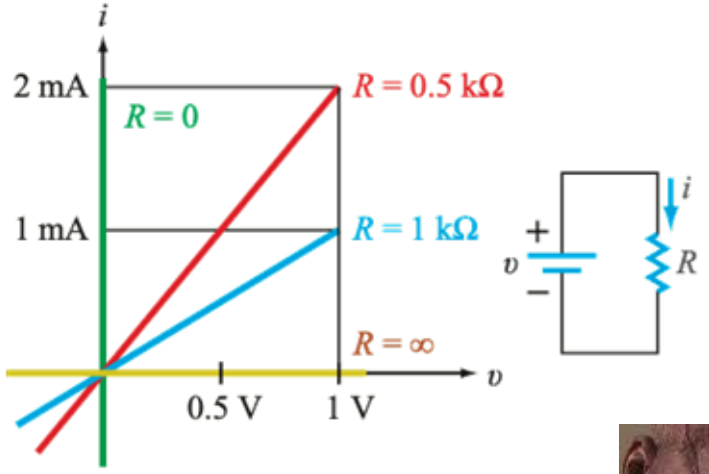


Real

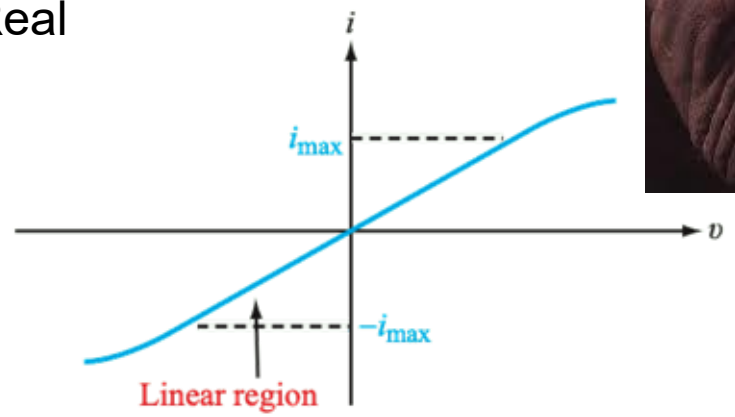

## What is Resistance Anyways

| Material | Conductivity $\sigma$ (S/m) | Resistivity $\rho$ ($\Omega$-m) |
|---|---|---|
| **Conductors** | | |
| Silver | $6.17 \times 10^{7}$ | $1.62 \times 10^{-8}$ |
| Copper | $5.81 \times 10^{7}$ | $1.72 \times 10^{-8}$ |
| Gold | $4.10 \times 10^{7}$ | $2.44 \times 10^{-8}$ |
| Aluminum | $3.82 \times 10^{7}$ | $2.62 \times 10^{-8}$ |
| Iron | $1.03 \times 10^{7}$ | $9.71 \times 10^{-8}$ |
| Mercury (liquid) | $1.04 \times 10^{6}$ | $9.58 \times 10^{-7}$ |
| **Semiconductors** | | |
| Carbon (graphite) | $7.14 \times 10^{4}$ | $1.40 \times 10^{-5}$ |
| Pure germanium | 2.13 | 0.47 |
| Pure silicon | $4.35 \times 10^{-4}$ | $2.30 \times 10^{3}$ |
| **Insulators** | | |
| Paper | $\sim 10^{-10}$ | $\sim 10^{10}$ |
| Glass | $\sim 10^{-12}$ | $\sim 10^{12}$ |
| Teflon | $\sim 3.3 \times 10^{-13}$ | $\sim 3 \times 10^{12}$ |
| Porcelain | $\sim 10^{-14}$ | $\sim 10^{14}$ |
| Mica | $\sim 10^{-15}$ | $\sim 10^{15}$ |
| Polystyrene | $\sim 10^{-16}$ | $\sim 10^{16}$ |
| Fused quartz | $\sim 10^{-17}$ | $\sim 10^{17}$ |
| **Common materials** | | |
| Distilled water | $5.5 \times 10^{-6}$ | $1.8 \times 10^{5}$ |
| Drinking water | $\sim 5 \times 10^{-3}$ | $\sim 200$ |
| Sea water | 4.8 | 0.2 |
| Graphite | $1.4 \times 10^{-5}$ | $71.4 \times 10^{3}$ |
| Rubber | $1 \times 10^{-13}$ | $1 \times 10^{13}$ |
| **Biological tissues** | | |
| Blood | $\sim 1.5$ | $\sim 0.67$ |
| Muscle | $\sim 1.5$ | $\sim 0.67$ |
| Fat | $\sim 0.1$ | 10 |

$$\rho = \frac{1}{\sigma}$$

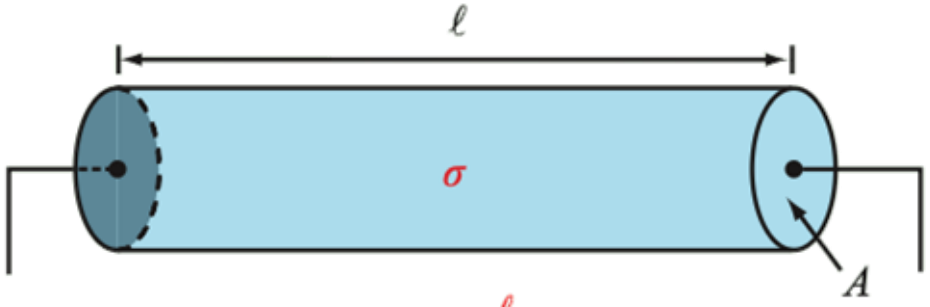


$$R = \frac{\ell}{\sigma A}$$

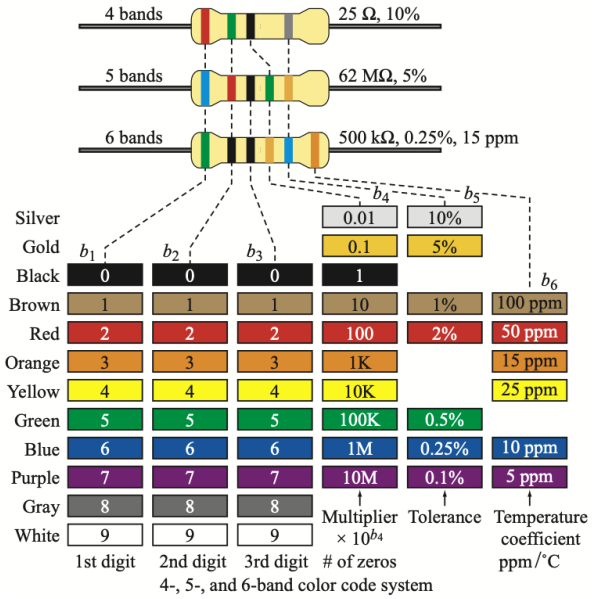


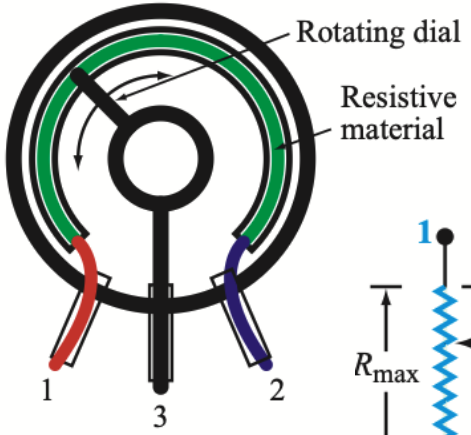


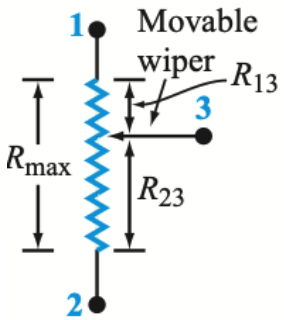

# Resistance in Series and in Parallel

Series → Same Current

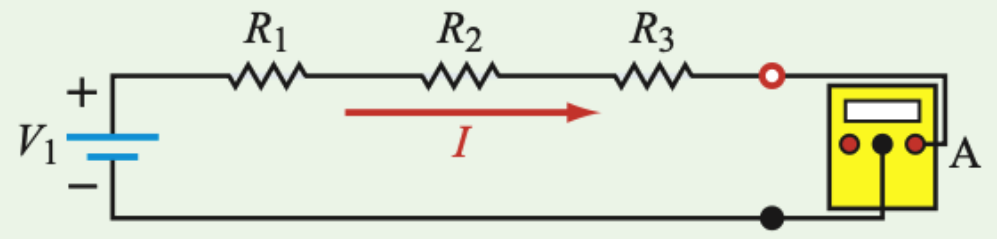


$$R_{Series} = \sum_{n=1}^{N} R_n$$

Parallel → Same Voltage

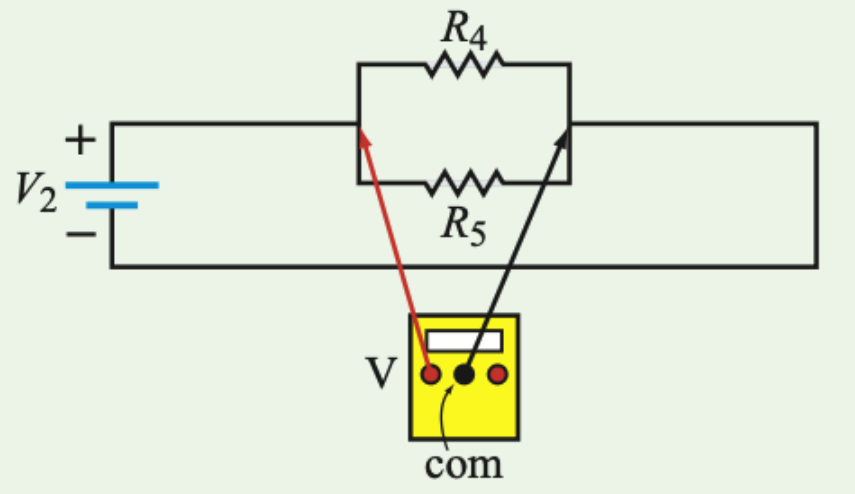


$$R_{Parallel} = \frac{1}{\sum_{n=1}^{N} \frac{1}{R_n}}$$

# Kirchhoff's Current Law (KCL)

## Gustav Robert Kirchhoff (1824-1887)

Total current entering a node = total current leaving the node

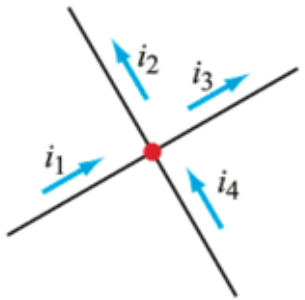


$$\mathbf{0} = \sum_{n=1}^{N} \boldsymbol{i_n} = \boldsymbol{i_1} + \boldsymbol{i_4} + (-\boldsymbol{i_2}) + (-\boldsymbol{i_3}) \quad \rightarrow \quad \boldsymbol{i_1} + \boldsymbol{i_4} = \boldsymbol{i_2} + \boldsymbol{i_3}$$

**Sign = entering (+) or existing (-) the node*

Ex)

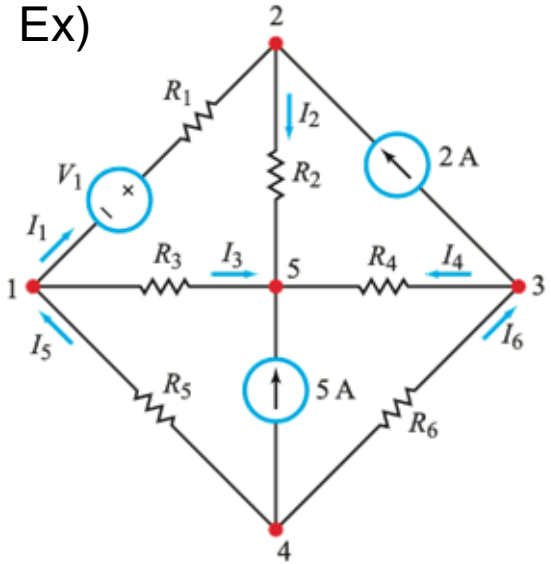


At node 1: $-I_1 - I_3 + I_5 = 0$

At node 2: $I_1 - I_2 + 2 = 0$

At node 3: $-2 - I_4 + I_6 = 0$

At node 4: $-5 - I_5 - I_6 = 0$

At node 5: $I_3 + I_4 + I_2 + 5 = 0$

# Kirchhoff's Voltage Law (KVL)

**Still the same Gustav Robert Kirchhoff (1824-1887)**

The sum of voltages around a closed loop = 0

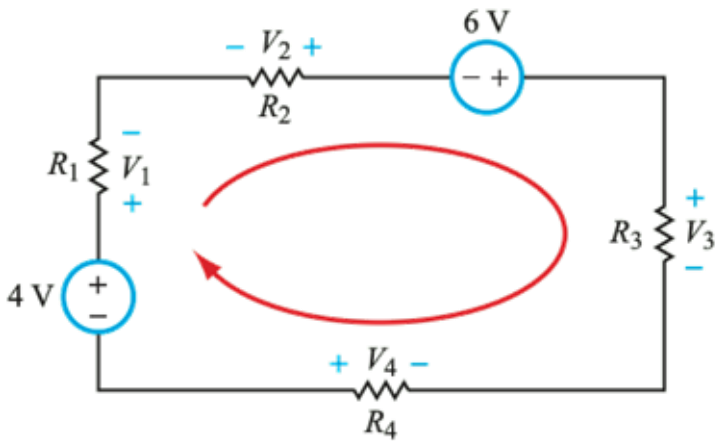


$$0 = \sum_{n=1}^{N} v_n = -4\,V + V_1 - V_2 - 6V + V_3 - V_4$$

**Sign = entering through a + terminal (+), or through a - terminal (-)*

## Example 1

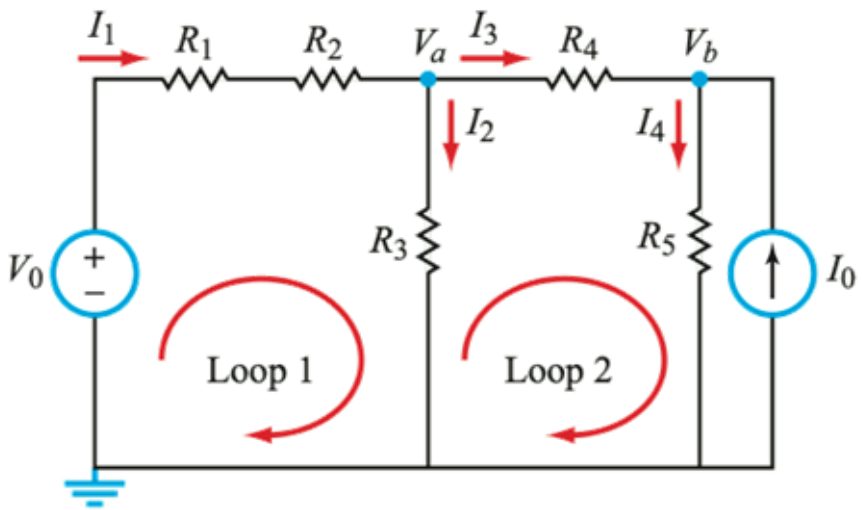


**KVL**

$$0 = \sum_{n=1}^{N} v_n$$

$$-V_0 + I_1R_1 + I_1R_2 + I_2R_3 = 0 \quad \textbf{(Loop 1)},$$

$$-I_2R_3 + I_3R_4 + I_4R_5 = 0 \quad \textbf{(Loop 2)}.$$

**KCL**

$$0 = \sum_{n=1}^{N} i_n$$

$$I_1 - I_2 - I_3 = 0 \quad \textbf{(Node } a\textbf{)},$$

$$I_3 - I_4 + I_0 = 0 \quad \textbf{(Node } b\textbf{)}.$$

$$\underbrace{\begin{bmatrix} (R_1+R_2) & R_3 & 0 & 0 \\ 0 & -R_3 & R_4 & R_5 \\ 1 & -1 & -1 & 0 \\ 0 & 0 & 1 & -1 \end{bmatrix}}_{\mathbf{A}} \underbrace{\begin{bmatrix} I_1 \\ I_2 \\ I_3 \\ I_4 \end{bmatrix}}_{\mathbf{I}} = \underbrace{\begin{bmatrix} V_0 \\ 0 \\ 0 \\ -I_0 \end{bmatrix}}_{\mathbf{B}}$$

## Example 2

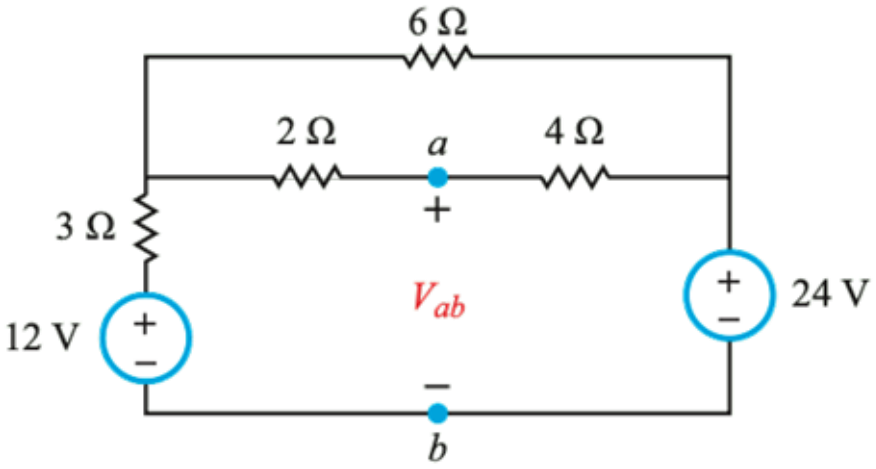


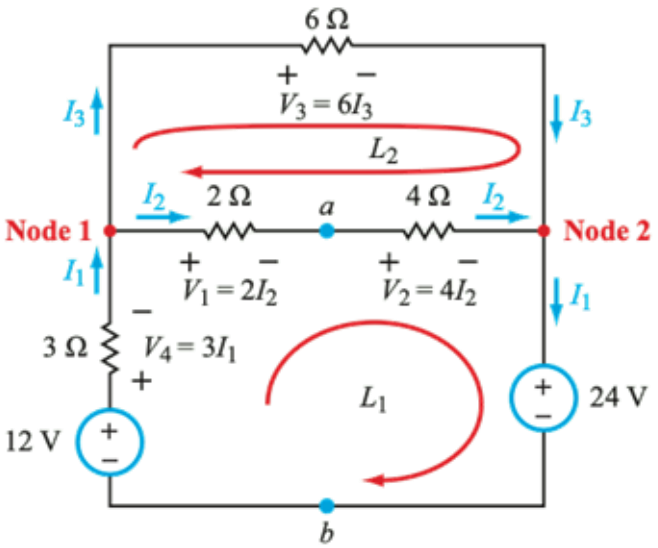


## KCL + KVL

$$-12 + V_4 + V_1 + V_2 + 24 = 0,$$

$$V_3 - V_2 - V_1 = 0.$$

$$\Rightarrow \quad -12 + 3I_1 + 2I_2 + 4I_2 + 24 = 0,$$

$$6I_3 - 4I_2 - 2I_2 = 0.$$

$$+ \quad I_1 = I_2 + I_3$$

$$\Rightarrow \quad \begin{aligned} 3I_1 + 6I_2 \qquad &= -12, \\ -6I_2 + 6I_3 &= 0, \\ I_1 - \ I_2 - \ I_3 &= 0. \end{aligned}$$

$$\Rightarrow \quad \begin{bmatrix} 3 & 6 & 0 \\ 0 & -6 & 6 \\ 1 & -1 & -1 \end{bmatrix} \begin{bmatrix} I_1 \\ I_2 \\ I_3 \end{bmatrix} = \begin{bmatrix} -12 \\ 0 \\ 0 \end{bmatrix}$$

*Super-node = a fancy word for another relational equation

## Supernode/Mesh

If the voltage source (dependent or independent) is connected between two non-reference nodes,

The two non-reference nodes form a supernode.

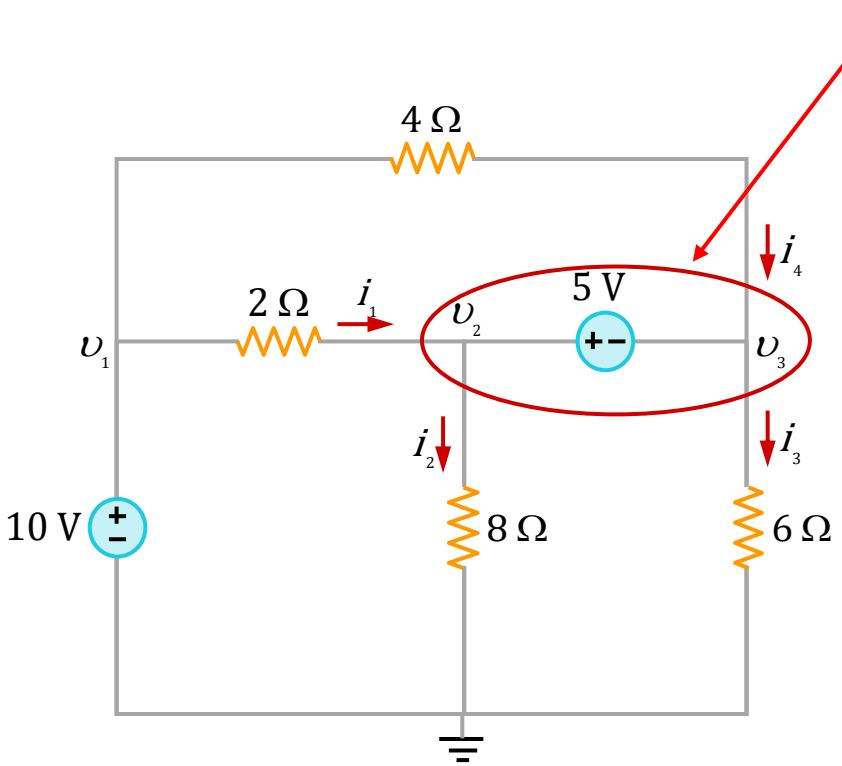


That is, you treat the two nodes (now called "a super node") as a single node such that the KCL becomes:

$$i_1 + i_4 - i_2 - i_3 = 0$$

$$\frac{v_1 - v_2}{2} + \frac{v_1 - v_3}{4} - \frac{v_2 - 0}{8} - \frac{v_3 - 0}{6} = 0$$

But since we treat two nodes as one, where each node gives us one unique equation, we have one "less" equations.

→ This is compensated by the relationship between the supernode's two nodes:

$$v_2 - v_3 = 5$$

## Supernode/Mesh

Supernode simplifies, but they are "byproducts" of the regular KCL / KVL"

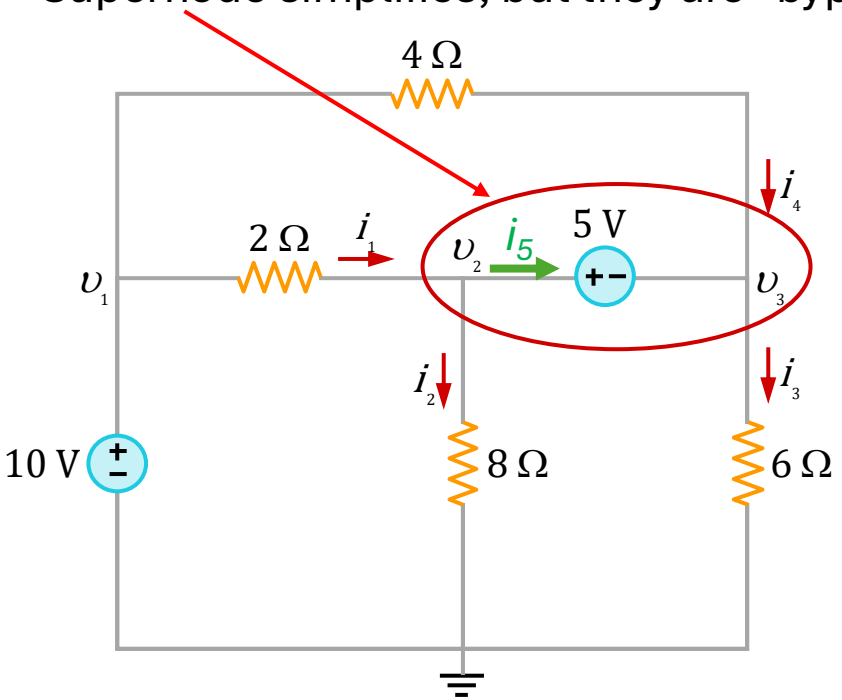


Consider what would happen if you just set up a KCL without thinking about the supernode:

We will find two "shorter" equations:

$$i_1 = i_5 + i_2$$

$$i_5 + i_4 = i_3 \rightarrow i_5 = i_3 - i_4$$

$$i_1 = i_5 + i_2 = i_3 - i_4 + i_2$$

$$\rightarrow i_1 - i_3 + i_4 - i_2 = 0$$

which is the same as the original supernode equation:

$$i_1 + i_4 - i_2 - i_3 = 0$$

## Supernode/Mesh

Once you are used to it KCL, you can indeed skip algebraic steps via supernode, but do not blindly memorize

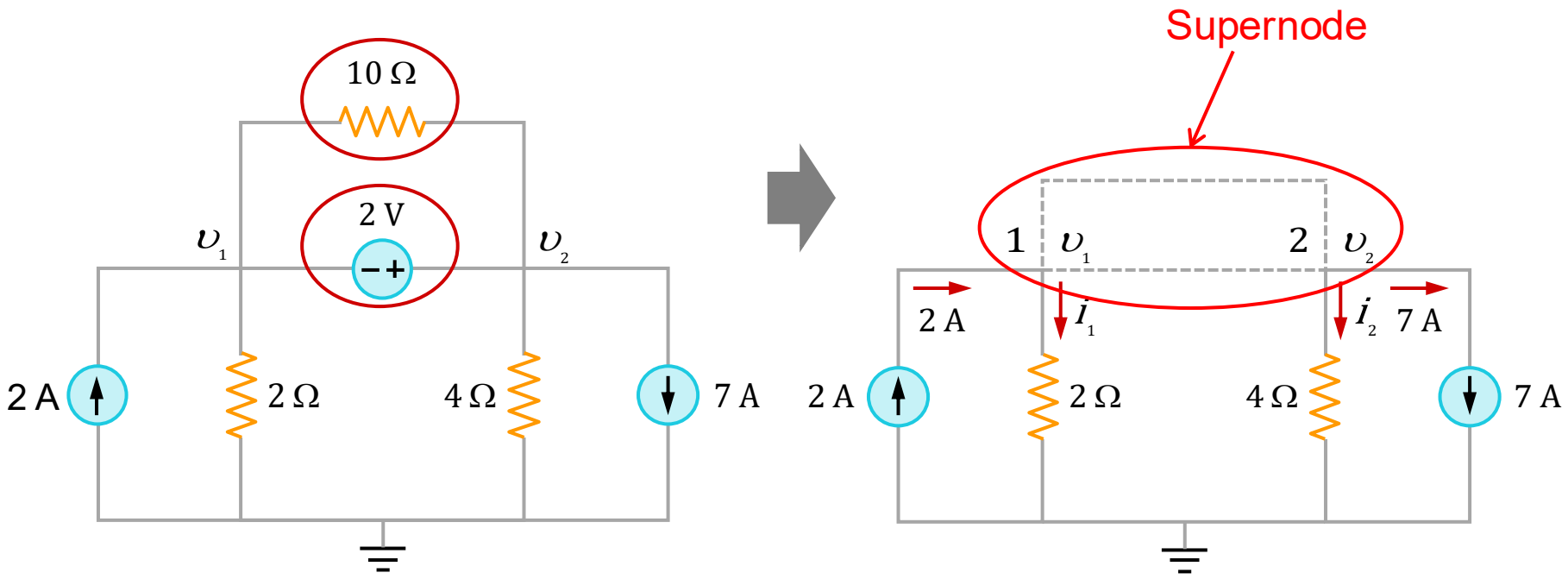


*Example 13 from **EE2101_CIRCUIT_ANALYSIS_LECTURE_1_AND_2_EXAMPLES_V1**

## Supernode/Mesh

Supermesh is a similar concept; it is just that it happens in KVL instead of KCL:

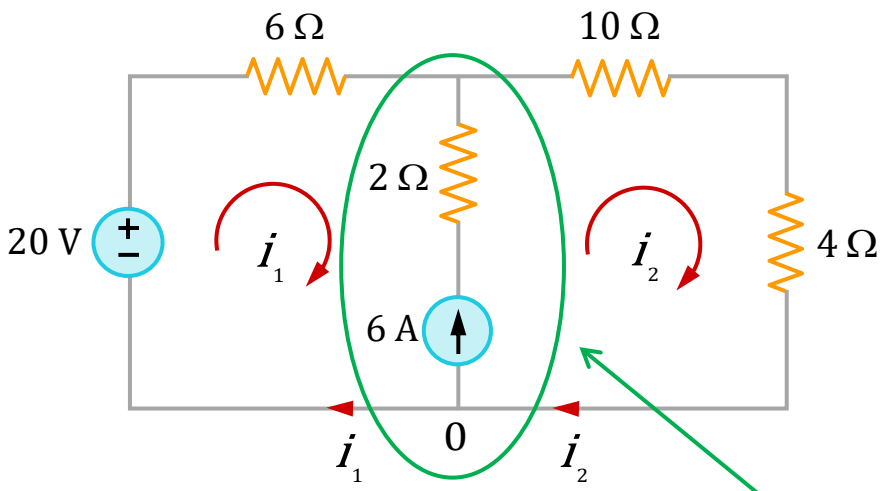


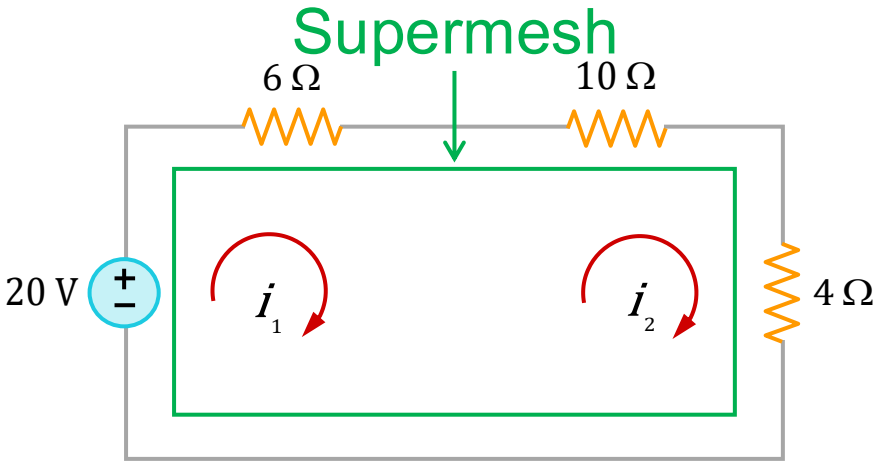


We can exclude <u>the current source</u> and any elements connected <u>in series</u>

*In supernode: we can exclude <u>the voltage source</u> and any elements connected <u>in parallel</u>

Again, the "extra" equation will come from the current source providing the relationship between $i_1$ and $i_2$

*In supernode: the extra equation comes from the voltage source providing relationship between $v_1$ and $v_2$

## Example 3

Find *I*

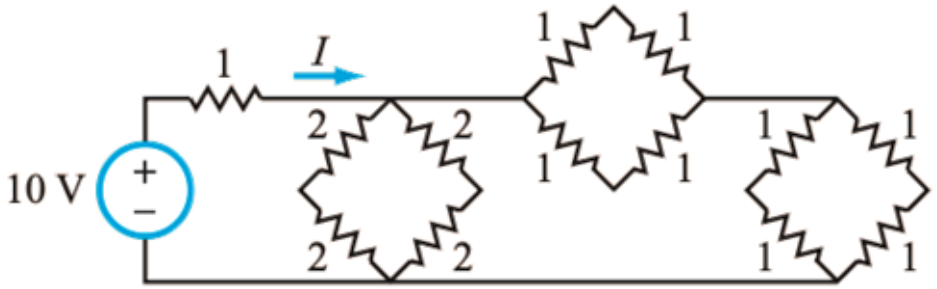

School of Electrical and Electronic Engineering
College of Engineering
Prof. Sunwoo Lee
Last Modified: 20260112

# RECAP

- *Ohm's Law* (V = IR or I = V/R) describes the relationship between Voltage, Current, and **Resistance**.
- Having the **simplest view** *of* a system makes our lives easier – a "TL;DR" representation. In many instances, we can summarize a network of resistors as a single equivalent resistor.
- Kirchhoff's Current Law (KCL) – currents should "add up."
- Kirchhoff's Voltage Law (KVL) – voltages should also "add up."
- Power ($V \cdot I = I^2R = V^2/R$) – need both the V and I.