Prof. Sunwoo Lee
Last Modified: 20260126

HOUSEKEEPING

- *Quiz 1 on Week 4 (during the Lecture 4) using NTULearn + Lockdown Browser*
  - *After 30 minutes of lecture, we will move TOGETHER to EXAM HALL C.*
  - *Covers the Weeks 1-3 (Lectures 1-3 & Tutorials 1-3)*
  - *15 problems (at least 5 of them will be very similar to what you have seen before)*
  - *30 minutes*
  - *A good preparation for a job interview*

EE2101 Circuit Analysis

Lecture 3

School of Electrical and Electronic Engineering
College of Engineering
Prof. Sunwoo Lee
Last Modified: 20260126

RECAP

- *Ohm's Law → V = IR; G = conductance = 1/R*
- *KCL (nodal, a function of voltage) & KVL (mesh, a function of current)*
- Linear System → Superposition
- Source Transformation
- Thevenin's Theorem → Norton's Theorem
- Power = V·I
- Maximum Power Transfer = when resistances were matched

Prof. Sunwoo Lee
Last Modified: 20260126

Topics Overview

- **Operational Amplifier (Op-Amp)**
- **Capacitor**
- **Inductor**
- **First Order Circuits**

School of Electrical and Electronic Engineering
College of Engineering
Prof. Sunwoo Lee
Last Modified: 20260126

Operational Amplifier (Op-Amp)

- **Operational Amplifier (Op-Amp)**
- Capacitor
- Inductor
- First Order Circuits

Operational Amplifier

A signal amplification is one of the key functions of electronics.

<u>Operational amplifier</u> is one such example, and is like voltage-controlled voltage source:

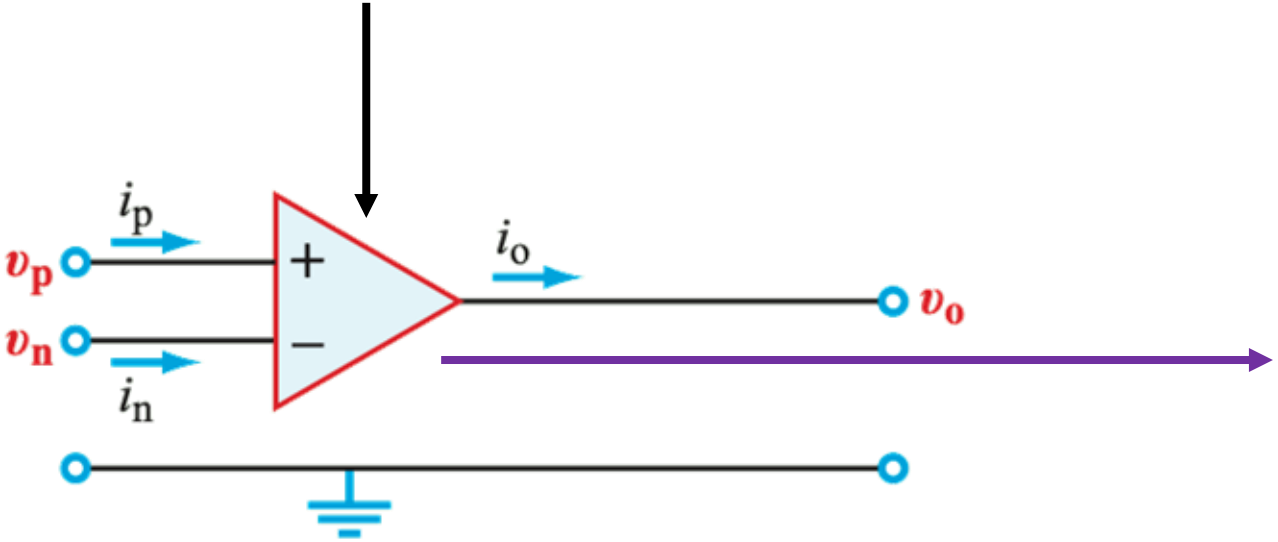

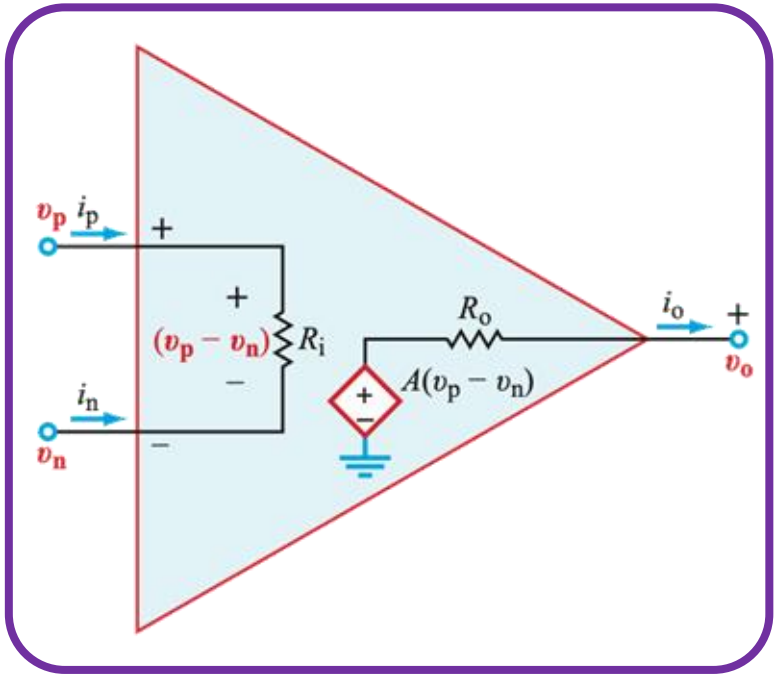

Operational Amplifier – a Real One

In fact, it may look like (TI 741):

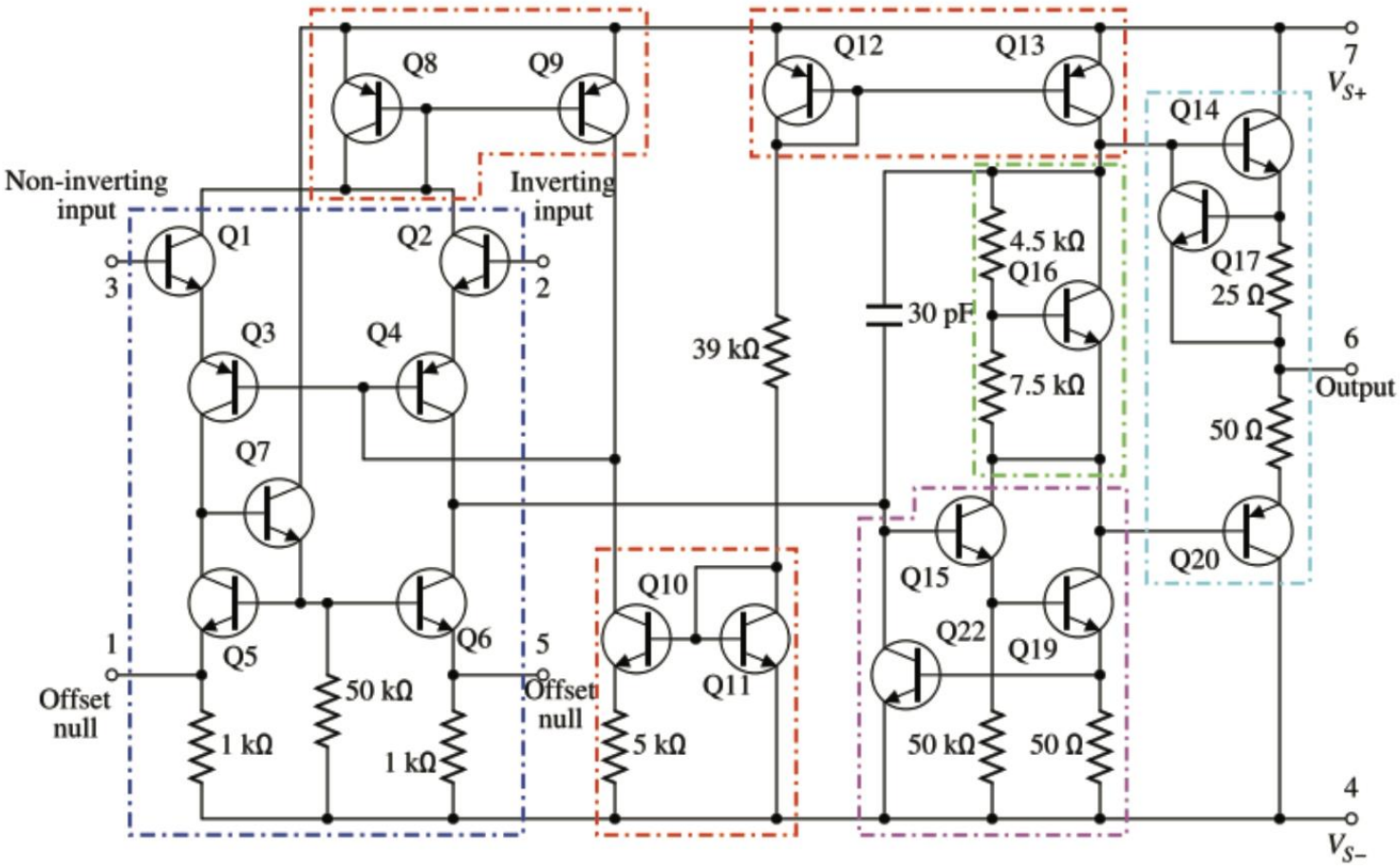

2024 *Fortune* list [edit]

This list displays the top 20 Singaporean companies in the *Fortune Southeast Asia 500*, which ranks the largest companies in Southeast Asia by annual revenue. The figures below are given in millions of US dollars and are for the fiscal year 2023.[1] Also listed are the headquarters location, net profit, number of employees worldwide and industry sector of each company.

Rank	Name	Industry	Revenue (USD millions)	Profits (USD millions)	Employees
1	Trafigura	Commodity	244,280	7,393	12,479
2	Wilmar International	Food production	67,155	1,525	100,000
3	Olam International	Agriculture	35,953	208	65,980
4	Flex Ltd.	Electronics	26,415	1,006	148,115
5	DBS Bank	Banking	25,608	7,495	40,770
6	United Overseas Bank	Banking	19,733	4,254	32,340
7	OCBC Bank	Banking	18,418	5,229	33,330
8	Singapore Airlines	Airline	14,141	1,989	16,643
9	Sea Ltd	E-commerce	13,064	163	62,70
10	Singtel	Telecommunications	10,648	1,620	24,070

https://en.wikipedia.org/wiki/List_of_largest_companies_in_Singapore

- Texas Instruments revenue for the twelve months ending June 30, 2025 was **$16.675B**, over-year.

https://www.macrotrends.net/stocks/charts/TXN/texas-instruments/revenue

In 1964, TI began development of the first laser guidance system for precision-guided munitions, leading to the Paveway series of laser-guided bombs (LGBs). The first LGB was

https://en.wikipedia.org/wiki/Texas_Instruments

Operational Amplifier – an Ideal One

A real <u>op-amp</u> can be simplified, a bit like finding a Thevenin Equivalent circuit:

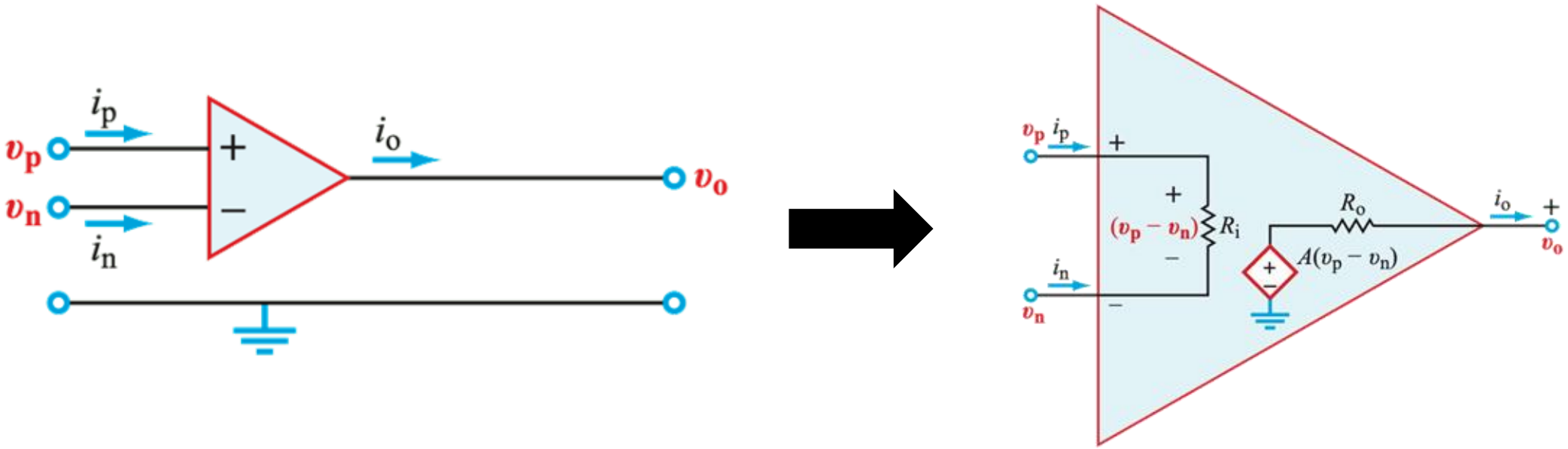

Often, we start studying an idealized case, so-called an ideal op-amp where

$A = \infty$, $R_i = \infty$, and $R_O = 0$ → *think about why*

Then, not to blow up to infinity, it has to be that **$i_p = i_n = 0$ & $v_p = v_n$**

Operational Amplifier – Ideal vs. Non-Ideal

Let us take a step back, and think about what it means to be an ideal op-amp:

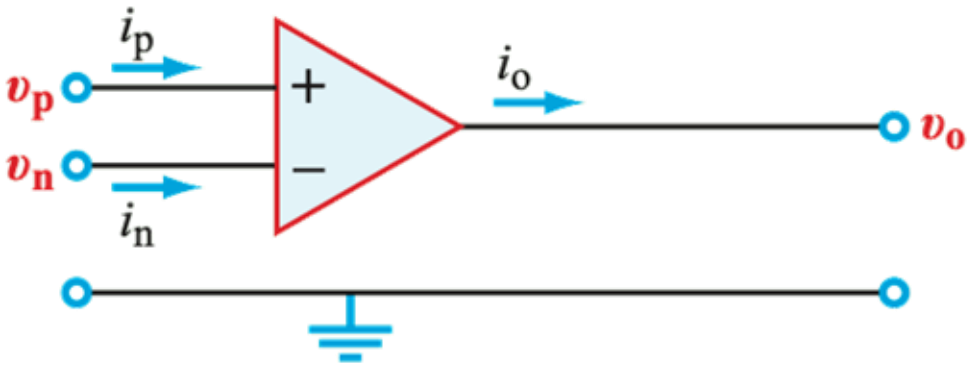

Often drawn as

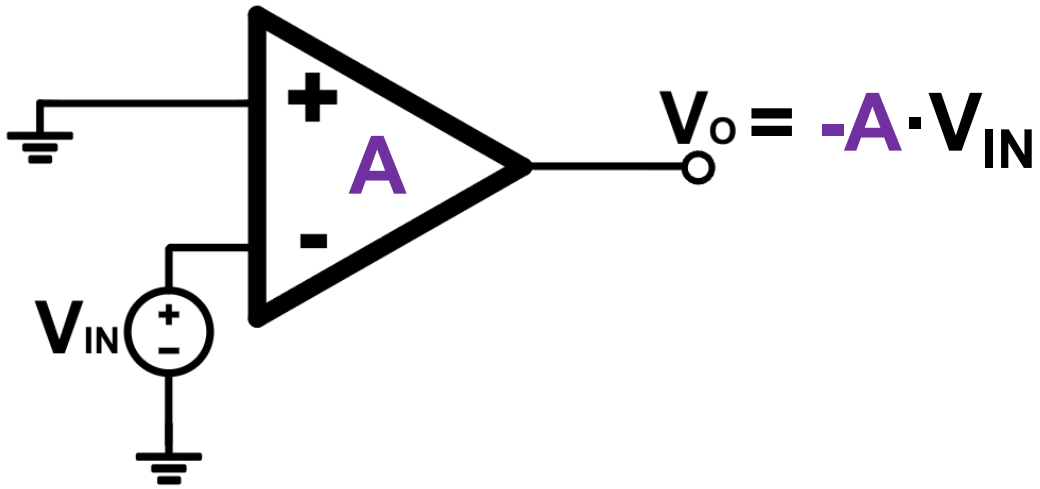

1) If the op-amp gain A = ∞, V_O = ∞ and there isn't much to do with ∞.

2) Why not just a fix A to some high value? → A is not well controlled in practice.

(*also, A has other impacts, discussed later in the course).

3) If we have a feedback, the total gain (V_O/V_{IN}) can be well-controlled & independent of the exact value of "A."

Operational Amplifier Under Feedback

One can view an Op-Amp as (similar to a block diagram):

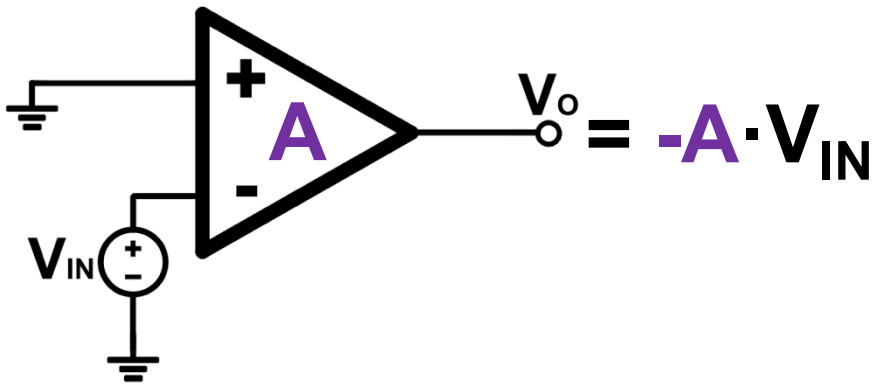

$V_O = -A \cdot V_{IN}$

$V_O = -A \cdot V_{IN}$

Consider the following, with an added negative feedback path (-β), what happens?

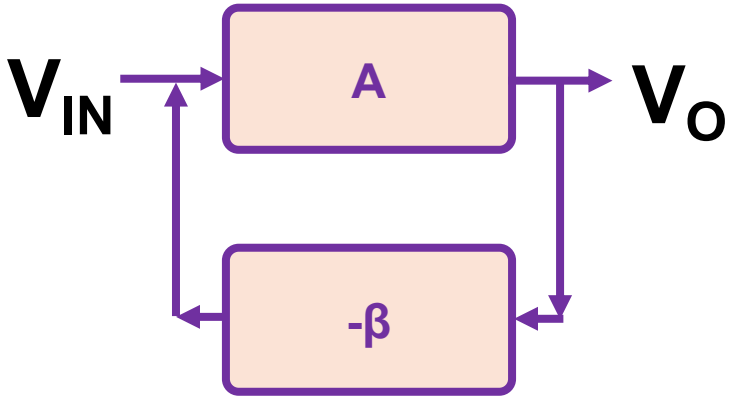

$$(V_{IN} - V_O\beta)A = V_O$$

$$\frac{V_O}{V_{IN}} = \frac{A}{1+A\beta} \rightarrow \frac{1}{\beta}$$ for "high" A

*Signals and Systems (EE2110) explores this type of depiction more in depth.

Operational Amplifier Under Feedback

Now consider this, <u>assume A to be finite</u> but there is <u>no current flowing into the op-amp</u>:

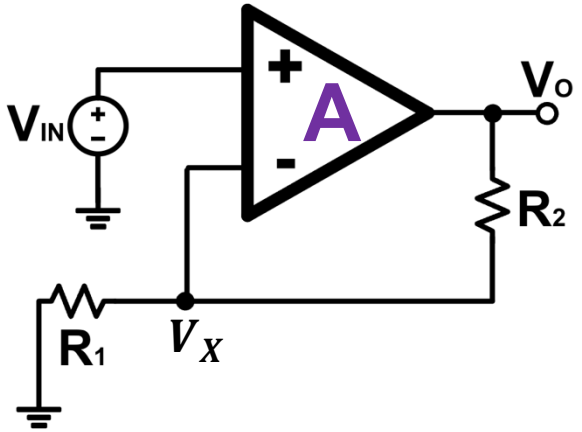

$$\frac{(V_X - 0)}{R_1} = \frac{(V_O - V_X)}{R_2}$$ and $$A \cdot (V_{IN} - V_X) = V_O$$

$$\frac{V_O}{V_{IN}} = \frac{A}{1 + A\left(\frac{R_1}{R_1 + R_2}\right)}$$

Therefore, $\beta = \frac{R_1}{R_1 + R_2}$

Q1) What happens when A → ∞? Particularly for $A \cdot (V_{IN} - V_X) = V_O$ **?**

Q2) Also recall: $\frac{V_O}{V_{IN}} = \frac{A}{1 + A\beta} \rightarrow \frac{1}{\beta}$ **when A = ∞**

Q3) What if $1 + A\beta \rightarrow 0$?

Operational Amplifier Under Feedback

You can also try:

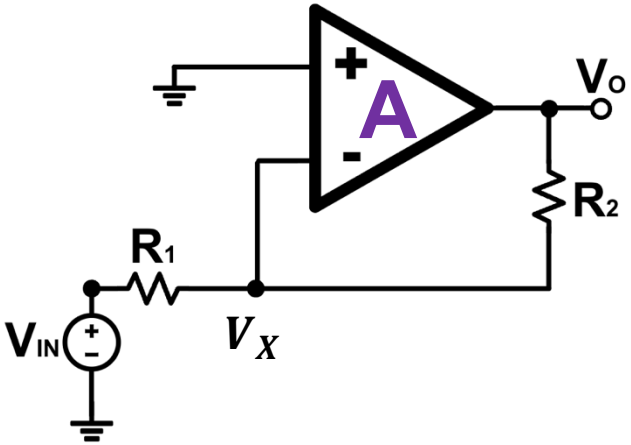

$$\frac{(V_{IN}-V_X)}{R_1} = \frac{(V_X-V_O)}{R_2}$$ and $$V_O = A \cdot (0 - V_X) = -A \cdot V_X$$

Operational Amplifier – with a Feedback

So, usually you will see an op-amp with a feedback (inverting or non-inverting) – but why?

Non-Inverting Configuration

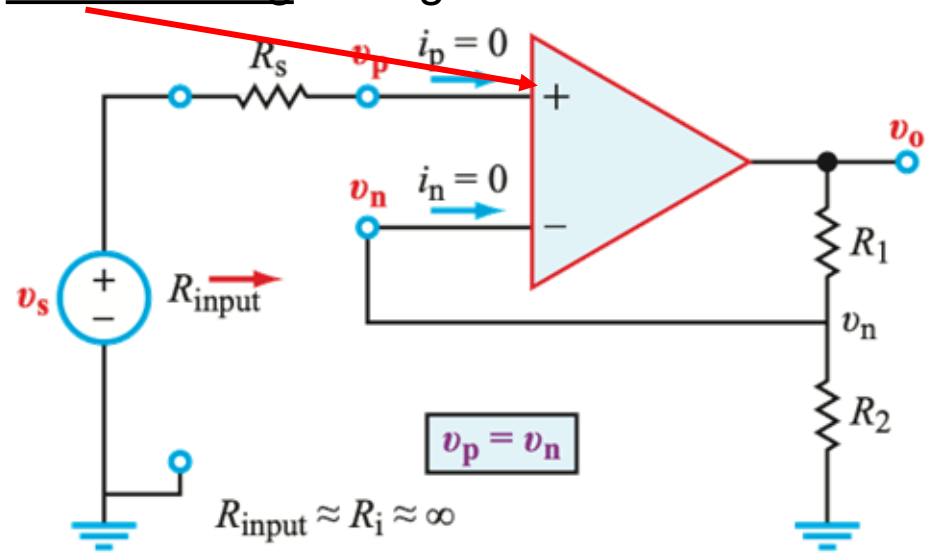

Inverting Configuration

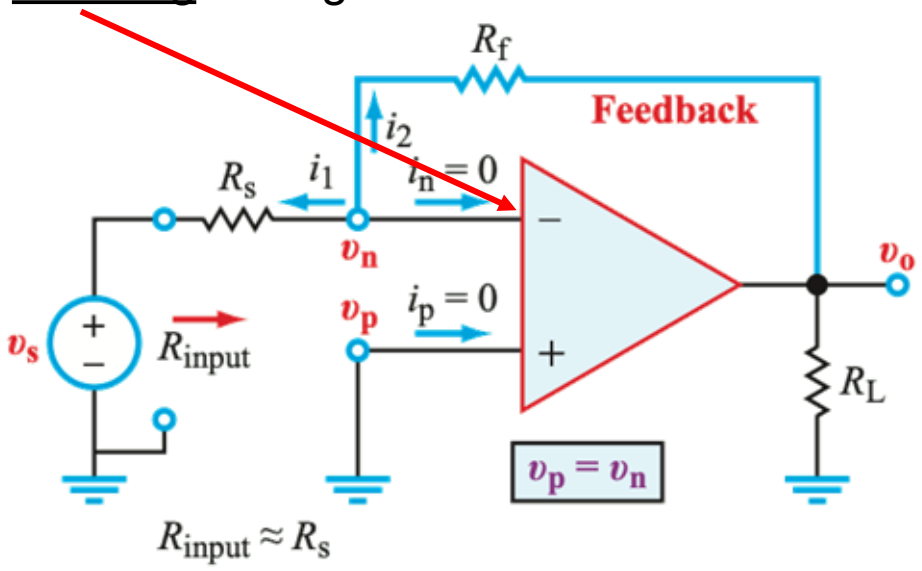

Analyzable using KCL & KVL as usual (more on that in **EE2102: Analog Electronics**)

Again, why is the feedback always going to the negative terminal?

Prof. Sunwoo Lee
Last Modified: 20260126

Capacitor

- Operational Amplifier (Op-Amp)
- **Capacitor**
- Inductor
- First Order Circuits

Capacitor as a Frequency-Dependent Element

So far, our sources has been 'constant' (= DC), not changing with time:

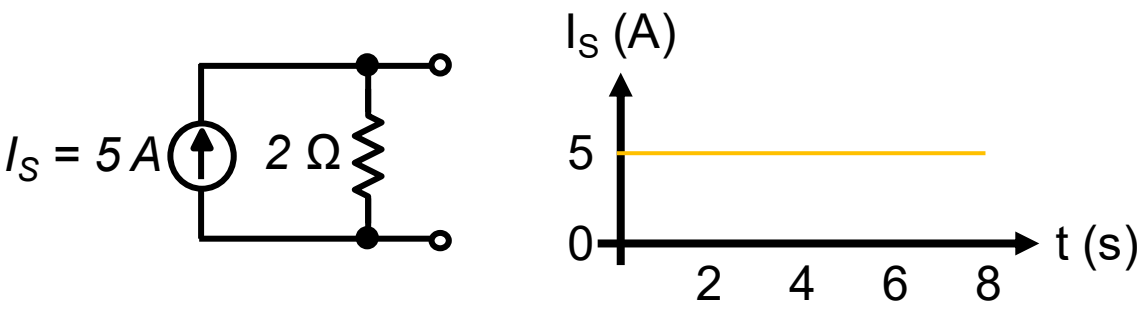

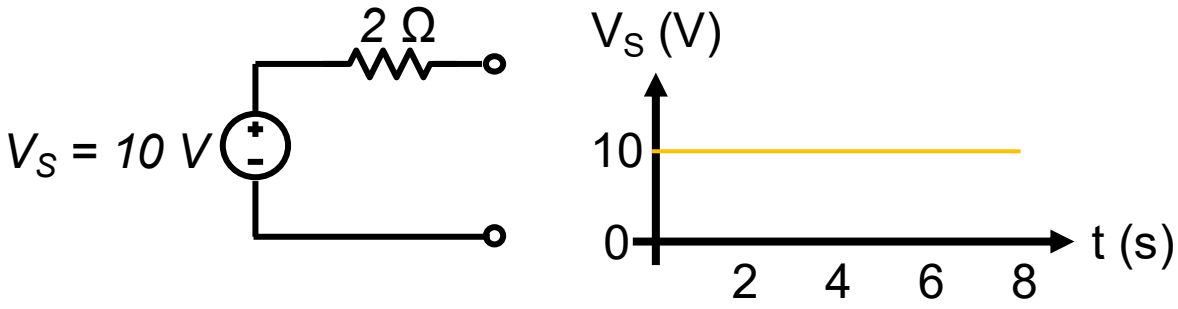

Recall:

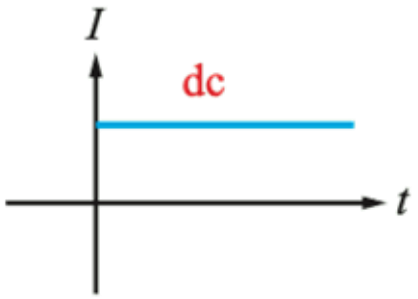

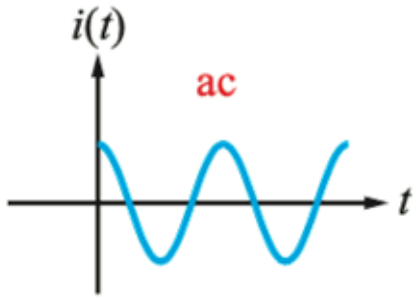

Other source voltages may also look like:

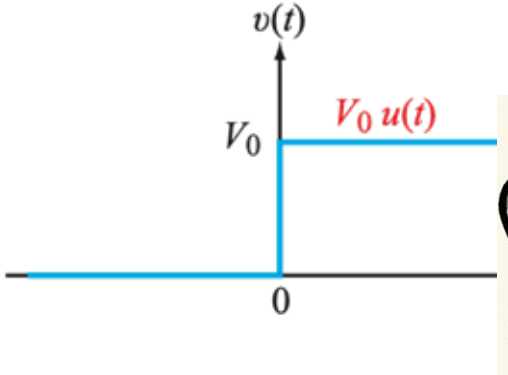

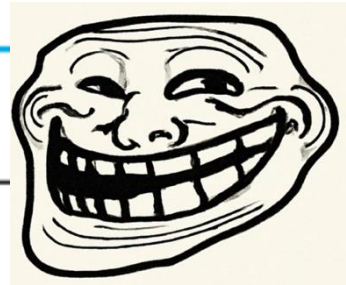

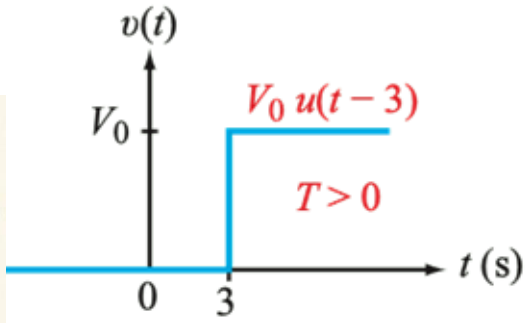

https://www.craiyon.com/en/image/HSTkHXN4S3G4biy-atDwXg

Capacitor vs. Resistor

What does a capacitor look like? So called parallel plate capacitor:

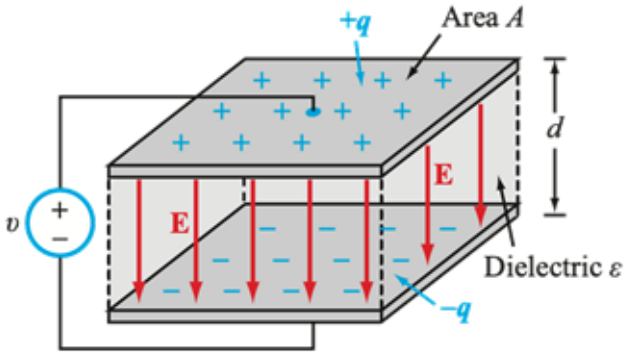

→ Consider it as a constant (for a given material)

From the E&M:

1) $C = Capacitance = \frac{\boldsymbol{\varepsilon} A}{d}$

2) $E = Electric\ Field = \frac{q}{\boldsymbol{\varepsilon} A} = \frac{q}{Cd}$

3) $Since\ E = \frac{v}{d}, we\ can\ equate: \frac{v}{d} = \frac{q}{Cd}$

$$Cv = q$$

$$or\ sometimes\ written\ as$$

$$Q = CV$$

Capacitor vs. Resistor

For resistor, we have Ohm's Law

For capacitor, we need to take the frequency-dependency into account (but how?):

1) We go back to the very beginning:

$$i = \frac{dq}{dt}$$

2) Note how "q" is defined for a capacitor: $Cv = q$

$$i = \frac{dq}{dt} = \frac{d(q)}{dt} = \frac{d(Cv)}{dt} = \boxed{C\frac{dv}{dt}}$$

3) Compare this to Ohm's Law:

$$i = \frac{v}{R}$$

C is treated as a constant in this course,

but we must deal with the time-derivative: $\frac{d}{dt}$

Energy Stored in a Capacitor

Like light and shadow, if there is derivative, there is an integral

$$i(t) = C\frac{dv(t)}{dt}$$

$$v(t) = \frac{1}{C}\int_0^t i(t')dt' = \boxed{v(t_0)} + \frac{1}{C}\int_{t_0}^t i(t')dt'$$

Initial condition

$$i = C\frac{dv}{dt}$$

What happens if *v(t)* is constant? Hence a capacitor ~ an open circuit in DC.

What about power?

$$p(t) = v(t)i(t) = Cv(t)\frac{dv(t)}{dt}$$

What about energy?

Energy w = power x time, and that's what you pay for.

More rigorously put:

$$Energy = w(t) = \int_{-\infty}^t p(t')dt' = \int_{-\infty}^t v(t')i(t')dt' = \int_{-\infty}^t v(t')C\frac{dv(t')}{dt'}dt'$$

$$= C\int_{-\infty}^t \left[\frac{d}{dt'}\left(\frac{1}{2}v^2(t')\right)\right]dt' = \frac{1}{2}Cv^2(t)$$

Capacitor Summary

$$i(t) = C\frac{dv(t)}{dt}$$

$$v(t) = \frac{1}{C}\int_0^t i(t')dt'$$

$$p(t) = Cv\frac{dv(t)}{dt}$$

$$w(t) = \frac{1}{2}Cv(t)^2$$

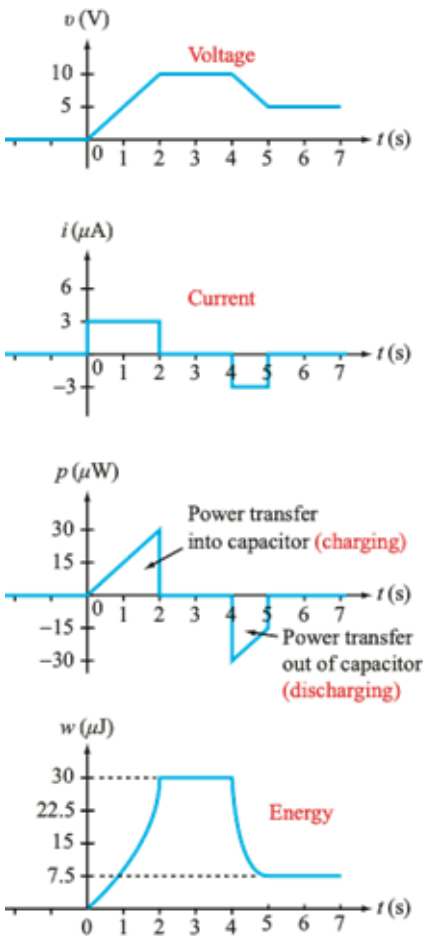

Capacitor in series (shared current):

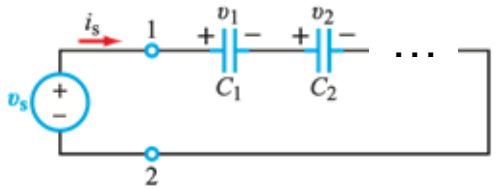

$$i_s(t) = C_1\frac{dv_1(t)}{dt} = C_2\frac{dv_2(t)}{dt}$$

$$i_s(t) = C_{eq}\frac{d\big(v_1(t)+v_2(t)\big)}{dt} = C_{eq}\left[\frac{i_s(t)}{C_1}+\frac{i_s(t)}{C_2}\right] = C_{eq}\left[\frac{1}{C_1}+\frac{1}{C_2}\right]i_s(t)$$

$$\therefore C_{eq} = \left[\frac{1}{C_1}+\frac{1}{C_2}\right]^{-1}$$

Capacitor in parallel (shared voltage):

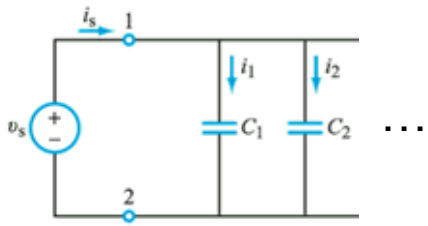

$$i_s(t) = i_1 + i_2 = C_1\frac{dv_s(t)}{dt} + C_2\frac{dv_s(t)}{dt}$$

$$= [C_1+C_2]\frac{dv_s(t)}{dt} = C_{eq}\frac{dv_s(t)}{dt}$$

$$\therefore C_{eq} = C_1 + C_2$$

School of Electrical and Electronic Engineering
College of Engineering
Prof. Sunwoo Lee
Last Modified: 20260126

Inductor

- Operational Amplifier (Op-Amp)
- Capacitor
- **Inductor**
- First Order Circuits

Inductor vs. Resistor

What does a capacitor look like? So called parallel plate capacitor:

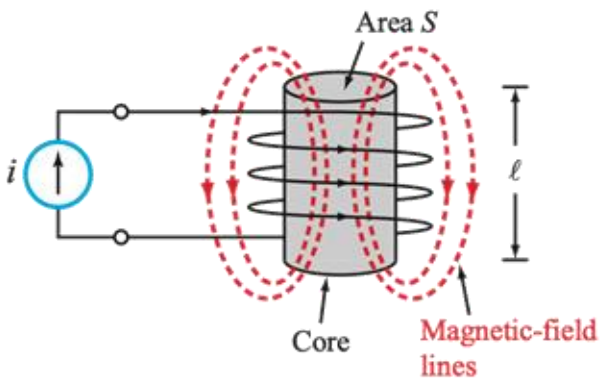

Do not need to memorize but:

$$L = \frac{\mu N^2 S}{l} \text{ where}$$

$$\mathrm{N} = \text{the number of turns}$$

$$\mu = \text{magnetic permeability}$$

$$\mathrm{S} = \text{cross} - \text{sectional area}$$

$$\mathrm{l} = \text{length}$$

From the E&M:

$$1)\ v = \frac{d\Lambda}{dt}\ where\ \Lambda\ is\ magnetic\ field\ linkage; L = \frac{\Lambda}{i}$$

→ Also do not need to memorize

$$2)\ v = \frac{d}{dt}(Li(t)) = \boxed{L\frac{di(t)}{dt}}$$

→ This I want you to memorize

*Recall: $i(t) = C\frac{dv(t)}{dt}$

Energy Stored in an Inductor

Like light and shadow, if there is derivative, there is an integral

$$v(t) = L\frac{di(t)}{dt}$$

$$i(t) = \frac{1}{L}\int_0^t v(t')dt' = \boxed{i(t_0)} + \frac{1}{L}\int_{t_0}^t v(t')dt'$$

Initial condition

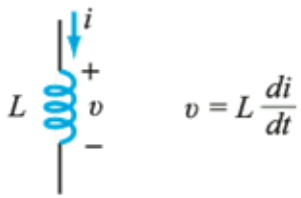

What happens if *i(t)* is constant? Hence an inductor ~ an short circuit in DC.

What about power?

$$p(t) = v(t)i(t) = Li(t)\frac{di(t)}{dt}$$

What about energy?

Energy w = power x time, and that's what you pay for.

More rigorously put:

$$Energy = w(t) = \int_{-\infty}^t p(t')dt' = \int_{-\infty}^t v(t')i(t')dt' = \int_{-\infty}^t L\frac{di(t')}{dt'}i(t')\,dt'$$

$$= L\int_{-\infty}^t \left[\frac{d}{dt'}\left(\frac{1}{2}i^2(t')\right)\right]dt' = \frac{1}{2}Li^2(t)$$

Inductor Summary

Inductors in series (shared current):

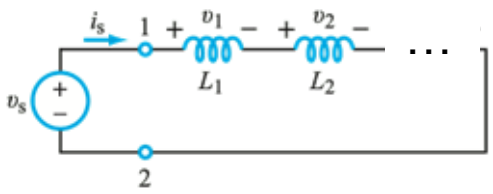

$$v_s(t) = v_1(t) + v_2(t) = L_1\frac{di_s}{dt} + L_2\frac{di_s}{dt} = (L_1 + L_2)\frac{di_s}{dt}$$

$$\therefore L_{eq} = L_1 + L_2$$

Inductors in parallel (shared voltage):

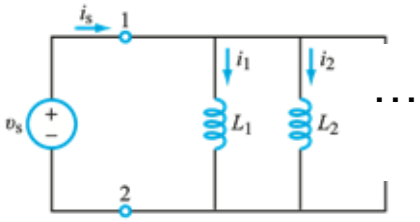

$$v_s(t) = v_1 = v_2 = L_1\frac{di_{s1}(t)}{dt} = L_2\frac{di_{s2}(t)}{dt}$$

$$= L_{eq}\frac{di_s(t)}{dt} = L_{eq}\left(\frac{di_{s1}(t)}{dt} + \frac{di_{s2}(t)}{dt}\right) = L_{eq}\left(\frac{v_{s1}(t)}{L_1} + \frac{v_{s2}(t)}{L_2}\right) = L_{eq}\left(\frac{1}{L_1} + \frac{1}{L_2}\right)v_s(t) \quad \therefore L_{eq} = \left[\frac{1}{L_1} + \frac{1}{L_2}\right]^{-1}$$

Prof. Sunwoo Lee
Last Modified: 20260126

Resistor vs. Capacitor vs. Inductor

Property	R	L	C
i–v relation	$i = \frac{v}{R}$	$i = \frac{1}{L}\int_{t_0}^{t} v\,dt' + i(t_0)$	$\boxed{i = C\frac{dv}{dt}}$
v-i relation	$v = iR$	$\boxed{v = L\frac{di}{dt}}$	$v = \frac{1}{C}\int_{t_0}^{t} i\,dt' + v(t_0)$
p (power transfer in)	$p = i^2R$	$p = Li\frac{di}{dt}$	$p = Cv\frac{dv}{dt}$
w (stored energy)	0	$w = \frac{1}{2}Li^2$	$w = \frac{1}{2}Cv^2$
Series combination	$R_{eq} = R_1 + R_2$	$L_{eq} = L_1 + L_2$	$\frac{1}{C_{eq}} = \frac{1}{C_1} + \frac{1}{C_2}$
Parallel combination	$\frac{1}{R_{eq}} = \frac{1}{R_1} + \frac{1}{R_2}$	$\frac{1}{L_{eq}} = \frac{1}{R_1} + \frac{1}{R_2}$	$C_{eq} = C_1 + C_2$
dc behavior	no change	short circuit	open circuit
Can v change instantaneously?	yes	yes	no
Can i change instantaneously?	yes	no	yes

Prof. Sunwoo Lee
Last Modified: 20260126

First Order Circuits

- Operational Amplifier (Op-Amp)
- Capacitor
- Inductor
- **First Order Circuits**

First Order Circuits – Source-Free Capacitor

Capacitors and inductors introduce "derivatives" in KCL/KVL → differential equations

$$i(t) = C\frac{dv(t)}{dt}$$

$$v(t) = L\frac{di(t)}{dt}$$

Ex)

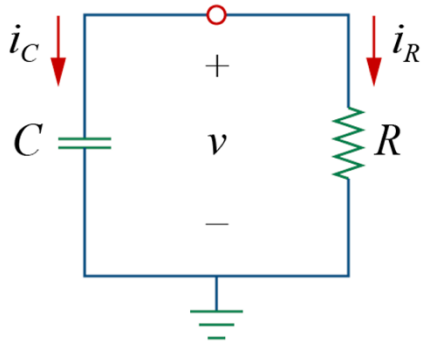

$$i_C(t) + i_R(t) = 0$$

$$C\frac{dv(t)}{dt} + \frac{v(t)}{R} = 0$$

$$\frac{dv(t)}{dt} + \frac{v(t)}{\boxed{RC}} = 0$$

The RC time constant you may have heard of …

First Order Circuits – Source-Free Capacitor

Continuing from the previous slide:

Ex)

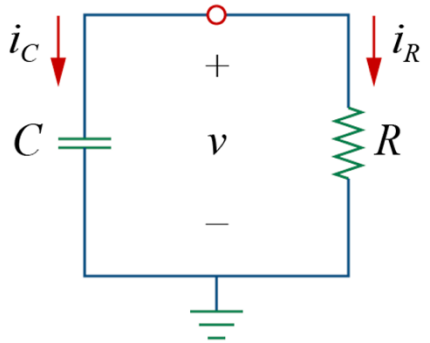

$$\frac{dv(t)}{dt} + \frac{v(t)}{\boxed{RC}} = 0$$

$$\frac{d\boxed{v(t)}}{dt} = -\frac{v(t)}{RC} = \left(\frac{-1}{RC}\right)\boxed{v(t)}$$

→ Exponential function has such a behavior:

$$i.e., \frac{d[e^{b\cdot t}]}{dt} = be^{b\cdot t}$$

$$\therefore \frac{dv(t)}{dt} = \left(\frac{-1}{RC}\right)v(t)$$ leads to $\boxed{v(t) = v(0)e^{-t/RC}}$

$$v(t) = v(0)e^{-t/\tau}$$

τ = RC

First Order Circuits – Inductor with a Source

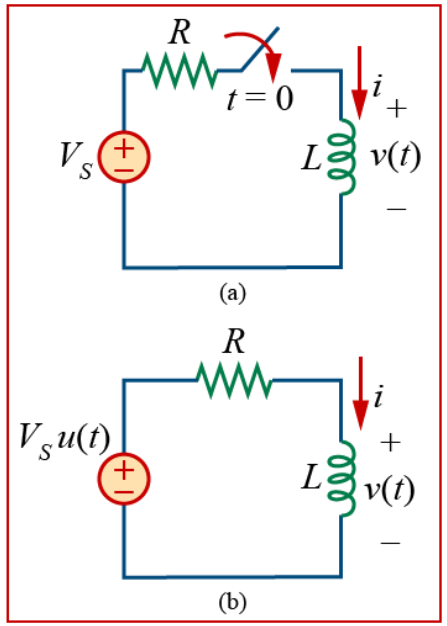

For ***t*** **>** 0, apply KVL

$$V_s = Ri + L\frac{di}{dt} \quad \Rightarrow \quad \frac{di}{dt} + \frac{R}{L}i = \frac{V_s}{L}$$

$$\Rightarrow \quad \frac{di}{dt} = \frac{-Ri + V_s}{L} = \frac{-R}{L}\left(i - \frac{V_s}{R}\right)$$

$$\Rightarrow \quad di = \frac{-R}{L}\left(i - \frac{V_s}{R}\right)dt$$

$$\Rightarrow \quad \frac{di}{i - (V_s/R)} = \frac{-R}{L}dt$$

$$\Rightarrow \ln[i(t) - (V_s/R)] = \frac{-R}{L}t + C$$

$$\Rightarrow i(t) - (V_s/R) = e^C \cdot e^{-(R/L)t} \quad where \quad e^C = I_0 - (V_s/R)$$

$$\Rightarrow \quad i(t) = \frac{V_s}{R} + \left(I_0 - \frac{V_s}{R}\right)e^{-(R/L)t}$$

- Initial current
  $i(0^-) = i(0^+) = I_0$
- Final inductor current
  $i(\infty) = V_s/R$
- Time constant
  $\tau = L/R$

$$\boxed{i(t) = \frac{V_s}{R} + \left(I_0 - \frac{V_s}{R}\right)e^{-\frac{t}{\tau}}} \quad t \geq 0$$