Prof. Sunwoo Lee
Last Modified: 20260202

HOUSEKEEPING

- *Quiz 1 Today in ~30 minutes @ **EXAM HALL C**:*
  - *15 problems (at least 5 of them will be very similar to what you have seen before)*
  - *30 minutes*
  - *A good preparation for a job interview*

EE2101 Circuit Analysis

Lecture 4

School of Electrical and Electronic Engineering
College of Engineering
Prof. Sunwoo Lee
Last Modified: 20260202

RECAP

- *Ohm's Law, KCL (nodal, a function of voltage), and KVL (mesh, a function of current)*
- Linear System → Superposition
- Source Transformation | Thevenin's Theorem → Norton's Theorem
- Power = V·I → Maximum Power vs. Current or Voltage Transfer
- Op Amp (a voltage-controlled voltage source for voltage amplification) | Ideal: $A = \infty$, $R_i = \infty$, and $R_O = 0$
- Capacitors and Inductors → First Order Circuits → Differential Equations

Prof. Sunwoo Lee
Last Modified: 20260202

Topics Overview

- **First Order Circuits**
- **Second Order Circuits**

Prof. Sunwoo Lee
Last Modified: 20260202

Topics Overview

- **First Order Circuits**
- **Second Order Circuits**

First Order Circuits – Source-Free Capacitor

Capacitors and inductors introduce "derivatives" in KCL/KVL → differential equations

Last time:

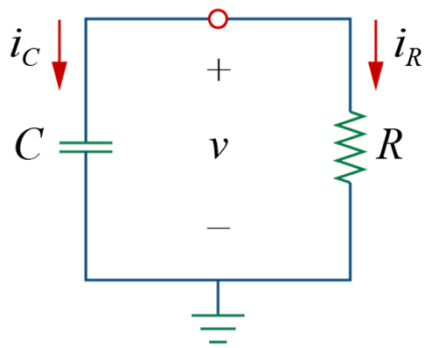

$$i_C(t) + i_R(t) = 0 \rightarrow \quad C\frac{dv(t)}{dt} + \frac{v(t)}{R} = 0 \rightarrow \quad \frac{dv(t)}{dt} + \frac{v(t)}{\boxed{RC}} = 0$$

$$\therefore \frac{dv(t)}{dt} = \left(\frac{-1}{RC}\right)v(t) \quad \text{leads to } v(t) = v(0)e^{-t/RC} \rightarrow \boxed{v(t) = v(0)e^{-t/\tau}}$$

*The time constant τ of a circuit
= the time required to decay by 1/**e** or 36.8% of its initial value.

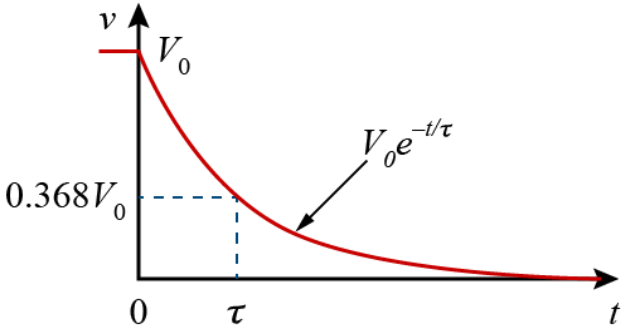

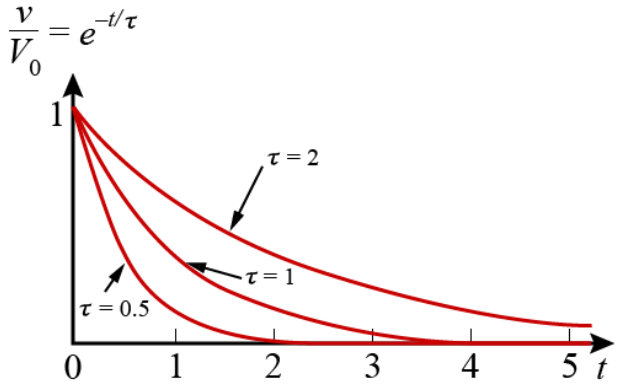

First Order Circuits – Source-Free Inductor

Capacitors and inductors introduce "derivatives" in KCL/KVL → differential equations

$$i(t) = C\frac{dv(t)}{dt} \qquad v(t) = L\frac{di(t)}{dt}$$

Consider:

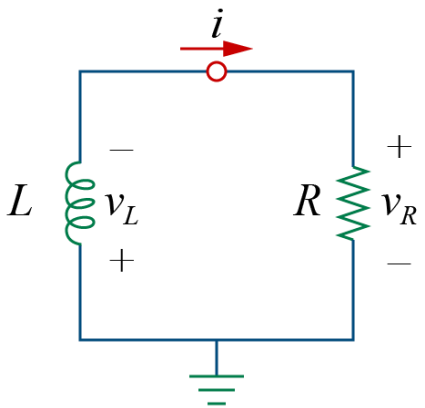

$$v_L(t) + v_R(t) = 0 \rightarrow L\frac{di(t)}{dt} + i(t)R = 0 \rightarrow \frac{di(t)}{dt} + \frac{i(t)}{L/R} = 0$$

$$\therefore \frac{di(t)}{dt} = \left(\frac{-1}{L/R}\right) i(t)$$ leads to $$i(t) = i(0)e^{-t/(\frac{L}{R})}$$

$$i(t) = i(0)e^{-t/\tau}$$

τ = L/R

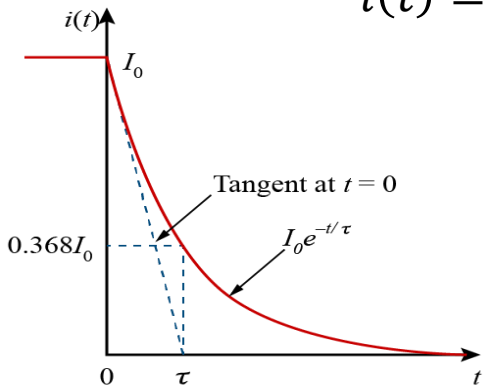

First Order Circuits – Examples

Ex 1)

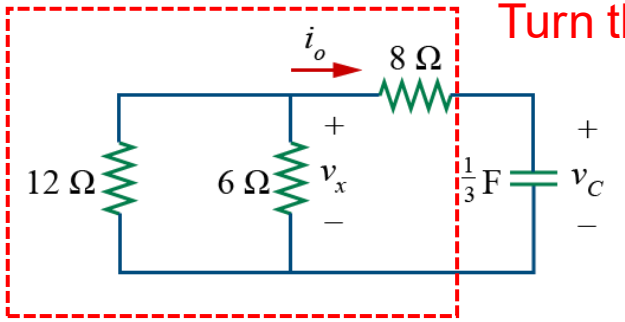

Turn this into an equivalent R → Same as a source-free R-C case

Ex 2)

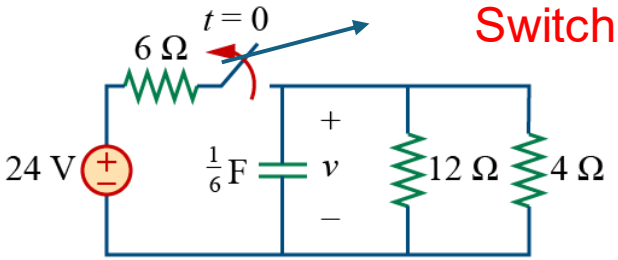

Switching provides an initial condition

After the switch opens, same as a source-free R-C circuit

First Order Circuits – Examples

Ex 3)

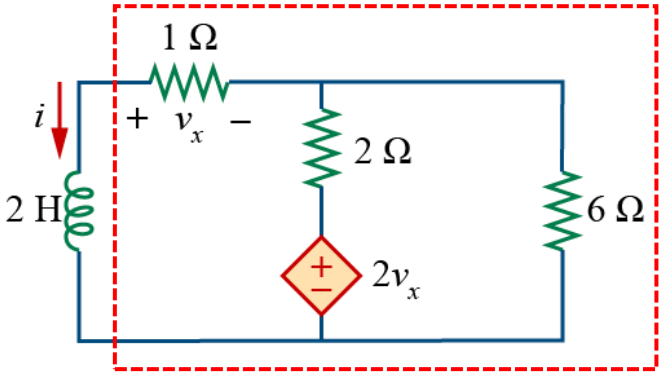

Turn this into an equivalent R_{TH} → Same as a source-free R_{TH}-L case

Ex 4)

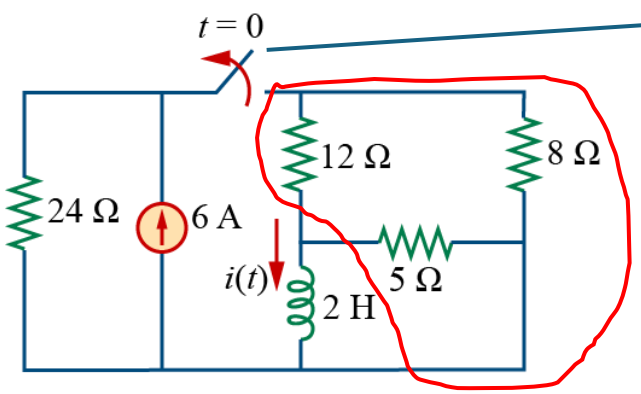

Switching provides an initial condition

After the switch opens, same as a source-free R_{TH}-L circuit

Unit Step Functions with "Shifts"

$$u(t) = \begin{cases} 0, & t < 0 \\ 1, & t \geq 0 \end{cases}$$

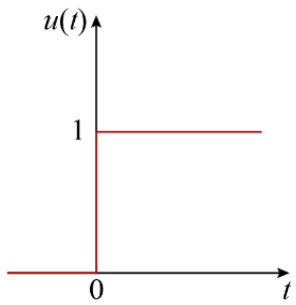

$$u(t - t_o) = \begin{cases} 0, & t < t_o \\ 1, & t \geq t_o \end{cases}$$

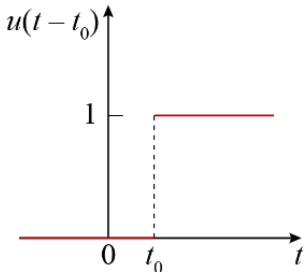

$$u(t + t_o) = \begin{cases} 0, & t < -t_o \\ 1, & t \geq -t_o \end{cases}$$

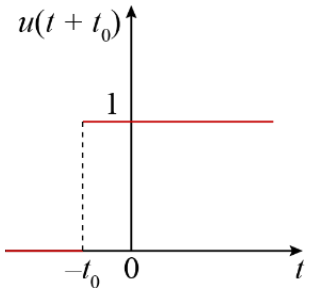

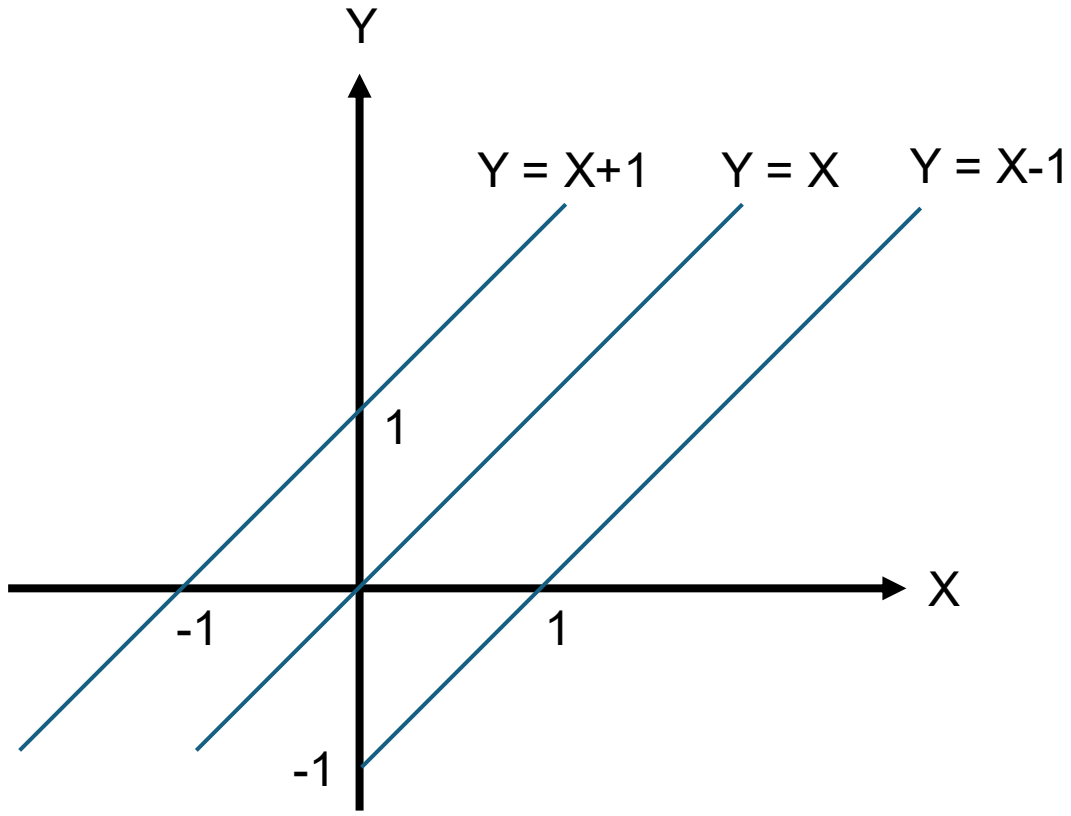

"Shifted" Functions

Shifting around:

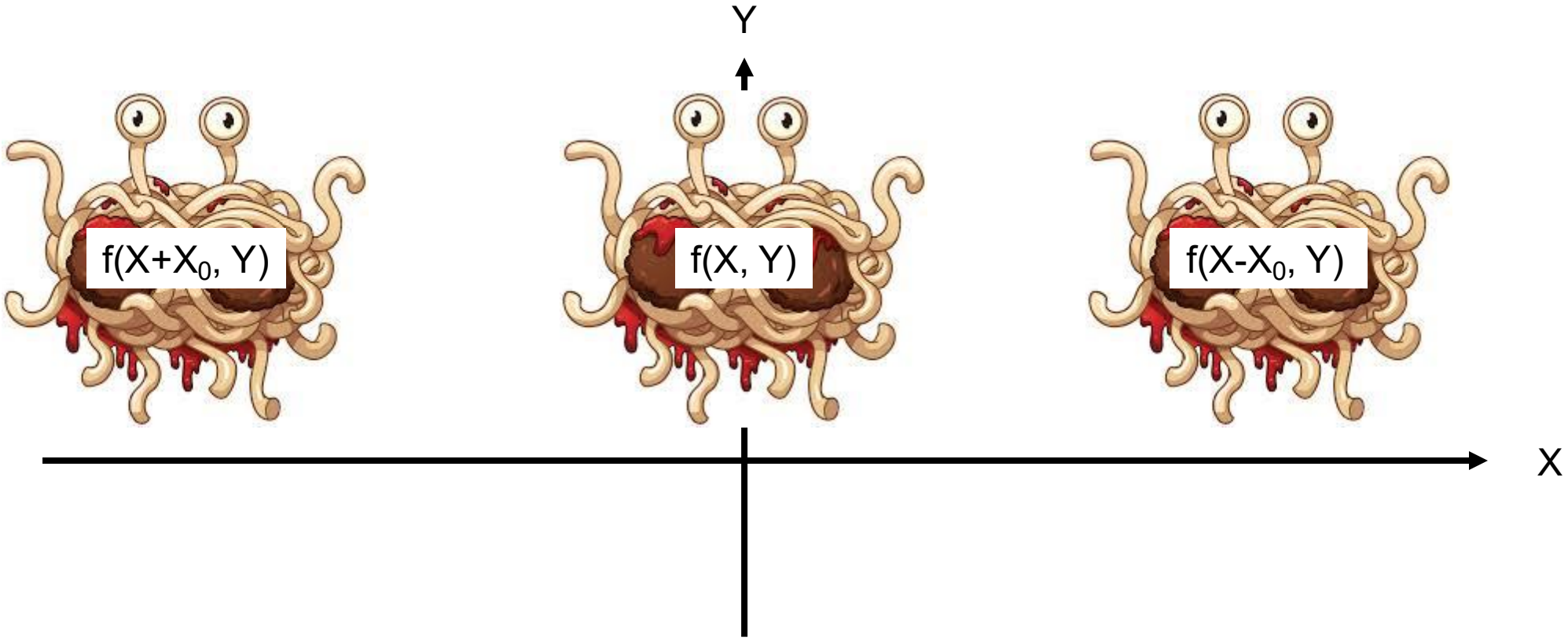

https://www.britannica.com/topic/Flying-Spaghetti-Monster

Step Functions to Represent Source Behaviours

Step Function = good for representing switching behaviours:

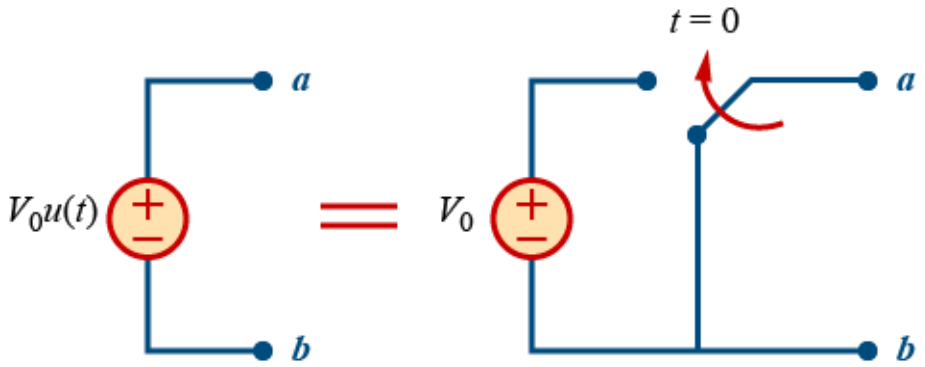

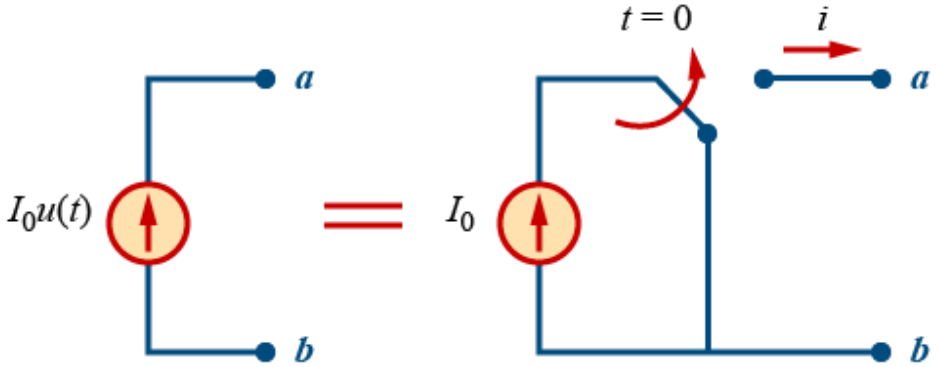

Step Response of an RC Circuit

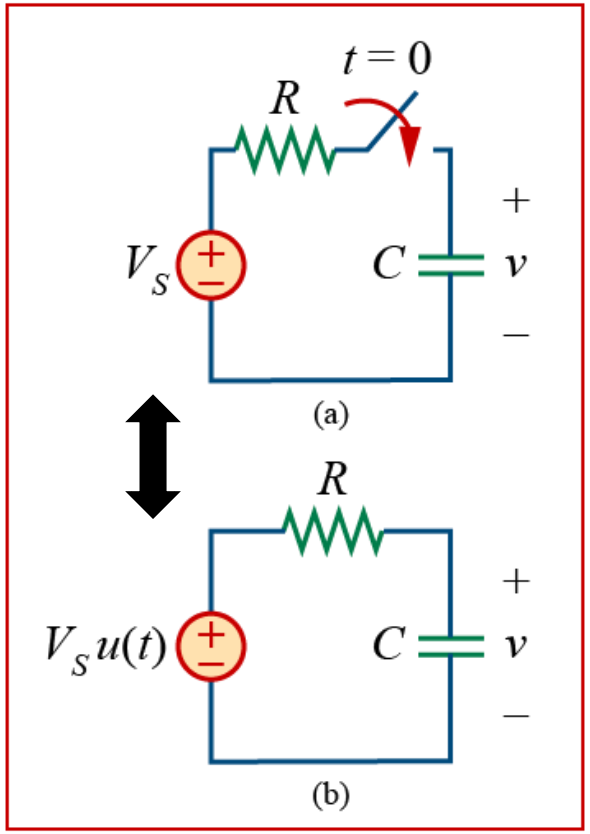

- <u>Initial voltage</u>: $\boldsymbol{v}(0^-) = \boldsymbol{v}(0^+) = \boldsymbol{V}_0$ & <u>Final voltage</u>: $\boldsymbol{v}(\infty) = \boldsymbol{V}_s$
- Applying KCL for t > 0,

$$C\frac{dv(t)}{dt} + \frac{v(t) - V_s}{R} = 0 \rightarrow \frac{dv(t)}{dt} + \frac{v(t)}{CR} = \frac{V_s}{CR} \rightarrow \frac{dv(t)}{dt} + \frac{v(t)}{\tau} = \frac{V_s}{\tau}$$

$$\frac{dv(t)}{dt} = -\frac{(v(t) - V_s)}{\tau} \rightarrow \frac{dv(t)}{v(t) - V_s} = -\frac{1}{\tau}dt$$

$$\int_0^t \frac{dv(t)}{v(t) - v_s} = -\int_0^t \frac{1}{\tau}dt \rightarrow \ln[v(t) - V_s] - \ln[v(0) - V_s] = -\frac{t}{\tau}$$

$$\therefore \ln\frac{v(t) - V_s}{v(0) - V_s} = -\frac{t}{\tau} \rightarrow v(t) = V_s + [v(0) - V_s]e^{-\frac{t}{\tau}}$$

Step Response of an RC Circuit

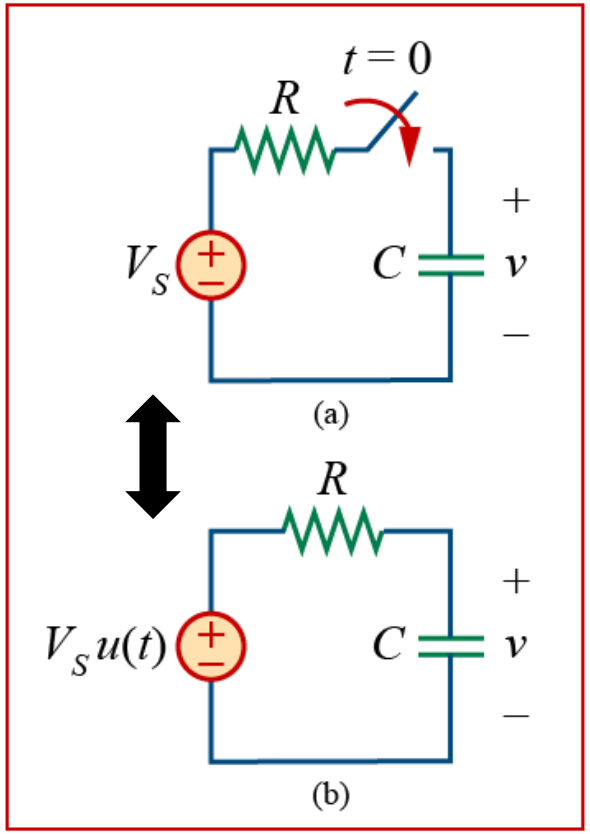

- Initial voltage: $v(0^-) = v(0^+) = V_0$ & Final voltage: $v(\infty) = V_s$

$$v(t) = V_s + [v(0) - V_s]e^{-\frac{t}{\tau}}$$

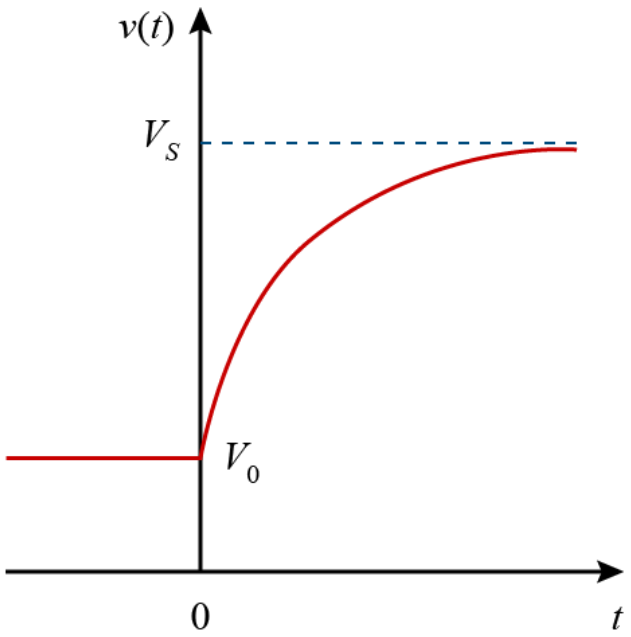

$$v(t) = \begin{cases} V_o & t < 0 \\ V_s + (V_o - V_s)e^{-t/\tau} & t \geq 0 \end{cases}$$

Initial value at $t = 0$

Final value at $t \to \infty$

$V_o e^{-t/\tau}$ + $V_s(1 - e^{-t/\tau})$

Natural response (stored energy)

Force response (independent source)

= Complete response

Step Response of an RL Circuit

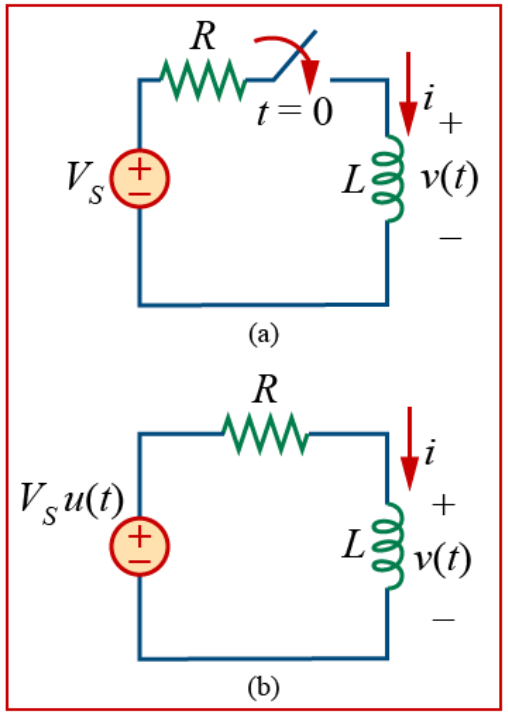

For ***t*** **>** 0, KVL:

$$V_s = Ri + L\frac{di}{dt} \rightarrow \frac{di}{dt} + \frac{R}{L}i = \frac{V_s}{L}$$

$$\Rightarrow \frac{di(t)}{dt} = \frac{-R \cdot i(t) + V_s}{L} = \frac{-R}{L}\left(i - \frac{V_s}{R}\right)$$

$$\Rightarrow di(t) = \frac{-R}{L}\left(i(t) - \frac{V_s}{R}\right)dt$$

$$\Rightarrow \frac{di(t)}{i(t) - (V_s/R)} = \frac{-R}{L}dt$$

$$\Rightarrow \ln[i(t) - (V_s/R)] - \ln[I_0 - (V_s/R)] = \ln\frac{i(t) - (V_s/R)}{I_0 - (V_s/R)} = \frac{-R}{L}t$$

$$\Rightarrow \frac{i(t) - (V_s/R)}{I_0 - (V_s/R)} = e^{-(R/L)t}$$

$$\Rightarrow i(t) = \frac{V_s}{R} + \left(I_0 - \frac{V_s}{R}\right)e^{-(R/L)t}$$

- Initial & final conditions (currents):
  $i(0^-) = i(0^+) = I_0$ & $i(\infty) = V_s/R$
- Time constant $\tau = L/R$

$$\boxed{i(t) = \frac{V_s}{R} + \left(I_0 - \frac{V_s}{R}\right)e^{-\frac{t}{\tau}}} \quad t \geq 0$$

Prof. Sunwoo Lee
Last Modified: 20260202

Topics Overview

- First Order Circuits
- **Second Order Circuits**

Second Order Circuits

If KVL/KCL Yields Second Order Derivatives → Second Order Circuits

For instance:

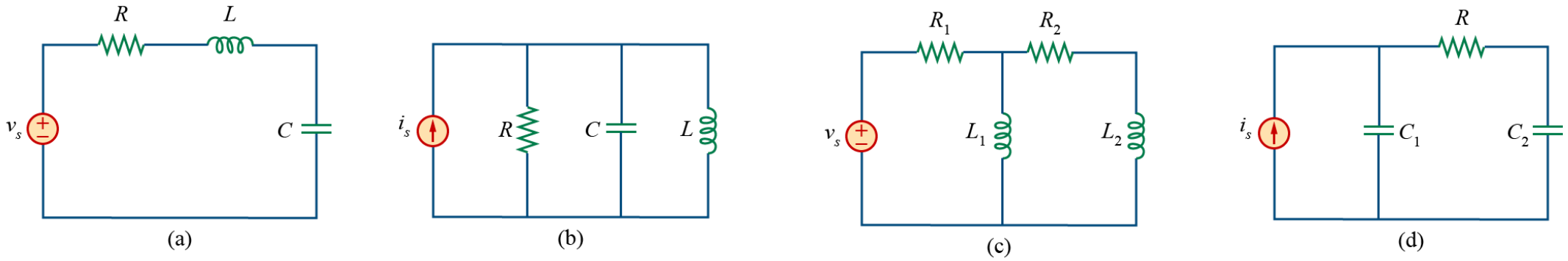

RLC series

RLC parallel

RL *T*-config

RC *Pi*-config

Second Order Circuits

Consider a “simple” case:

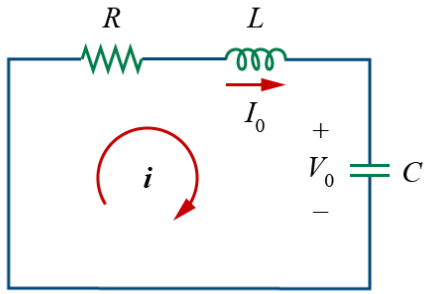

$$i(t)R + L\frac{di(t)}{dt} + \frac{1}{C}\int_0^t i(t)\ dt + v(0) = 0$$

$$R\frac{di(t)}{dt} + L\frac{d^2i(t)}{dt^2} + \frac{i(t)}{C} = 0$$

$$\boxed{\frac{d^2i(t)}{dt^2} + \frac{R}{L}\frac{di(t)}{dt} + \frac{i(t)}{LC} = 0}$$

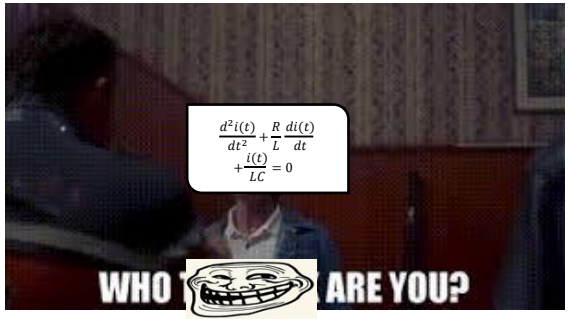

Trainspotting (1996)
https://www.youtube.com/watch?v=lt6vM5VxPNw&ab_channel=TheBackFocus