EE2101 Circuit Analysis

Lecture 5

School of Electrical and Electronic Engineering
College of Engineering
Prof. Sunwoo Lee
Last Modified: 20260209

HOUSEKEEPING

- *Labs start this week – see NTULearn for briefings, manuals, etc., if have not already.*
- ***LECTURE 6 = This Friday at 2 PM at LT 1 (Will be recorded & posted in NTULearn)***
  - ***NO MONDAY (or FRIDAY for PART-TIME) LECTURE on WEEK 6***
- *Final Exam → 50 % of your final grade*
- *Quiz 2 on WEEK 7 (same logistics as in Quiz 1, except that you have 40 minutes)*

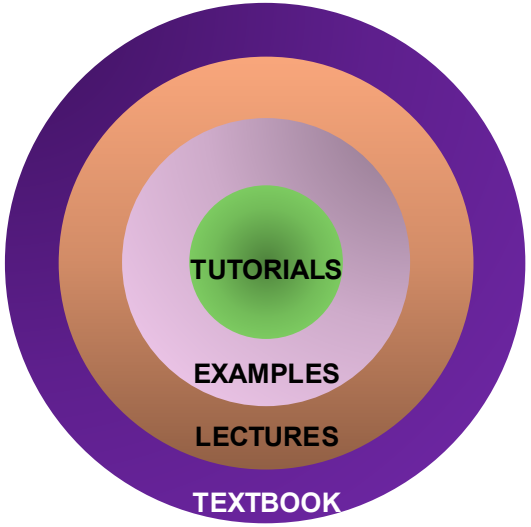

EE2101 Circuit Analysis

Lecture 5

School of Electrical and Electronic Engineering
College of Engineering
Prof. Sunwoo Lee
Last Modified: 20260209

RECAP

- Capacitors and Inductors → First Order Circuits → Differential Equations
- “More” Capacitors and Inductors → Second Order Circuits → Differential Equations

Prof. Sunwoo Lee
Last Modified: 20260209

Topics Overview

- **Second Order Circuits**
- **Laplace Transform**

Prof. Sunwoo Lee
Last Modified: 20260209

Second Order Circuits

- **Second Order Circuits**
- **Laplace Transform**

Second Order Circuits

If KVL/KCL Yields Second Order Derivatives → Second Order Circuits

For instance:

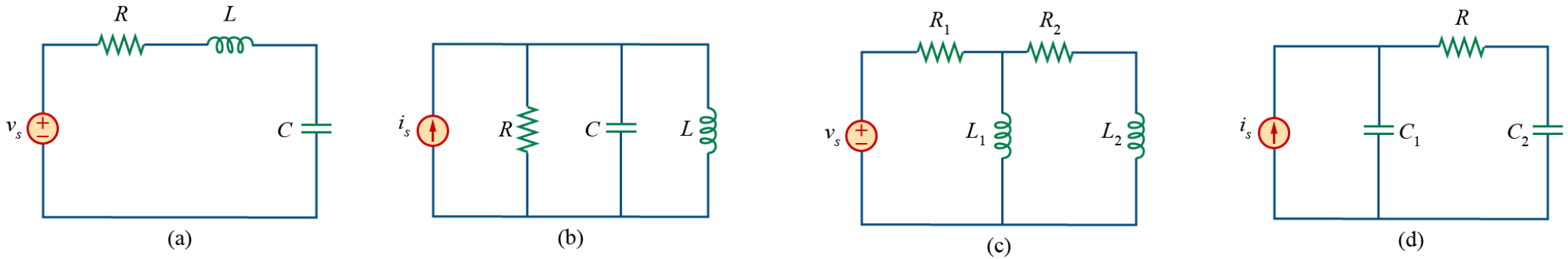

RLC series

RLC parallel

RL *T*-config

RC *Pi*-config

Second Order Circuits

Consider a “simple” case:

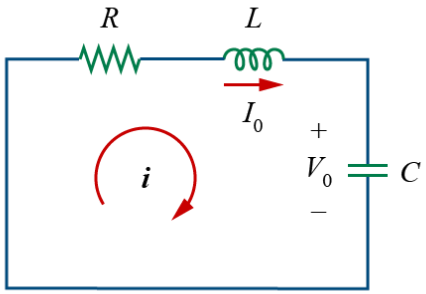

$$i(t)R + L\frac{di(t)}{dt} + \frac{1}{C}\int_0^t i(t)\ dt + v(0) = 0$$

$$R\frac{di(t)}{dt} + L\frac{d^2i(t)}{dt^2} + \frac{i(t)}{C} = 0$$

$$\boxed{\frac{d^2i(t)}{dt^2} + \frac{R}{L}\frac{di(t)}{dt} + \frac{i(t)}{LC} = 0}$$

Second Order Circuits → Second Order Differential Equation → General Solution

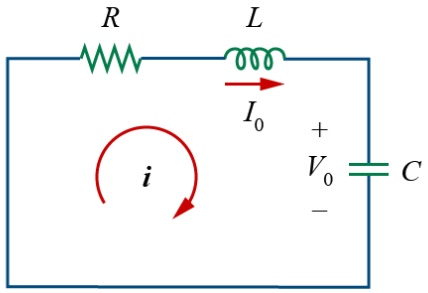

$$\frac{d^2 i(t)}{dt^2} + \frac{R}{L}\frac{di(t)}{dt} + \frac{1}{LC} i(t) = 0$$

- Consider a second-order differential equation (where $f(t)$ = forcing function)

$$\frac{d^2x}{dt^2} + a_1\frac{dx}{dt} + a_0 x = f(t)$$

- "Natural response (when $f(t) = 0$)" :

$$\frac{d^2x}{dt^2} + a_1\frac{dx}{dt} + a_0 x = 0$$

→ This equation is known as a homogenous equation (zero forcing function).

→ One possibility is the exponential form, $x(t) = Ae^{st}$, where *A* and *s* are constants:

$$\frac{dx}{dt} = Ase^{st}; \qquad \frac{d^2x}{dt^2} = As^2e^{st}$$

Second Order Circuits → Second Order Differential Equation → General Solution

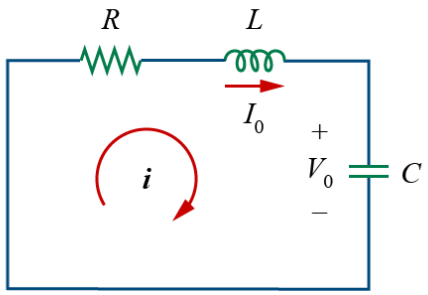

$$\frac{d^2 i(t)}{dt^2} + \frac{R}{L}\frac{di(t)}{dt} + \frac{1}{LC} i(t) = 0$$

$$\frac{dx}{dt} = Ase^{st}; \qquad \frac{d^2x}{dt^2} = As^2e^{st}$$

- The equation can be rewritten as:

$$As^2e^{st} + a_1Ase^{st} + a_0Ae^{st} = 0$$

$$Ae^{st}(s^2 + a_1s + a_0) = 0$$

→ Since $e^{st} \neq 0$ and for non-zero A, it is followed that :

$$s^2 + a_1s + a_0 = 0$$

→ This equation is called the characteristic equation and the solutions are:

$$s_{1,2} = \frac{-a_1 \pm \sqrt{{a_1}^2 - 4a_0}}{2}$$

Second Order Circuits → Second Order Differential Equation → General Solution

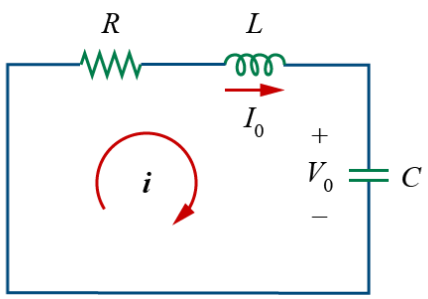

$$\frac{d^2 i(t)}{dt^2} + \frac{R}{L}\frac{di(t)}{dt} + \frac{1}{LC} i(t) = 0$$

$$i(t) = Ae^{st}$$

$$\frac{d^2 x}{dt^2} + a_1 \frac{dx}{dt} + a_0 x = 0$$

$$x(t) = Ae^{st}$$

$$s_1 = \frac{-a_1 + \boxed{\sqrt{{a_1}^2 - 4a_0}}}{2} \qquad s_2 = \frac{-a_1 - \boxed{\sqrt{{a_1}^2 - 4a_0}}}{2}$$

$(a_1^2 - 4a_0) > 0 \rightarrow$ Real and distinct roots $(s_1 = -\alpha_1,\ s_2 = -\alpha_2)$

$(a_1^2 - 4a_0) = 0 \rightarrow$ Real and equal roots $(s_{1,2} = -\alpha)$

$(a_1^2 - 4a_0) < 0 \rightarrow$ Complex roots $(s_{1,2} = -\alpha \pm j\omega_d)$

1) <u>Real and distinct roots</u>

Overdamped response: $x = A_1 e^{-\alpha_1 t} + A_2 e^{-\alpha_2 t}$

2) <u>Equal (repeated) roots</u>

Critically damped response: $x = D_1 e^{-\alpha t} + D_2 t e^{-\alpha t}$

<u>Recall</u>
extra "t" to obtain two unique equations

3) <u>Complex roots</u>

Underdamped response: $x = B_1 e^{-\alpha t}\cos\omega_d t + B_2 e^{-\alpha t}\sin\omega_d t$

*$A_1, A_2, B_1, B_2, D_1, D_2$ are constants to be determined.

Second Order Circuits → Applying the General Solution to Our KVL

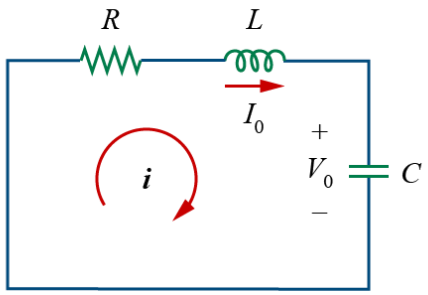

$$\frac{d^2i(t)}{dt^2} + \frac{R}{L}\frac{di(t)}{dt} + \frac{1}{LC}i(t) = 0$$

$$i(t) = Ae^{st}$$

1. Assume: $i(t) = Ae^{st}$, then $\frac{di(t)}{dt} = Ase^{st}$ and $\frac{d^2i(t)}{dt^2} = As^2e^{st}$

2. Re-write $\frac{d^2i(t)}{dt^2} + \frac{R}{L}\frac{di(t)}{dt} + \frac{1}{LC}i(t) = 0$ as:

$$\frac{d^2i(t)}{dt^2} + 2\alpha\frac{di(t)}{dt} + \omega_0^2 i(t) = 0$$

where $\alpha = \frac{1}{2}\frac{R}{L}$ and $\omega_0 = \sqrt{\frac{1}{LC}}$

3. <u>Characteristic Equation</u>: $s^2 + 2\alpha s + {\omega_0}^2 = 0$

4. <u>The Solutions to the Characteristic Equation</u>:

$$s_{1,2} = \frac{-2\alpha \pm \sqrt{4\alpha^2 - 4\omega_0^2}}{2} = -\alpha \pm \sqrt{\alpha^2 - \omega_0^2}$$

Second Order Circuits → Applying the General Solution to Our KVL → The Meaning

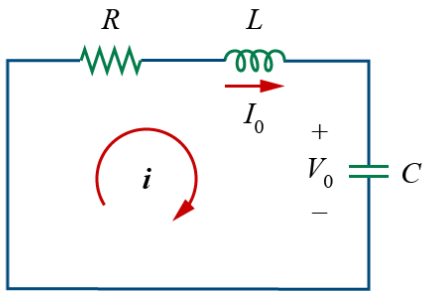

$$\frac{d^2 i(t)}{dt^2} + \frac{R}{L}\frac{di(t)}{dt} + \frac{1}{LC} i(t) = 0$$

$$i(t) = Ae^{st}$$

$$s_{1,2} = -\alpha \pm \sqrt{\alpha^2 - \omega_0^2}$$

Three possible responses for the ***RLC*** circuit:

1. If $\boldsymbol{\alpha > \omega_o}$, we have an overdamped case:

   $\boxed{i(t) = A_1 e^{s_1 t} + A_2 e^{s_2 t}}$ where $\boxed{s_{1,2} = -\alpha \pm \sqrt{\alpha^2 - \omega_0^2}}$

2. If $\boldsymbol{\alpha = \omega_o}$, we have the critically damped case:

   $\boxed{i(t) = (A_1 + A_2 t)e^{-\alpha t}}$ where $\boxed{s_{1,2} = -\alpha}$

3. If $\boldsymbol{\alpha < \omega_o}$, we have the underdamped case:

   $\boxed{s_{1,2} = -\alpha \pm j\sqrt{\omega_0^2 - \alpha^2} = -\alpha \pm j\omega_d}$ where $\boxed{\omega_d = \sqrt{\omega_0^2 - \alpha^2}}$

   $$i(t) = e^{-\alpha t}(B_1 \cos \omega_d t + B_2 \sin \omega_d t)$$

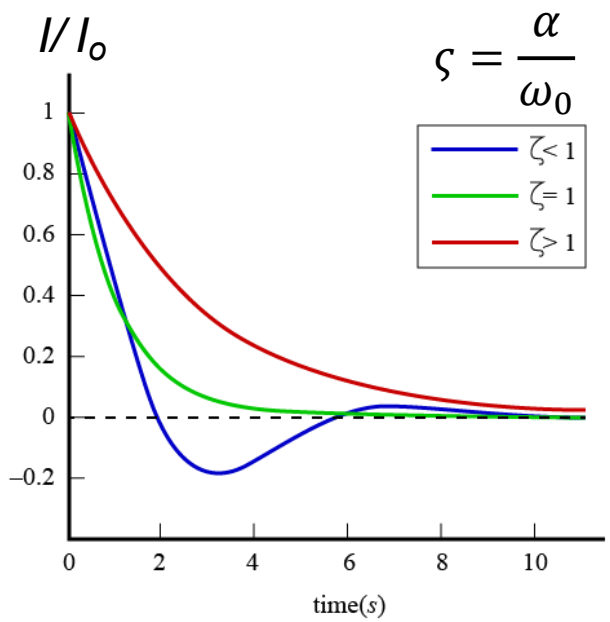

Second Order Circuits → Applying the General Solution to Our KVL → The Meaning

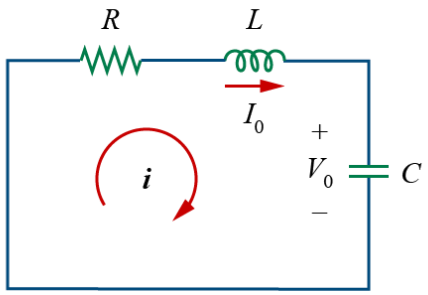

$$\frac{d^2 i(t)}{dt^2} + \frac{R}{L}\frac{di(t)}{dt} + \frac{1}{LC} i(t) = 0$$

$$i(t) = Ae^{st}$$

$$s_{1,2} = -\alpha \pm \sqrt{\alpha^2 - \omega_0^2}$$

To find the coefficients in the solutions,

the initials ***v***(0) [or ***i***(0)] and ***dv***(0)/***dt*** [or ***di***(0)/***dt***] are required.

NOTE:

1. At ***t*** **=** 0, time instant of switching (or change in circuit)
   - Voltage across capacitor cannot change abruptly:

     $v_C(0^-) = v_C(0) = v_C(0^+)$
   - Current through inductor cannot change abruptly:

     $i_L(0^-) = i_L(0) = i_L(0^+)$

2. At ***t*** **=** 0^-, which usually corresponds to the steady state of the circuit before switching:
   - A capacitor acts like an open circuit to a DC voltage.
   - An inductor acts as a short circuit to a DC current.

Source Free Parallel RLC → Similar to the Series RLC Seen Before

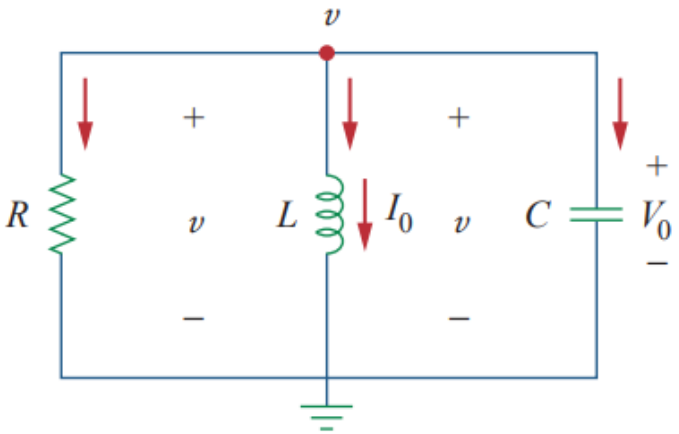

Let $i(0) = I_0$ and $v(0) = V_0$.

Apply KCL to the top node:

$$\frac{v}{R} + \frac{1}{L}\int_0^t v\,dt + v(0) + C\frac{dv}{dt} = 0$$

Taking the derivative with respect to t & divide by C

$$\frac{d^2v}{dt^2} + \frac{1}{RC}\frac{dv}{dt} + \frac{1}{LC}v = 0$$

https://tenor.com/search/did-you-forget-about-me-gifs

$$\frac{d^2v}{dt^2} + 2\alpha\frac{dv}{dt} + \omega_0^2 v = 0, \qquad \text{where } \alpha = \frac{1}{2}\frac{1}{RC} \text{ and } \omega_0 = \sqrt{\frac{1}{LC}}$$

Source Free Parallel RLC → Similar to the Series RLC Seen Before

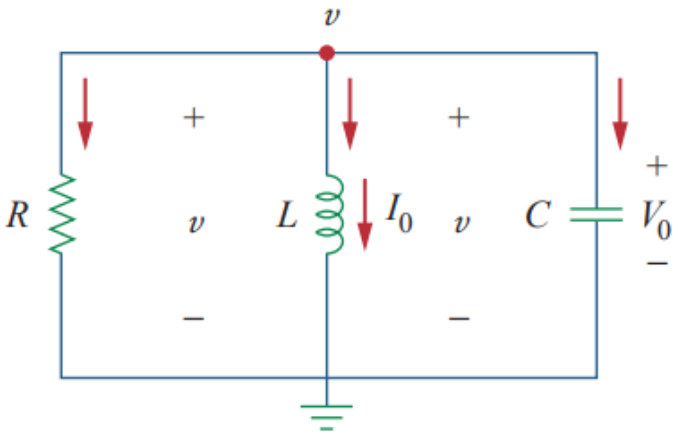

$$v(t) = Ae^{st}$$

$$s_{1,2} = -\alpha \pm \sqrt{\alpha^2 - \omega_0^2}$$

$$\frac{d^2v}{dt^2} + 2\alpha\frac{dv}{dt} + \omega_0^2 v = 0, \qquad \text{where } \alpha = \frac{1}{2RC} \text{ and } \omega_0 = \sqrt{\frac{1}{RC}}$$

The characteristic equation → $s^2 + 2\alpha s + \omega_0^2 = 0$

1. If $\alpha > \omega_0$, we have the overdamped case:

   $\boxed{v(t) = A_1 e^{-s_1 t} + A_2 e^{-s_2 t}}$ where $\boxed{s_{1,2} = -\alpha \pm \sqrt{\alpha^2 - \omega_0^2}}$

2. If $\alpha = \omega_0$, we have the critical damped case:

   $\boxed{v(t) = (A_1 + A_2 t)e^{-at}}$ where $\boxed{s_{1,2} = -\alpha}$

3. If $\alpha < \omega_0$, we have the underdamped case:

   $\boxed{s_{1,2} = -\alpha \pm j\sqrt{\omega_0^2 - \alpha^2} = -\alpha \pm j\omega_d}$ where $\omega_d = \sqrt{\omega_0^2 - \alpha^2}$

   $\boxed{v(t) = e^{-at}(B_1 \cos \omega_d t + B_2 \sin \omega_d t)}$

Step Response → Non-Homogeneous Differential Equation

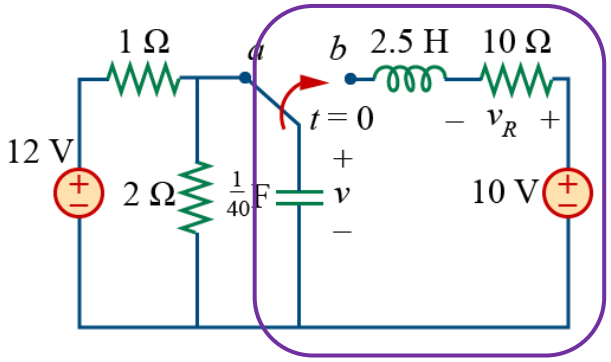

"Example 5"

$$Ri + L\frac{di}{dt} + v = v_s$$

$$where\ i = C\frac{dv}{dt}$$

$$RC\frac{dv}{dt} + LC\frac{d^2v}{dt^2} + v = \boxed{v_s}$$

$$\frac{d^2v}{dt^2} + \frac{R}{L}\frac{dv}{dt} + \frac{v}{LC} = \frac{v_s}{LC}$$

Almost the same as the equation for source-free series ***RLC*** circuit:

$$\frac{d^2v}{dt^2} + 2\alpha\frac{dv}{dt} + \omega_0^2 v = \frac{v_s}{LC}$$

And the same coefficients (important in determining the parameters $\boldsymbol{\alpha}$ and $\boldsymbol{\omega_o}$).

$$\alpha = \frac{1}{2}\frac{R}{L} \quad \text{and} \quad \omega_o = \sqrt{\frac{1}{LC}}$$

Step Response → Non-Homogeneous Differential Equation

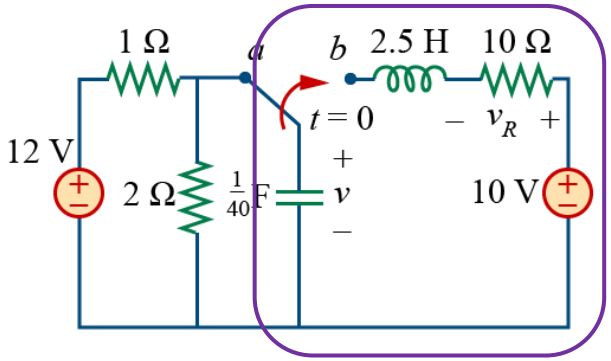

"Example 5"

$$\frac{d^2v}{dt^2} + 2\alpha\frac{dv}{dt} + \omega_0^2 v = \frac{v_s}{LC}$$

$$\alpha = \frac{1}{2}\frac{R}{L} \quad \text{and} \quad \omega_o = \sqrt{\frac{1}{LC}}$$

1. The solution has two components:

   1) the transient (source-free) response $v_t(t)$ and 2) the steady-state response $v_{ss}(t)$:

$$\boxed{v(t) = v_t(t) + v_{ss}(t)}$$

2. The transient response v_t is the same as that for source-free case,

$$s^2 + 2\alpha s + \omega_0^2 = 0$$

$$\boxed{v(t) = A_1 e^{-s_1 t} + A_2 e^{-s_2 t}} \qquad \text{(overdamped)}$$

$$\boxed{v(t) = (A_1 + A_2 t)e^{-at}} \qquad \text{(critically damped)}$$

$$\boxed{v_t(t) = e^{-at}(A_1 \cos\omega_d t + A_2 \sin\omega_d t)} \qquad \text{(underdamped)}$$

*The values of A_1 and A_2 are obtained from the initial conditions:

$$v(0) = \frac{dv(0)}{dt}$$

3. The steady-state response is the final value of $v(t)$:

$$v_{ss}(t) = v(\infty)$$

Step Response with Parallel RLC

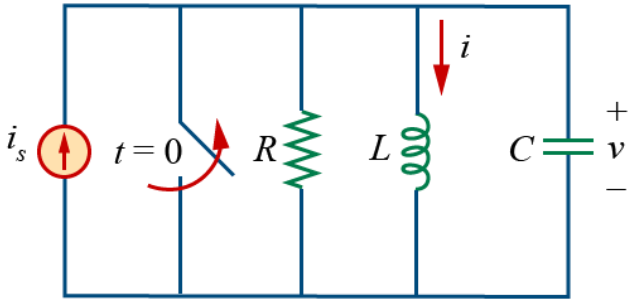

Not all that different from before:

$$\frac{v}{R} + i + C\frac{dv}{dt} = I_s \qquad v = L\frac{di}{dt}$$

$$\frac{L}{R}\frac{di}{dt} + i + LC\frac{d^2v}{dt^2} = I_s \qquad \boxed{\frac{d^2i}{dt^2} + \frac{1}{RC}\frac{di}{dt} + \frac{i}{LC} = \frac{I_s}{LC}}$$

It has the same form as the equation for source-free parallel $\boldsymbol{RLC}$ circuit:

$\boxed{\frac{d^2i}{dt^2} + 2\alpha\frac{di}{dt} + \omega_0^2 i = \frac{I_s}{LC}}$ where $\alpha = \frac{1}{2}\frac{1}{RC}$ and $\omega_0 = \sqrt{\frac{1}{LC}}$

Step Response with Parallel RLC

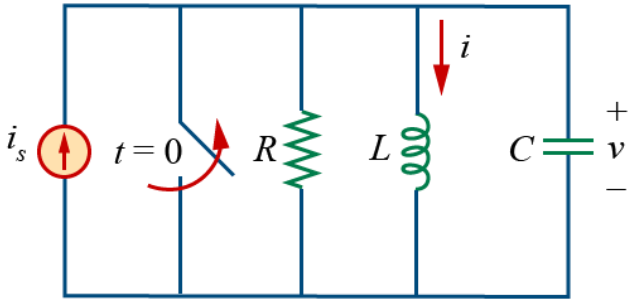

$$\frac{d^2 i}{dt^2} + \frac{1}{RC}\frac{di}{dt} + \frac{i}{LC} = \frac{I_s}{LC}$$

1. Again, the transient (source-free) response $i_t(t)$ and the steady-state response $i_{ss}(t)$:

$$\boxed{i(t) = i_t(t) + i_{ss}(t)}$$

2. The transient response i_t is the same as that for source-free case,

$$s^2 + 2\alpha s + \omega_0^2 = 0$$

$$\boxed{i(t) = A_1 e^{s_1 t} + A_2 e^{s_2 t}} \quad \text{(overdamped)}$$

$$\boxed{i(t) = (A_1 + A_2 t)e^{-at}} \quad \text{(critically damped)}$$

$$\boxed{i_t(t) = e^{-at}(A_1 \cos \omega_d t + A_2 \sin \omega_d t)} \quad \text{(underdamped)}$$

*The steady-state response is the final value of $i(t)$:

$$i_{ss}(t) = i(\infty) = I_s$$

3. The values of A_1 and A_2 are obtained from the initial conditions:

$$i(0) \text{ and } di(0)/dt$$

Summary of Source-Free RLC Circuits

1. Set up the characteristic equation for the circuit: $s^2 + 2\alpha s + \omega_0^2 = 0$

2. Find $\alpha = \frac{1}{2RC}$; $\omega_0 = \frac{1}{\sqrt{LC}}$ or $\alpha = \frac{R}{2L}$; $\omega_0 = \frac{1}{\sqrt{LC}}$

   For parallel $\boldsymbol{RLC}$ circuit For series $\boldsymbol{RLC}$ circuit

3. Decide the form of the response (based on the characteristic roots)

   3-1) $\omega_0^2 < \alpha^2$ → $s_{1,2} = -\alpha \pm \sqrt{\alpha^2 - \omega_0^2}$

   3-2) $\omega_0^2 = \alpha^2$ → $s_{1,2} = -\alpha$

   3-3) $\omega_0^2 > \alpha^2$ → $s_{1,2} = -\alpha \pm j\omega_d$, $\omega_d = \sqrt{\omega_0^2 - \alpha^2}$, $x = B_1 e^{-\alpha t}\cos\omega_d t + B_2 e^{-\alpha t}\sin\omega_d t$

4. Calculate initial values $v_C(0^+)$ and $dv_C(0^+)/dt$ or $i_L(0^+)$ and $di_L(0^+)/dt$.

5. Find the parameters A_1 and A_2, or B_1 and B_2.

Summary of RLC Circuits with Sources

1. Two-component-solution:

the transient (source-free) response $x_t(t)$ and the steady-state response $x_{ss}(t)$:

$$x(t) = x_t(t) + x_{ss}(t)$$

2. The transient response x_t is the same as that for source-free case.

3. The steady-state response is the final value of $x(t)$:

$$x_{ss}(t) = x(\infty)$$

4. Calculate initial values $v_C(0^+)$ and $dv_C(0^+)/dt$ or $i_L(0^+)$ and $di_L(0^+)/dt$.

5. Find the parameters A_1 and A_2, or B_1 and B_2.

A Side Note

These types of differential equations & “depictions” are rather common:

Ex) Black-Scholes Equation (used in finance)

$$\frac{\partial V}{\partial t} + \frac{1}{2}\sigma^2 S^2 \frac{\partial^2 V}{\partial S^2} = rV - rS\frac{\partial V}{\partial S}$$

https://en.wikipedia.org/wiki/Black%E2%80%93Scholes_equation

Laplace Transform

- Second Order Circuits
- **Laplace Transform**

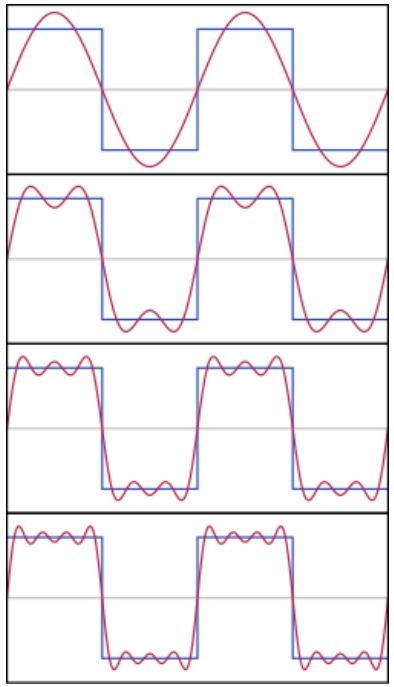

https://en.wikipedia.org/wiki/Fourier_series

Laplace Transform

1) We typically deal with ”signals” in the time domain, but it can be easier/informative to work in the frequency domain → this enables **turning differential equations into <u>algebraic equations</u>.**
   a) Initial charges (initial conditions) on capacitors and inductors can be easily incorporated.
   b) The total response (natural + forced) in a single calculation.
2) Laplace Transform enables this ”switching’ between time domain (***f(t)***) and frequency domain (***F(s)***).
3) You can think of the transformation as a pattern matching (between known Laplace Transform pairs).

TIME DOMAIN ⟷ FREQUENCY DOMAIN

$$F(s) = \int_0^{\infty} f(t)\, e^{-st} dt \quad \& \quad f(t) = \frac{1}{2\pi j}\int_{-\infty}^{\infty} F(s) e^{st} ds \quad where\ s = \sigma + j\omega$$

Laplace Transform

4) Lower limit 0^- in LT equation is used to indicate a time just before $t = 0$. The idea is to capture singularity functions (which may be discontinuous) at $t = 0$ (thus including initial conditions).

5) Since $f(t)$ is ignored for $t < 0$, the LT is also known as the unilateral (one-sided) transform.

6) Functions $\boldsymbol{f(t) \Leftrightarrow F(s)}$ are called LT pair.

$$F(s) = \int_0^\infty f(t)\, e^{-st} dt \quad \& \quad f(t) = \frac{1}{2\pi j}\int_{-\infty}^{\infty} F(s) e^{st} ds \quad where\ s = \sigma + j\omega$$

Example 8 – Laplace Transform Basics

School of Electrical and Electronic Engineering
College of Engineering
Prof. Sunwoo Lee
Last Modified: 20260209

Determine the Laplace transform of each of the following functions shown below.

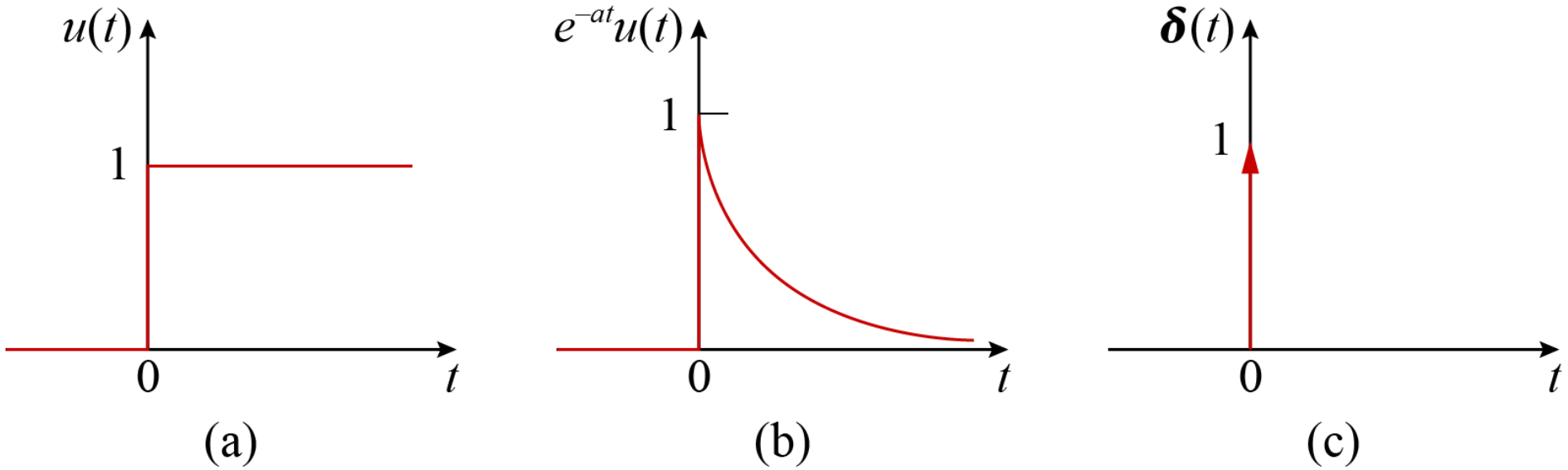

Example 8 – Laplace Transform Basics

School of Electrical and Electronic Engineering
College of Engineering
Prof. Sunwoo Lee
Last Modified: 20260209

a) The Laplace transform of unit step, $u(t)$, is given by:

$$L[u(t)] = \int_0^\infty 1e^{-st}\,dt = -\frac{1}{s}e^{-st}\Big|_0^\infty = \frac{1}{s}$$

Example 8 – Laplace Transform Basics

School of Electrical and Electronic Engineering
College of Engineering
Prof. Sunwoo Lee
Last Modified: 20260209

b) The Laplace transform of exponential function, $e^{-at}u(t)$, $a > 0$ is given by:

$$L[e^{-at}u(t)] = \int_0^\infty e^{-at}e^{-st}\,dt = -\frac{1}{a+s}e^{-(a+s)t}\Big|_0^\infty = \frac{1}{s+a}$$

Example 8 – Laplace Transform Basics

School of Electrical and Electronic Engineering
College of Engineering
Prof. Sunwoo Lee
Last Modified: 20260209

c) The Laplace transform of impulse function, $\delta(t)$, is given by:

$$L[\delta(t)] = \int_0^\infty \delta(t)e^{-st}\,dt = e^{-0} = 1$$

Laplace Transform – Step-by-Step Guide

1) Transform the circuit from the time-domain to the frequency-domain.
2) Obtain the solution of algebraic equations in the frequency-domain.
3) Finally, apply the inverse LT to the frequency-domain results to obtain the solution in the time-domain.

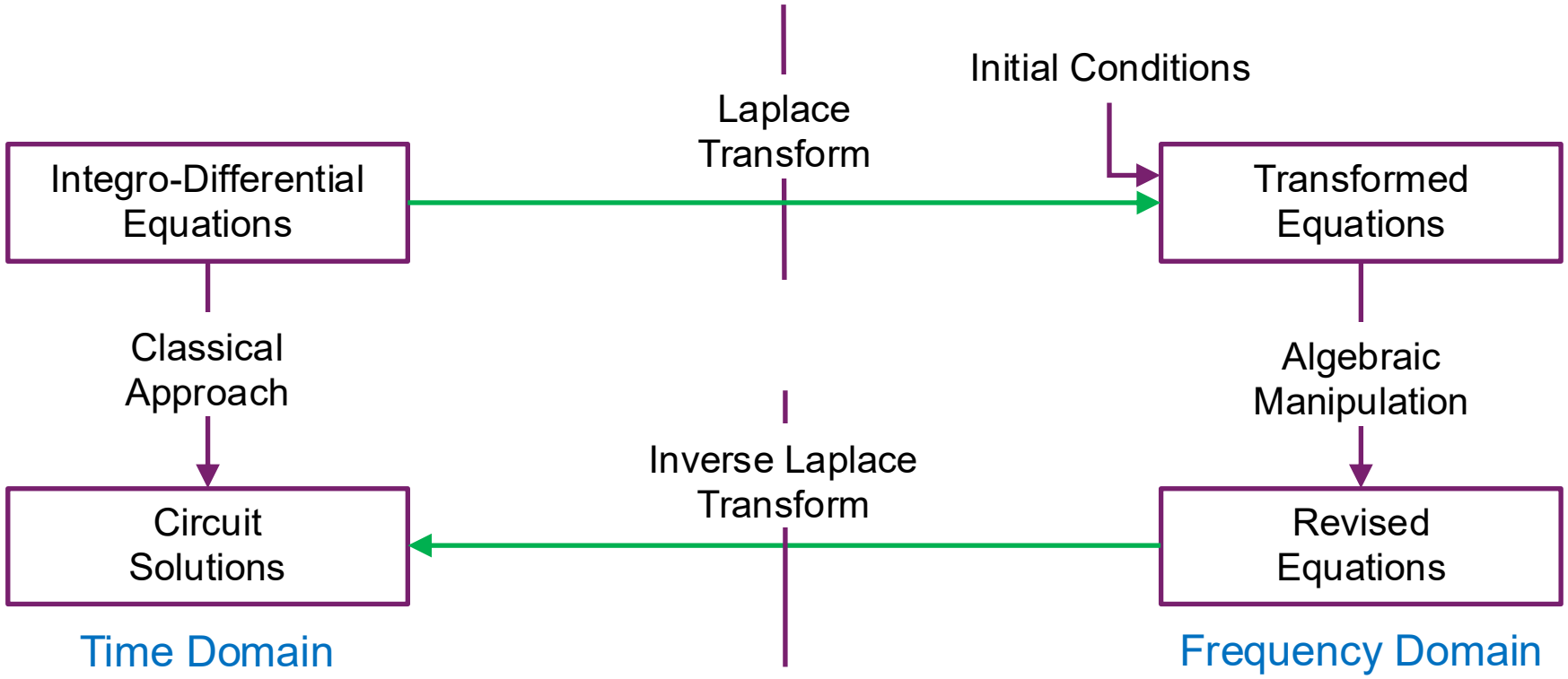

Properties of Laplace Transform

1. Linearity

$$L[a_1 f_1(t) + a_2 f_2(t)] = a_1 F_1(s) + a_2 F_2(s)$$

2. Scaling

$$L[f(at)] = \frac{1}{a} F\left(\frac{s}{a}\right)$$

3. Time Shift

$$L[f(t-a)u(t-a)] = e^{-as} F(s)$$

4. Frequency Shift

$$L[e^{-at} f(t) u(t)] = F(s+a)$$

$$L[\sin(\omega t)\, u(t)] = L\left[\frac{1}{2j}\left(e^{j\omega t} - e^{-j\omega t}\right) u(t)\right]$$

$$= \frac{1}{2j}\int_{0^-}^{\infty}\left(e^{j\omega t}\right) e^{-st}\, dt - \frac{1}{2j}\int_{0^-}^{\infty}\left(e^{-j\omega t}\right) e^{-st}\, dt = \frac{1}{2j}\left[\frac{1}{s-j\omega} - \frac{1}{s+j\omega}\right] = \frac{\omega}{s^2+\omega^2}$$

$$L[\sin(\omega t)\, u(t)] = \frac{\omega}{s^2+\omega^2} \qquad L[\sin(2\omega t)\, u(t)] = \frac{1}{2}\frac{\omega}{\left(\frac{s}{2}\right)^2 + \omega^2}$$

$$L[\cos(\omega t)\, u(t)] = \frac{s}{s^2+\omega^2} \qquad L\left[\cos\left(\omega(t-a)\right) u(t-a)\right] = e^{-as}\frac{s}{s^2+\omega^2}$$

$$L[e^{-at}\cos(\omega t)\, u(t)] = \frac{s+a}{(s+a)^2+\omega^2} \qquad F(s) = L[\cos(\omega t)\, u(t)] = \frac{s}{s^2+\omega^2}$$

Properties of Laplace Transform

5. Time Differentiation

$$L\left[\frac{df}{dt}u(t)\right] = sF(s) - f(0^-)$$

If $F(s) = L[\sin(\omega t)\,u(t)] = \frac{\omega}{s^2+\omega^2}$

$$L\left[\frac{d}{dt}\sin(\omega t)u(t)\right] = \left[s\frac{\omega}{s^2+\omega^2} - \sin(0)\right] = \frac{s\,\omega}{s^2+\omega^2}$$

6. Time Integration

$$L\left[\int_0^t f(t)\,dt\right] = \frac{1}{s}F(s)$$

$$L[u(t)] = \frac{1}{s} \qquad L[t\,u(t)] = L\left[\int_0^t 1\,u(t)\,dt\right] = \frac{1}{s}\frac{1}{s} = \frac{1}{s^2}$$

$$\int_0^t 1\,u(t)\,dt = t\,u(t)$$

$$L[t^n] = \frac{n!}{s^{n+1}}$$

7. Frequency Differentiation

$$L[tf(t)] = -\frac{dF(s)}{ds}$$

$$L[te^{-at}u(t)] = -\frac{d}{ds}\frac{1}{(s+a)} = \frac{1}{(s+a)^2} \qquad \text{where } L[e^{-at}u(t)] = \frac{1}{s+a}$$

Properties of Laplace Transform

8. Initial & Final Conditions

Directly from its Laplace transform $F(s)$.

Initial-value theorem: $\boxed{f(0) = \lim_{s\to\infty} sF(s)}$

Final-value theorem: $\boxed{f(\infty) = \lim_{s\to 0} sF(s)}$

If ***f*(*t*)** has a finite limit as ***t*** tends to ∞, then

$$L\left\{\frac{df(t)}{dt}\right\} = \int_0^\infty e^{-st}\frac{df(t)}{dt}dt = -f(0) + s\cdot F(s)$$

$$\rightarrow \lim_{s\to\infty}\int_0^\infty e^{-st}\frac{df(t)}{dt}dt = 0 = \lim_{s\to\infty}[-f(0) + s\cdot F(s)]$$

$$\rightarrow f(0) = \lim_{s\to\infty}[s\cdot F(s)]$$

$$\lim_{s\to 0}\int_0^\infty e^{-st}\frac{df(t)}{dt}dt = \lim_{s\to 0}[-f(0) + s\cdot F(s)]$$

$$\rightarrow \int_0^\infty \frac{df(t)}{dt}dt = \lim_{s\to 0}[-f(0) + s\cdot F(s)]$$

$$\rightarrow f(\infty) - f(0) = \lim_{s\to 0}[-f(0) + s\cdot F(s)]$$

$$\rightarrow f(\infty) = \lim_{s\to 0}[s\cdot F(s)]$$

Ex) $f(t) = e^{-at}\cos(\omega t)u(t)$

$$L[e^{-at}\cos(\omega t)\,u(t)] = \frac{s+a}{(s+a)^2+\omega^2}$$

$$f(\infty) = \lim_{s\to 0} sF(s) = \lim_{s\to 0} s\frac{s+a}{(s+a)^2+\omega^2} = 0, \quad \text{if } a > 0$$

Laplace Transforms Summary

	$f(t)$	$F(s)$
Unit impulse	$\delta(t)$	1
Unit step	$u(t)$	$\frac{1}{s}$
Exponential	e^{-at}	$\frac{1}{s+a}$
Unit ramp	t	$\frac{1}{s^2}$
Polynomial	t^n	$\frac{n!}{s^{n+1}}$
Multiplicative	te^{-at}	$\frac{1}{(s+a)^2}$
Polynomial	$t^n e^{-at}$	$\frac{n!}{(s+a)^{n+1}}$
Sine	$\sin \omega t$	$\frac{\omega}{s^2+\omega^2}$
Cosine	$\cos \omega t$	$\frac{s}{s^2+\omega^2}$
Sine	$\sin(\omega t+\theta)$	$\frac{s\sin\theta+\omega\cos\theta}{s^2+\omega^2}$
Cosine	$\cos(\omega t+\theta)$	$\frac{s\sin\theta-\omega\cos\theta}{s^2+\omega^2}$
Damped sine	$e^{-at}\sin \omega t$	$\frac{\omega}{(s+a)^2+\omega^2}$
Damped cosine	$e^{-at}\cos \omega t$	$\frac{s+a}{(s+a)^2+\omega^2}$
	* Defined for $t \geq 0, f(t) = 0$ for $t < 0$.	

Laplace Transforms Tips – Poles & Zeros

If $F(s) = \frac{N(s)}{D(s)}$, then solutions of $N(s) = 0$ are called zeros of $F(s)$, and solutions of $D(s) = 0$ are called poles of $F(s)$.

- Order of numerator ≥ Order of denominator

  Use long division to obtain

$$F(s) = \frac{N(s)}{D(s)} = Q(s) + \frac{R(s)}{D(s)}$$

  where the degree of $R(s)$ is less than the degree of $D(s)$

- Order of numerator < Order of denominator

Laplace Transforms Tips – Simple Real Poles

Suppose $F(s)$ has the general form of

$$F(s) = \frac{\text{numerator polynomial}}{\text{denominator polynomial}} = \frac{N(s)}{D(s)}$$

Then finding the inverse Laplace transform of $F(s)$ involves two steps:

1. Decompose $F(s)$ into simple terms using partial fraction expansion.
2. Find the inverse of each term by matching entries in the Laplace transform table.

$$F(s) = \frac{N(s)}{(s+p_1)(s+p_2)\dots(s+p_N)}$$

$$\rightarrow F(s) = \frac{k_1}{s+p_1} + \frac{k_s}{s+p_s} + \cdots + \frac{k_n}{s+p_n} \; where \; k_i = (s+p_i)F(s)\Big|_{s=-p_i}$$

$$\Longrightarrow f(t) = (k_1 e^{-p_1 t} + k_2 e^{-p_2 t} + \cdots + k_n e^{-p_n t})u(t)$$

Laplace Transforms Tips – "Repeated" Real Poles

If $F(s)$ contains n repeated poles at $s = -p$, then in its partial fraction expansion, there will be the following n terms:

$$F(s) = \cdots + \frac{k_n}{(s+p)^n} + \frac{k_{n-1}}{(s+p)^{n-1}} + \cdots + \frac{k_1}{s+p} + \cdots$$

$$k_i = \frac{1}{(n-i)!}\frac{d^{n-i}}{ds^{n-i}}\left[(s+p)^n F(s)\right]\Big|_{s=-p}$$

Then corresponding these n terms, $f(t)$ contains:

$$f(t) = \left(\ldots + k_n \frac{t^{n-1}}{(n-1)!}e^{-pt} + k_{n-1}\frac{t^{n-2}}{(n-2)!}e^{-pt} + \cdots + k_1 e^{-pt} + \cdots\right)u(t)$$

Laplace Transforms Tips – Distinct Complex Poles

Suppose $F(s)$ contains one pair of simple complex conjugate poles at $s = -\alpha \pm j\beta$.

Then its denominator contains a quadratic

factor $(s + \alpha)^2 + \beta^2$.

$$F(s) = \frac{A_1 s + A_2}{(s+\alpha)^2 + \beta^2} + \cdots$$

$$= \frac{A_1(s+\alpha)}{(s+\alpha)^2 + \beta^2} + \frac{A_2 - A_1\alpha}{(s+\alpha)^2 + \beta^2}$$

Then corresponding to these two terms, $f(t)$ contains

$$f(t) = [A_1 e^{-\alpha t}\cos\beta t + B_1 e^{-\alpha t}\sin\beta t]u(t) + \cdots$$

$$B_1 = \frac{A_s - A_1\alpha}{\beta}$$

Laplace Transform – Step-by-Step Guide, Revisited
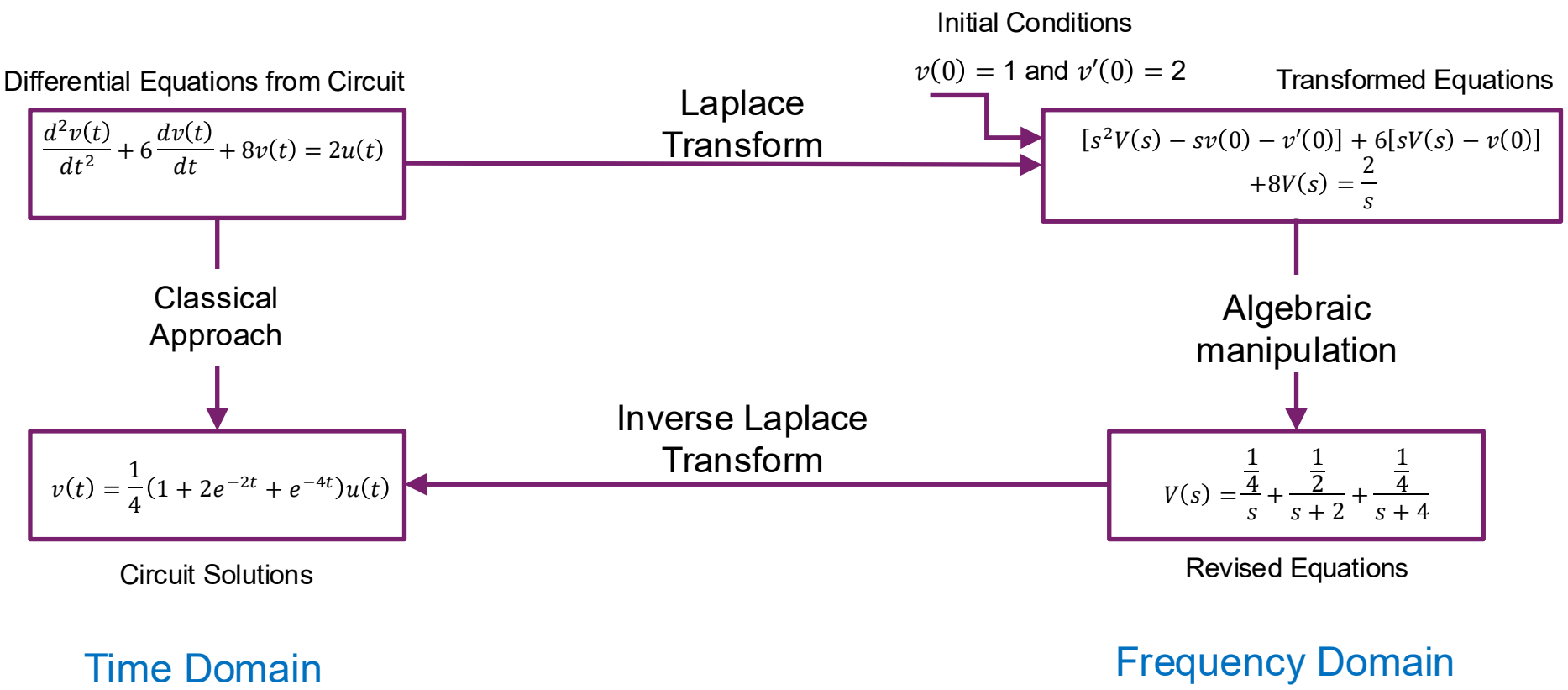
1) Transform the circuit from the time-domain to the frequency-domain.
2) Obtain the solution of algebraic equations in the frequency-domain.
3) Finally, apply the inverse LT to the frequency-domain results to obtain the solution in the time-domain.