EE2101 Circuit Analysis

Lecture 6

School of Electrical and Electronic Engineering
College of Engineering
Prof. Sunwoo Lee
Last Modified: 20260213

HOUSEKEEPING

- *Quiz 2 on 23 February 2026 (Monday)*
  - ***Time**: During Lecture 7 (after 20 minutes of our last lecture)*
  - ***Location**: Exam Hall C (same as the Quiz 1)*
  - ***Topics**: Everything up to WEEK 6 (cumulative, and including LECTURE 6 and TUTORIAL 6)*
  - ***Methods**: NTULearn with Lockdown Browser – 40 Minutes*
  - ***Provided**: A blank sheet of paper is provided and likely will be needed*
  - ***Allowed**: Non-graphing calculator is allowed, but nothing else; closed book, phones turned off, etc.*
- *Don't forget about the lab & request a makeup ASAP if applicable.*
- *Autopsy Report for Quiz 1 (to recover up to 1/3 of the lost points) Due on* **19 FEB at 11:59 PM**

  → NO LATE SUBMISSIONS WILL BE ACCEPTED

EE2101 Circuit Analysis

Lecture 6

School of Electrical and Electronic Engineering
College of Engineering
Prof. Sunwoo Lee
Last Modified: 20260213

RECAP

- Capacitors and Inductors → First Order Circuits → Differential Equations
- "More" Capacitors and Inductors → Second Order Circuits → Differential Equations
- A function can be descried in <u>Time Domain</u> or in <u>Frequency Domain</u>
- Laplace Transform: Time Domain → Frequency Domain
- Inverse-Laplace Transform: Frequency Domain → Time Domain
- Why Laplace? Why Frequency Domain? Some "maths" are easier in Frequency Domain

Review: Tutorial 6 Problem 1

Find the Laplace Transform of $\boldsymbol{f(t) = \frac{d}{dt}\left(2e^{-4t}\cos(2t)\right)}$

$$L\left\{\frac{d}{dt}(2e^{-4t}\cos(2t))\right\} = ?$$

Recall: $L\left\{\frac{dg(t)}{dt}\right\} = \int_0^\infty dt\, e^{-st}\frac{dg(t)}{dt} = -g(0) + s\cdot G(s)$

$$= -[2e^{-4t}\cdot\cos(2t)]_{t=0} + s\cdot G(s) \quad if\ we\ define\ g(t) = 2e^{-4t}\cos(2t)\ \&\ f(t) = \frac{d}{dt}g(t)$$

$$= -2 + s\cdot G(s) = -2 + 2s\cdot L\{\boldsymbol{e^{-4t}\cos(2t)}\}$$

$$= -2 + s\cdot G(s) = -2 + 2s\cdot \int_0^\infty e^{-st}\boldsymbol{e^{-4t}\cos(2t)}\,dt$$

$$= -2 + s\cdot G(s) = -2 + 2s\cdot \int_0^\infty e^{-(s+4)t}\cos(2t)\,dt$$

$$= -2 + s\cdot G(s) = -2 + 2s\cdot \int_0^\infty \boldsymbol{e^{-(s+4)t}}\cos(2t)\,dt$$

$$= -2 + s\cdot G(s) = -2 + 2s\cdot \frac{(s+4)}{(s+4)^2+2^2} = \frac{-2((s+4)^2+2^2)+2s(s+4)}{(s+4)^2+2^2} = \boxed{-\frac{8s+40}{(s+4)^2+4}}$$

Recall:

$$\cos(at) = \frac{e^{jat}+e^{-jat}}{2}$$

$$L\{\cos(at)\} = \frac{1}{2}L\{e^{jat}+e^{-jat}\} = \frac{s}{s^2+a^2}$$

$$L\{\cos(at)\}_{s\to s+4} = \frac{(s+4)}{(s+4)^2+a^2}$$

Example: Time-Domain Analysis vs. Laplace Domain Analysis

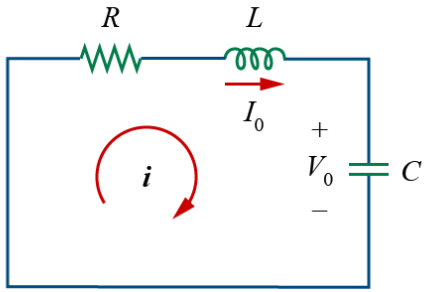

$$\frac{d^2 i(t)}{dt^2} + \frac{R}{L}\frac{di(t)}{dt} + \frac{1}{LC} i(t) = 0$$

$$i(t) = Ae^{st}$$

$$\frac{d^2 x}{dt^2} + a_1 \frac{dx}{dt} + a_0 x = 0$$

$$x(t) = Ae^{st}$$

Previously

$$s_1 = \frac{-a_1 + \boxed{\sqrt{{a_1}^2 - 4a_0}}}{2} \qquad s_2 = \frac{-a_1 - \boxed{\sqrt{{a_1}^2 - 4a_0}}}{2}$$

$(a_1^2 - 4a_0) > 0 \rightarrow$ Real and distinct roots $(s_1 = -\alpha_1,\ s_2 = -\alpha_2)$

$(a_1^2 - 4a_0) = 0 \rightarrow$ Real and equal roots $(s_{1,2} = -\alpha)$

$(a_1^2 - 4a_0) < 0 \rightarrow$ Complex roots $(s_{1,2} = -\alpha \pm j\omega_d)$

1) Real and distinct roots

Overdamped response: $x = A_1 e^{-\alpha_1 t} + A_2 e^{-\alpha_2 t}$

2) Equal (repeated) roots

Critically damped response: $x = D_1 e^{-\alpha t} + D_2 t e^{-\alpha t}$

Recall
extra "t" to obtain two unique equations

3) Complex roots

Underdamped response: $x = B_1 e^{-\alpha t}\cos\omega_d t + B_2 e^{-\alpha t}\sin\omega_d t$

Example: Time-Domain Analysis vs. Laplace Domain Analysis

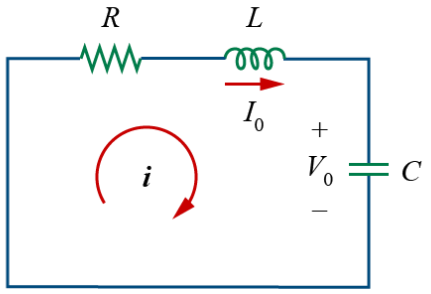

$$\frac{d^2 i(t)}{dt^2} + \frac{R}{L}\frac{di(t)}{dt} + \frac{1}{LC} i(t) = 0$$

$$i(t) = Ae^{st}$$

$$\frac{d^2 x}{dt^2} + a_1 \frac{dx}{dt} + a_0 x = 0$$

$$x(t) = Ae^{st}$$

Tutorial 6 Problem 3

Find v(t), given that $v(0) = 2, \frac{dv(0)}{dt} = 4, and\ \frac{d^2 v(t)}{dt^2} + 5\frac{dv(t)}{dt} + 6\,v(t) = 6e^{-t}u(t)$

Recall: $L\left\{\frac{df(t)}{dt}\right\} = \int_0^\infty dt\, e^{-st}\frac{df(t)}{dt} = -f(0) + s \cdot F(s) = \boxed{-f(0) + s \cdot L\{f(t)\}}$

Apply this "twice": $L\left\{\frac{d}{dt}\left(\frac{df(t)}{dt}\right)\right\} = -\frac{df(0)}{dt} + s \cdot L\left\{\frac{df(t)}{dt}\right\} = -\frac{df(0)}{dt} + s \cdot \left(-f(0) + s \cdot F(s)\right)$

$$= \boxed{-\frac{df(0)}{dt} - sf(0) + s^2 \cdot F(s)}$$

$$V(s) = \frac{2s^2 + 16s + 20}{(s+1)(s+2)(s+3)}$$

$$v(t) = [Ae^{-t} + Be^{-2t} + Ce^{-3t}]u(t)$$

Prof. Sunwoo Lee
Last Modified: 20260213

Topics Overview

- **Laplace Transform**
- **Circuit Analysis in Laplace Domain ("s-Domain")**

Prof. Sunwoo Lee
Last Modified: 20260213

Laplace Transform

- **Laplace Transform**
- **Circuit Analysis in Laplace Domain ("s-Domain")**

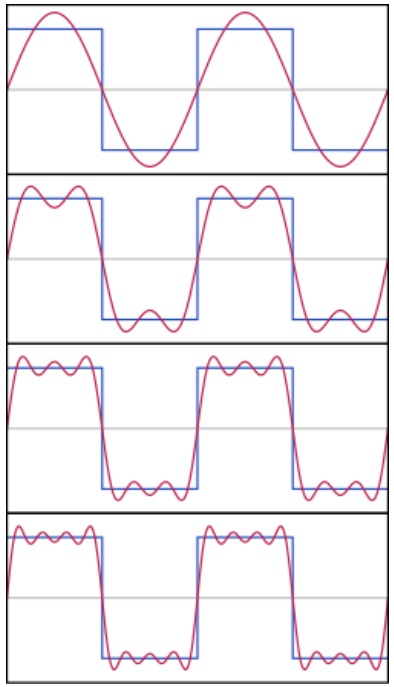

https://en.wikipedia.org/wiki/Fourier_series

Laplace Transform

TIME DOMAIN ⟷ FREQUENCY DOMAIN

$$F(s) = \int_0^{\infty} f(t)\, e^{-st} dt \quad \& \quad f(t) = \frac{1}{2\pi j} \int_{-\infty}^{\infty} F(s) e^{st} ds$$

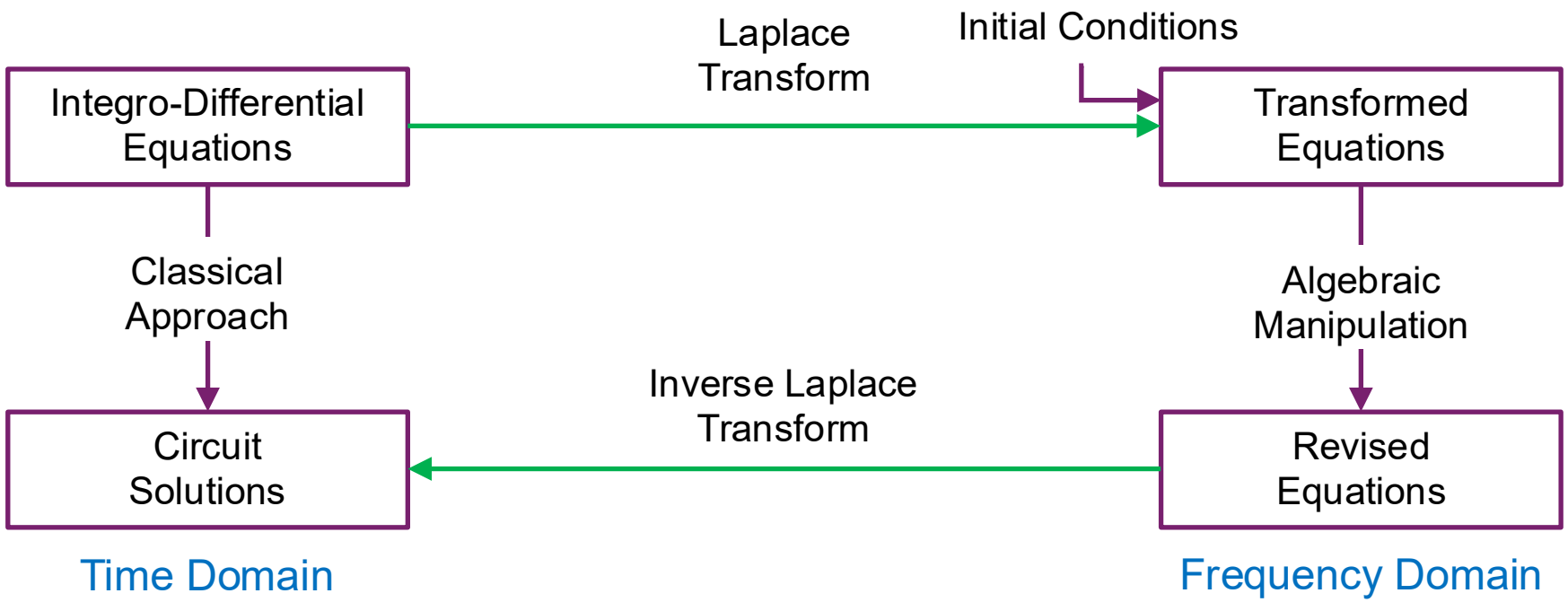

Poles & Zeros

For $F(s) = \frac{N(s)}{D(s)}$,

"s" that makes $N(s) = 0$ are called zeros of $F(s)$.

"s" that makes $D(s) = 0$ are called poles of $F(s)$.

- Case 1) Order of numerator ≥ Order of denominator → "unstable"

  Use long division to obtain

$$F(s) = \frac{N(s)}{D(s)} = Q(s) + \frac{R(s)}{D(s)}$$

- Case 2) Order of numerator < Order of denominator → we will see mostly this

"Order of numerator < Order of denominator" = More poles than zeros

Suppose $F(s)$ has the general form of

$$F(s) = \frac{\text{numerator polynomial}}{\text{denominator polynomial}} = \frac{N(s)}{D(s)}$$

Then finding the inverse Laplace transform of $F(s)$ involves two steps:

1. Decompose $F(s)$ into simple terms using partial fraction expansion.
2. Find the inverse of each term by matching entries in the Laplace transform table.

$$F(s) = \frac{N(s)}{(s+p_1)(s+p_2)\dots(s+p_N)}$$

$$\rightarrow F(s) = \frac{k_1}{s+p_1} + \frac{k_s}{s+p_s} + \cdots + \frac{k_n}{s+p_n} \; where \; k_i = (s+p_i)F(s)\Big|_{s=-p_i}$$

$$\Longrightarrow f(t) = (k_1 e^{-p_1 t} + k_2 e^{-p_2 t} + \cdots + k_n e^{-p_n t})u(t)$$

"Repeated" Real Poles

If $F(s)$ contains n repeated poles at $s = -p$, there will be the following n terms its partial fraction expansion:

$$F(s) = \cdots + \boxed{\frac{k_n}{(s+p)^n}} + \frac{k_{n-1}}{(s+p)^{n-1}} + \cdots + \frac{k_1}{s+p} + \cdots$$

$$k_i = \frac{1}{(n-i)!}\frac{d^{n-i}}{ds^{n-i}}\left[(s+p)^n F(s)\right]\Big|_{s=-p}$$

Then corresponding these n terms, $f(t)$ contains:

$$f(t) = \left(\ldots + \boxed{k_n \frac{t^{n-1}}{(n-1)!}e^{-pt}} + k_{n-1}\frac{t^{n-2}}{(n-2)!}e^{-pt} + \cdots + k_1 e^{-pt} + \cdots\right)u(t)$$

Complex Poles

Suppose $F(s)$ contains one pair of simple complex conjugate poles at $s = -\alpha \pm j\beta$.

Then its denominator contains a quadratic factor $(s + \alpha)^2 + \beta^2$ from $\left(s - (-\alpha \pm j\beta)\right)^2$

$$F(s) = \frac{A_1 s + A_2}{(s+\alpha)^2 + \beta^2} + \cdots$$

$$= \frac{A_1(s+\alpha)}{(s+\alpha)^2 + \beta^2} + \frac{A_2 - A_1\alpha}{(s+\alpha)^2 + \beta^2}$$

Then corresponding to these two terms, $f(t)$ contains

$$f(t) = [A_1 e^{-\alpha t}\cos\beta t + B_1 e^{-\alpha t}\sin\beta t]u(t) + \cdots$$

$$where\ B_1 = \frac{A_s - A_1\alpha}{\beta}$$

Laplace Transform – Step-by-Step Guide, Revisited, Once Again

1) Transform the circuit from the time-domain to the frequency-domain.
2) Obtain the solution of algebraic equations in the frequency-domain.
3) Finally, apply the inverse LT to the frequency-domain results to obtain the solution in the time-domain.

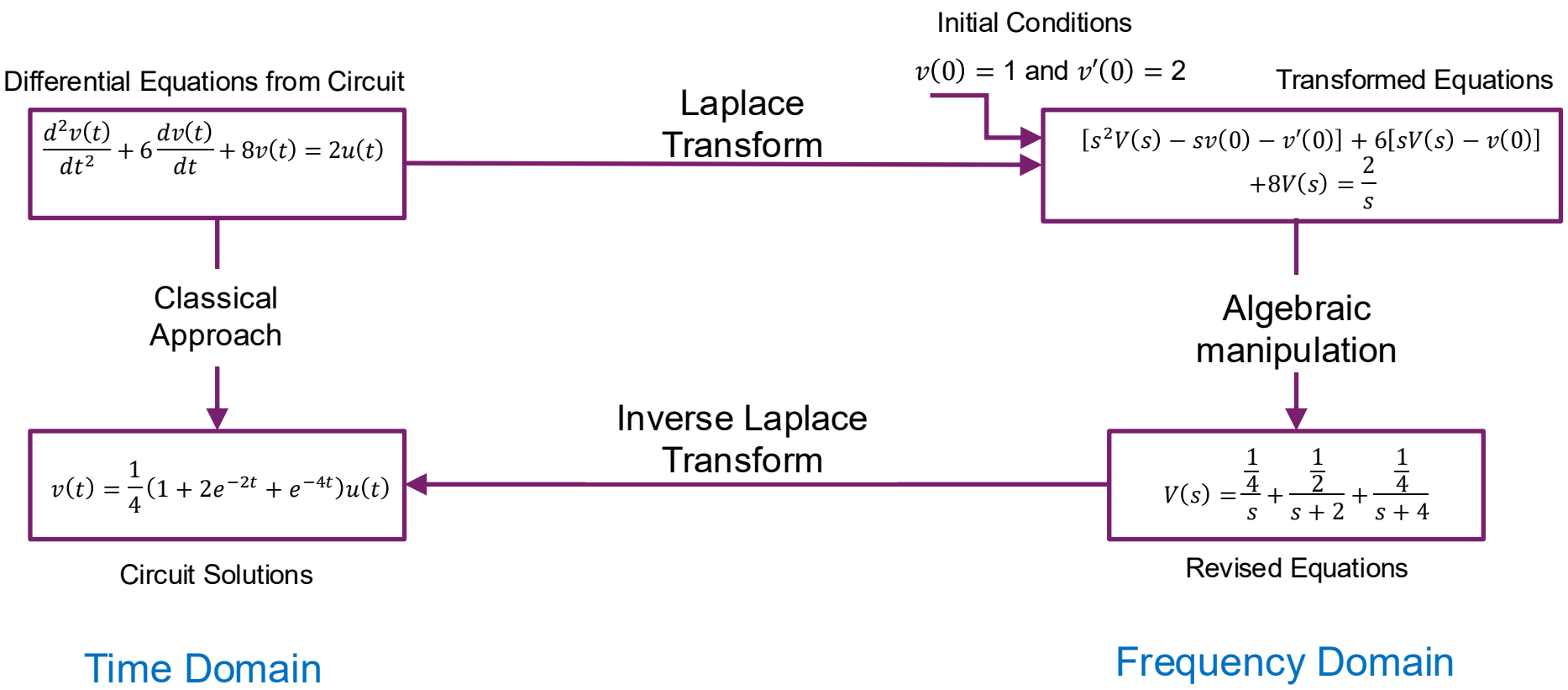

Prof. Sunwoo Lee
Last Modified: 20260213

Circuit Analysis in Laplace Domain ("s-Domain")

- Laplace Transform
- **Circuit Analysis in Laplace Domain ("s-Domain")**

Circuit Analysis in Laplace Domain ("s-Domain")

How to apply Laplace transform in circuit analysis?

1. Transform the circuit from the time domain to the s-domain.

2. Solve the circuit using nodal analysis, mesh analysis, source transformation, superposition, *etc.*

   *All the circuit theorems and relationships we learned are still valid in the s-domain.

3. Take the inverse transform of the solution and thus obtain the solution in the time domain.

Time Domain to s-Domain: Resistor

Time-domain

$v(t) = Ri(t)$

s-domain

$V(s) = RI(s)$

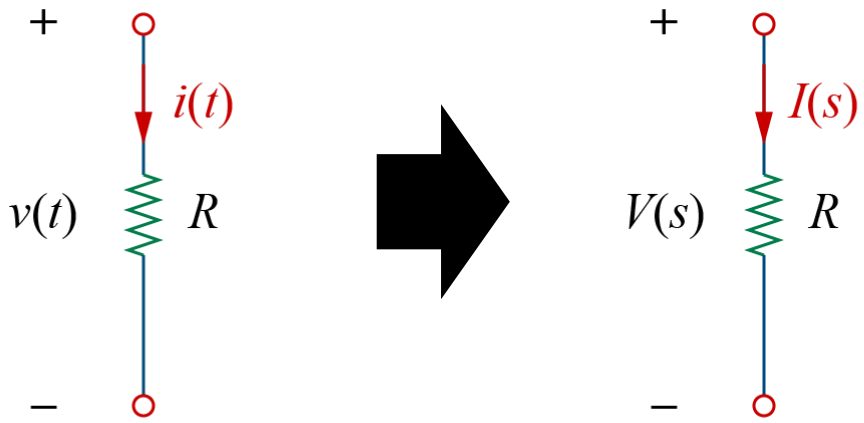

Time Domain to s-Domain: Inductor

Time-domain

$$v(t) = L\frac{di(t)}{dt}$$

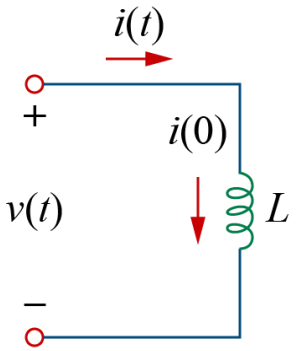

s-domain

$$V(s) = L[sI(s) - i(0^-)] = sLI(s) - Li(0^-)$$

$V_1 \quad + \quad V_0$

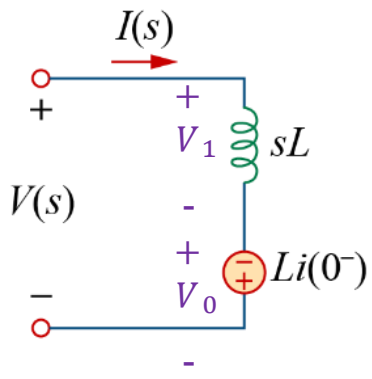

or $I(s) = \frac{1}{sL}V(s) + \frac{i(0^-)}{s}$

$I_1 \quad + \quad I_0$

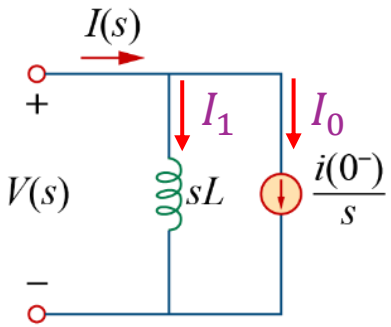

Time Domain to s-Domain: Capacitor

Time-domain

$$i(t) = C\frac{dv(t)}{dt}$$

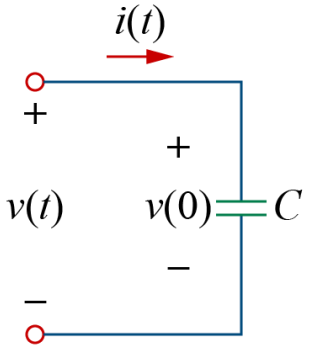

s-domain

$$I(s) = sCV(s) - Cv(0^-)$$

$$I_1 \quad + \quad I_0$$

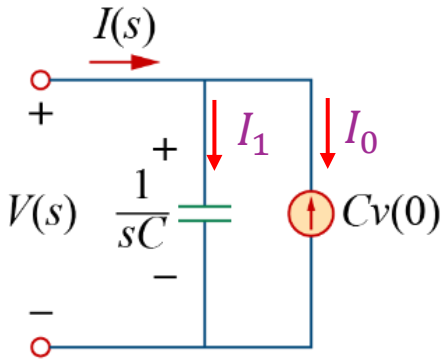

or $$V(s) = \frac{1}{sC}I(s) + \frac{v(0^-)}{s}$$

$$V_1 \quad + \quad V_0$$

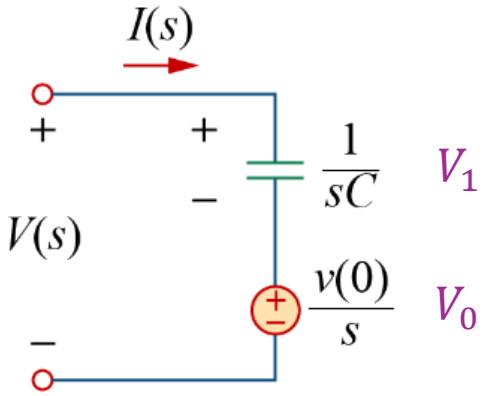

Zero Initial Conditions

Assuming zero initial condition for the inductor and capacitor:

Resistor: $V(s) = I(s)\ R$

Inductor: $V(s) = I(s)\ sL$

Capacitor: $V(s) = I(s)/sC$

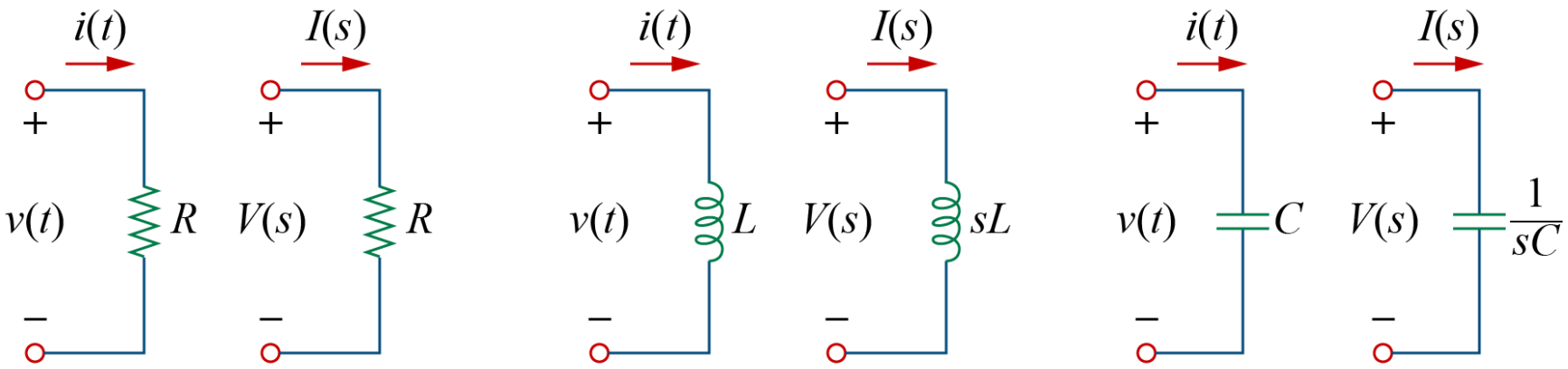

Non-Zero Initial Conditions

What do to:

1. If initial conditions are not given, find the values of all capacitor voltages and inductor currents at $t = 0^-$. Under steady-state and using DC input, the capacitor will be an open circuit and the inductor will be a short circuit.

2. For $t > 0$, transform the circuit from the time domain to the s-domain & draw the s-domain circuit with all initial conditions properly represented.

3. Solve the circuit using circuit theorems and relationships developed.

4. Take the inverse transform of the solution and thus obtain the solution in the time domain.

Non-Zero Initial Conditions – How to Apply Them in Schematic

Capacitors:

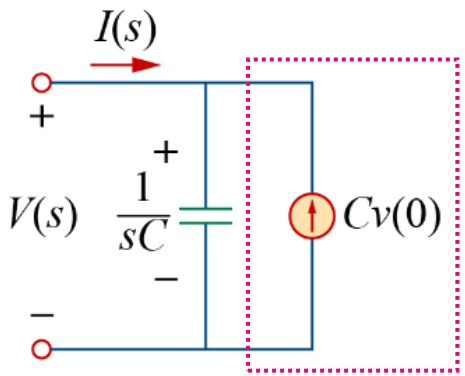

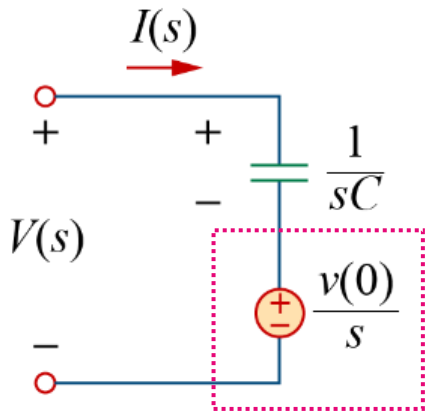

Inductors:

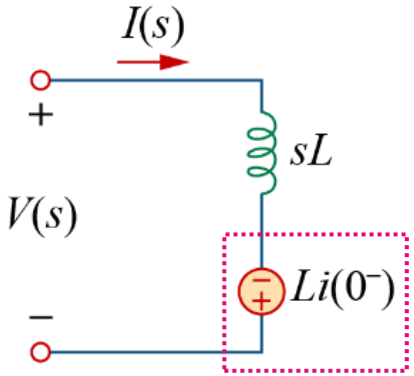

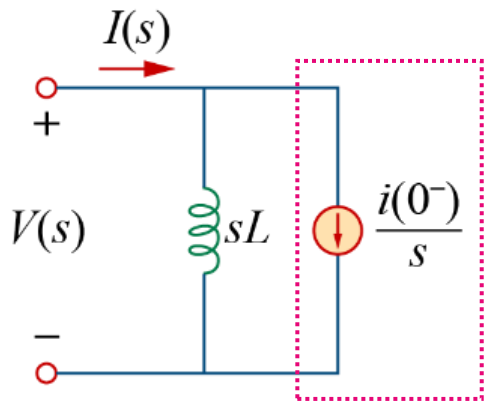

Transfer Function *H(s)* & Impulse Response *h(t)*

- A transfer function of a circuit, $H(s)$, describes how an output behaves with respect to an input source, assuming no initial energy (zero initial condition).

- Defined as the ratio of the output response $Y(s)$ to the input response $X(s)$: $\boldsymbol{H(s)} = \dfrac{\boldsymbol{Y(s)}}{\boldsymbol{X(s)}}$

- $H(s)$ could be Voltage Gain $= \dfrac{V_o(s)}{V_i(s)}$, Current Gain $= \dfrac{I_o(s)}{I_i(s)}$, Impedance $= \dfrac{V(s)}{I(s)}$, or Admittance $= \dfrac{I(s)}{V(s)}$

- The inverse Laplace transform is $h(t)$, which is the unit impulse response of the circuit.

Some Notes on Tutorial 7

Tutorial 7 Problem 1

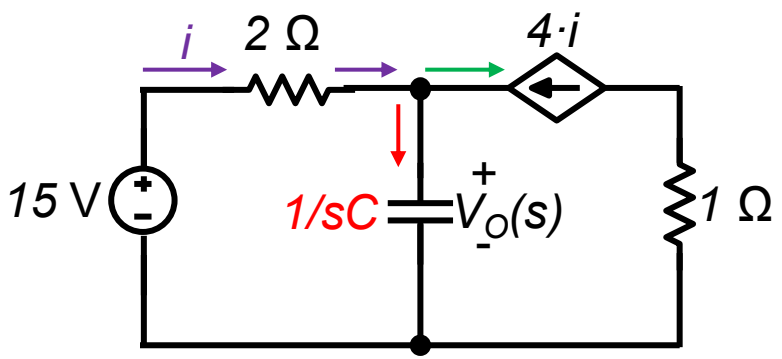

$$V_O(s) = \frac{37.5}{(s+2.5)}$$

$$\boxed{\boldsymbol{V_O(t) = 37.5\left(e^{-2.5t}\right)u(t)}}$$

Tutorial 7 Problem 2

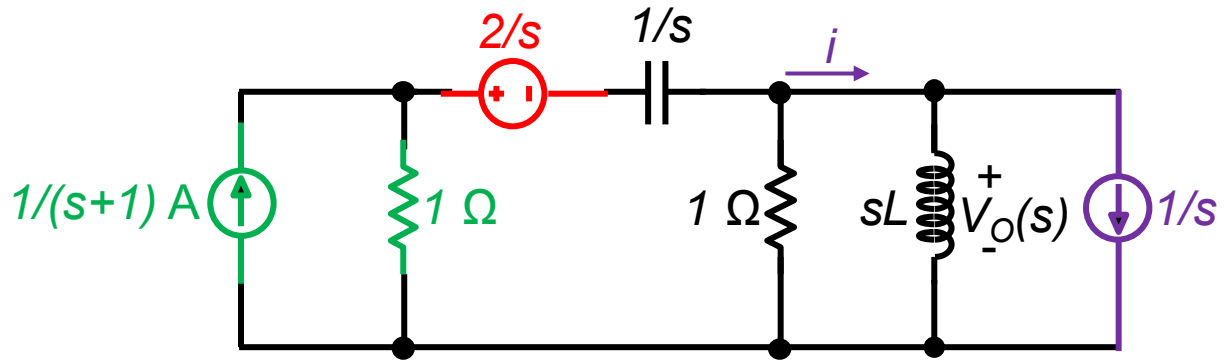

$$V_O(s) = \frac{-s^2 - 2s - 0.5}{(s+1)(s^2+s+0.5)}$$

$$V_O(s) = \frac{1}{s+1} + \frac{-2s-1}{s^2+s+0.5}$$

$$\boxed{\boldsymbol{V_O(t) = [e^{-t} - 2\,e^{-0.5t}\cos(0.5t)]\,u(t)\ V}}$$

Some Notes on Tutorial 7

Tutorial 7 Problem 3

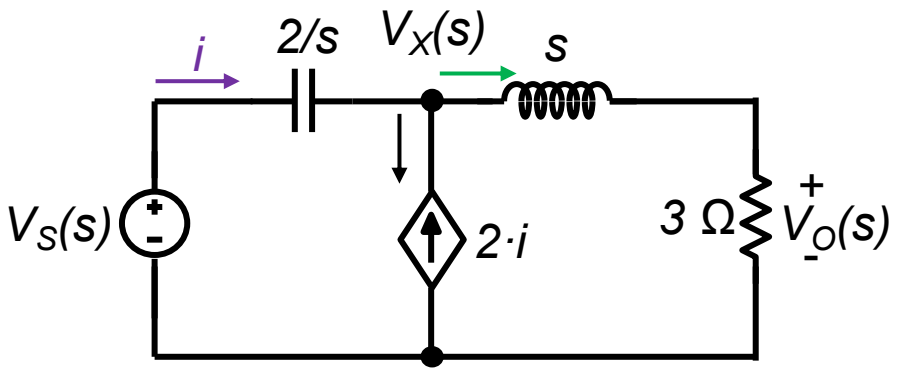

$$\therefore \frac{V_O(s)}{V_S(s)} = \frac{V_X(s)}{V_S(s)}\frac{V_O(s)}{V_X(s)}$$

$$= \boxed{\frac{3s(s+3)}{3s^2+9s+2}\,\frac{3}{3+s} = \frac{9s}{3s^2+9s+2}}$$

Tutorial 7 Problem 4

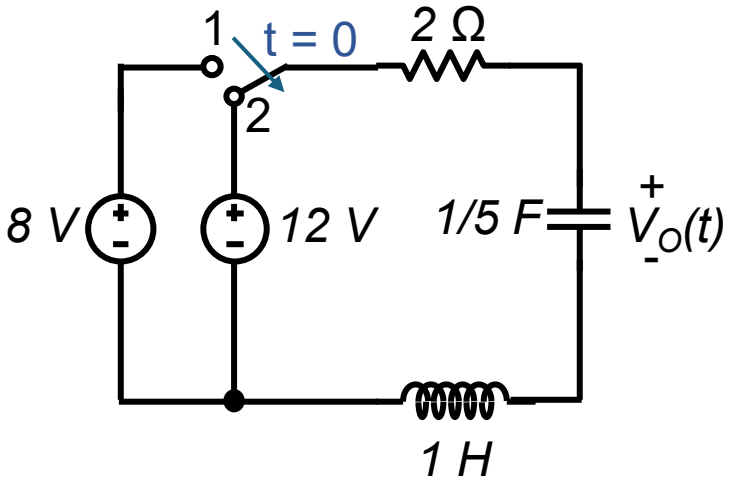

$$V_O(s) = \frac{12}{s} - 4\frac{(s+1)}{(s+1)^2+2^2} - \frac{2(2)}{(s+1)^2+2^2}$$

$$V_O(t) = \boxed{[12 - 4e^{-t}\cos(2t) - 2e^{-t}\sin(2t)]\,u(t)V}$$