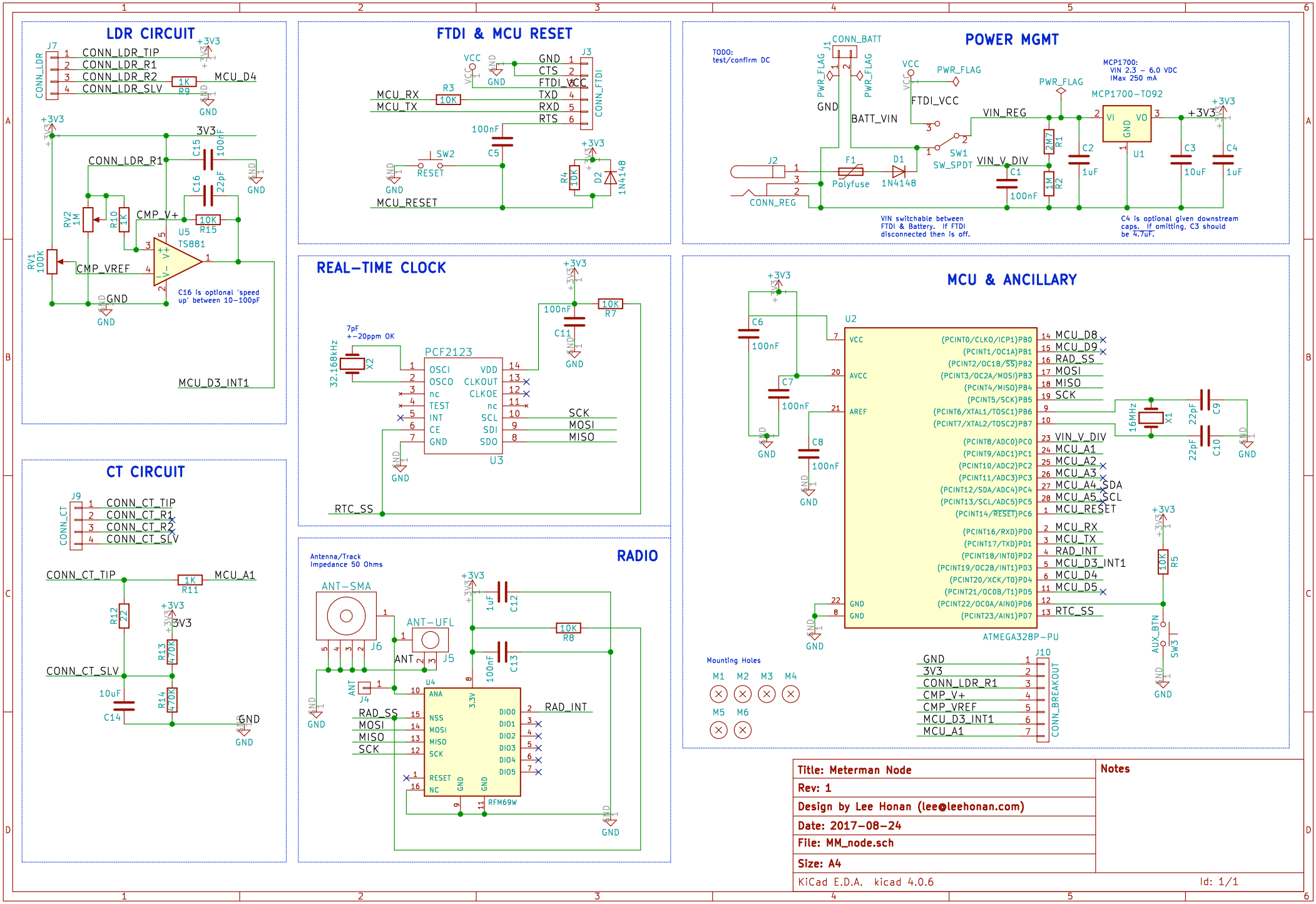

Title: Meterman Node	Notes
Rev: 1	
Design by Lee Honan (lee@leehonan.com)	
Date: 2017-08-24	
File: MM_node.sch	
Size: A4	
KiCad E.D.A. kicad 4.0.6	Id: 1/1