Using Knowledge Concept Aggregation towards Accurate Cognitive Diagnosis

Xinping Wang, Caidie Huang, Jinfang Cai, Liangyu Chen*
Shanghai Key Laboratory of Trustworthy Computing, East China Normal University
Shanghai, China
lychen@sei.ecnu.edu.cn

ABSTRACT

Cognitive diagnosis is a crucial task in the field of educational measurement and psychology, which is aimed to mine and analyze the level of knowledge for a student in his or her learning process periodically. While a number of approaches and tools have been developed to diagnose the learning states of students, they do not fully learn the relationship between students, exercises and knowledge concepts in the learning system, or do not consider the traits that it is easier to complete diagnosis when focusing on a small part of knowledge concepts rather than all knowledge concepts. To address these limitations, we develop CDGK, a model based artificial neural network to deal with cognitive diagnosis. Our method not only captures non-linear interactions between exercise features, student scores, and their mastery on each knowledge concept, but also performs an aggregation of the knowledge concepts via converting them into graph structure, and only considering the leaf node in the knowledge concept tree, which can reduce the dimension of the model without accuracy loss. In our evaluation on two real-world datasets, CDGK outperforms the state-of-the-art related approaches in terms of accuracy, reasonableness and interpretability.

CCS CONCEPTS

• **Information systems** → **Data mining**; • **Computing methodologies** → *Knowledge representation and reasoning*.

KEYWORDS

Cognitive Diagnosis; Knowledge Graph; Knowledge Concept Aggregation; Guessing parameter; Artificial Neural Network

ACM Reference Format:
Xinping Wang, Caidie Huang, Jinfang Cai, Liangyu Chen. 2021. Using Knowledge Concept Aggregation towards Accurate Cognitive Diagnosis. In *Proceedings of the 30th ACM Int'l Conf. on Information and Knowledge Management (CIKM '21), November 1–5, 2021, Virtual Event, Australia.* ACM, New York, NY, USA, 10 pages. https://doi.org/10.1145/3459637.3482311

*Corresponding author.

Permission to make digital or hard copies of all or part of this work for personal or classroom use is granted without fee provided that copies are not made or distributed for profit or commercial advantage and that copies bear this notice and the full citation on the first page. Copyrights for components of this work owned by others than ACM must be honored. Abstracting with credit is permitted. To copy otherwise, or republish, to post on servers or to redistribute to lists, requires prior specific permission and/or a fee. Request permissions from permissions@acm.org.
CIKM '21, November 1–5, 2021, Virtual Event, Australia.
© 2021 Association for Computing Machinery.
ACM ISBN 978-1-4503-8446-9/21/11…$15.00
https://doi.org/10.1145/3459637.3482311

1 INTRODUCTION

Cognitive Diagnosis (CD) is a fundamental issue in intelligent education, educational measurement and psychology [5, 15], which aims to discover the knowledge states of a student during his or her learning history [19, 26]. As shown in Figure 1, the student chooses some exercises (e.g., e_1,e_2,e_3,e_4) to answer, then the cognitive diagnosis model infers the student's mastery on each knowledge concept (e.g., Decimals) contained in the exercises based on the scores (e.g., true or false), which are left by the student. The results of cognitive diagnosis can enable a number of applications such as exercise recommendation[33, 34] and adaptive learning [14, 24].

Approaches have been developed for cognitive diagnosis can be categorized as statistical approaches and supervised approaches. The statistical approaches, such as Item Response Theory (IRT) [9, 16], Multidimensional IRT (MIRT) [1] and Deterministic Inputs, Noisy and Gate Model (DINA) [6], rely on a designed interaction function, and the results are solved according to statistical methods such as parameter estimation (e.g., maximum likelihood estimation, MLE). Existing statistical approaches start from the theory of educational psychology and are the basis of cognitive diagnosis but usually require professional expertise and manual labeling.

In the other side, supervise approaches are explored to solve the problem of CD more automatically. So far, existing supervised approaches include factorization machines [27], neural networks [28] and variational factor analysis [29]. Still, we observe that there is much room to improve the accuracy and the effectiveness. Challenges include modelling the relationship between the student scores, knowledge components, exercise attributes like difficulty, discrimination and guessing parameter [7] are not addressed at the same time by existing supervised approaches. Besides, since it is easier to complete cognitive diagnosis when focusing on a small part of knowledge concepts rather than all knowledge concepts [20] (e.g., comparing with the comprehensive final exam, teacher may estimate the states of students more precisely in the targeted unit test), how to aggregate the knowledge concepts is still a challenge, which has not been considered before.

In this paper, we present a novel model CDGK for cognitive diagnosis in a learning system. CDGK applies an artificial neural network to capture non-linear interactions between exercise features, student scores, and their mastery on each knowledge concept. We also improve our model by aggregating the knowledge concept through converting them into a graph structure[17], and only considering the leaf node in the knowledge concept tree, which can reduce the dimension of the model but almost with no loss of accuracy. Our key contributions are listed as follows.

- We explore the aggregation of knowledge concepts during the process of cognitive diagnosis, which has not been considered in the existing work to the best of our knowledge.
- We present CDGK, a neural network based method designed to address the challenges involved with supervised cognitive diagnosis in a learning system.
- We provide empirical evidences using two real-world datasets, to show our method outperforms the state-of-the-art related models in terms of accuracy and interpretability. We also provide a reasonableness analysis of CDGK with ablation experiments, to show our optimization is critical and necessary for the performance of cognitive diagnosis.

The rest of this paper is organized as follows. We show related work in Section 2, and present preliminaries in Section 3. After describing our model in Section 4, we provide experimental results on real-world datasets in Section 5, and conclude in Section 6.

2 RELATED WORK

Generally, the related work of this study can be categorized into the following three aspects.

Statistical Methods for CD. Cognitive diagnosis aims at estimating student's mastery on each knowledge concept by predicting their scores on exercises that have not been practiced. The most popular models based on statistical method are DINA [6] and IRT [9] which came from the educational psychology area. DINA considers that students can answer one exercise correctly only if they have mastered all the knowledge concepts on this exercise, otherwise they can only guess the right answer. Let n_{ij} be the latent feature of student s_i on exercise e_j with K knowledge concepts, which is defined as

$$\eta_{ij} = \prod_{l=1}^{K} \theta_{il}^{Q_{jl}}, \tag{1}$$

where $\theta_{il} = 1$ represents that student s_i has mastered the knowledge concept k_l and $\theta_{il} = 0$ otherwise; $Q_{jl} = 1$ indicates that exercise e_j contains the knowledge concept k_l and $Q_{jl} = 0$ otherwise. In DINA, the probability $p\left(r_{ij} = 1|\theta_i\right)$ that student s_i leave the right score r_{ij} on exercise e_j with the trait feature θ_i can be represented as:

$$p\left(r_{ij} = 1|\theta_i\right) = c_j^{1-n_{ij}} \left(1 - \xi_j\right)^{n_{ij}}, \tag{2}$$

where c_j is the guessing parameter of exercise e_j and ξ_j is the slipping parameter.

As for IRT, the probability that student s_i leaves the right score r_{ij} on exercise e_j can be represented as:

$$p\left(r_{ij} = 1|\theta_i\right) = \frac{1}{1 + e^{-\alpha_j(\theta_i - \beta_j)}}, \tag{3}$$

where α_j represents the exercise discrimination, β_j represents the exercise difficulty and θ_i represents the trait feature of the student. An improved IRT model is MIRT [1], which is the multidimensional case of IRT. All these models mainly rely on a designed interaction function and need much manual labeling from the experts, and the results are solved according to statistical methods such as maximum likelihood estimation.

Supervised Methods for CD. With the development of machine learning, supervised approaches are explored to solve the cognitive diagnosis problem more automatically. KTM [27] applied the factorization machines in recommender systems to predict student performance and provided a method to combine the features in a learning system. VFA [29] is a variational factor analysis framework and utilizes variational inference to estimate students' mastery level on each knowledge concept.

Artificial Neural Networks. We denote an Artificial Neural Network (ANN) by a mapping $f : \mathbb{R}^n \rightarrow \mathbb{R}^m$. The mapping f can be expressed as a composite of several mappings f_k where $k \in \{1, 2, ..., n-1\}$ and n is the number of layers of the neural network. Formally, f_k is described as:

$$f_k(x^{[k]}) = \phi^{[k]}(W^{[k]}x^{[k]} + b^{[k]}), \tag{4}$$

where $\phi^{[k]}$ is a nonlinear function which we call the activation function. $W^{[k]}$ and $b^{[k]}$ are trainable parameters which represent the weight matrix and the bias vector respectively.

ANNs have reached a lot of achievements in many different fields, including adaptive system [12, 30, 32], face recognition [23], man-machine game [8], automatic driving [18], and many others. ANNs have also been applied in education such as question difficulty prediction [35], adaptive learning [14] and code education [31]. The applications for cognitive diagnosis include deep knowledge tracing (DKT) [21] and NeuralCDM (NCDM) [28]. DKT uses recurrent neural networks (RNNs) to predict students' scores but do not model the relationship between the student scores, knowledge components, difficulty, discrimination and guessing parameter. NCDM incorporates neural networks to learn the exercising interactions, and applies monotonicity assumption [22] to ensure the interpretability of the model. However, considering that it is easier to make cognitive diagnosis when focusing on a small part of knowledge concepts rather than all knowledge concepts, NCDM still has much room for improvement. Towards this end, in this paper we propose a cognitive diagnosis model CDGK which not only makes full use of the information in the learning system, but also considers the aggregation of knowledge concepts. According to the experimental results, CDGK could achieve higher accuracy, more reasonableness and more interpretability on the real-world datasets.

3 PRELIMINARIES

3.1 Definition of Cognitive Diagnosis

A learning system $\mathcal{L}$ [2, 4] consists of students, exercises, scores and knowledge concepts. Each exercise is labelled with several knowledge concepts and each student can choose some exercises to answer. Formally, $\mathcal{L}$ is defined as follows.

Definition 3.1 (Learning System). A learning system $\mathcal{L}$ is a tuple $\langle S, E, R, KT, \mathbf{Q}\rangle$, where

- $S = \{s_1, s_2, \ldots, s_M\}$ and $E = \{e_1, e_2, \ldots, e_N\}$ are sets of students and exercises respectively.
- $R = \bigcup_{j=1}^{N} \bigcup_{i=1}^{M} \{r_{ij}\}$ is a set of scores, where r_{ij} corresponds to the score that student s_i got on the exercise e_j. Each score r_{ij} is in $\{0, 1\}$ where 1 indicates the exercise e_j is correctly answered while 0 stands in the opposite.
- $KT = (V, P)$ is a knowledge concept tree where P is the set of relationships between knowledge concepts and $V = \{k_1, k_2, \ldots, k_K\}$ denotes a set of knowledge concepts. For an

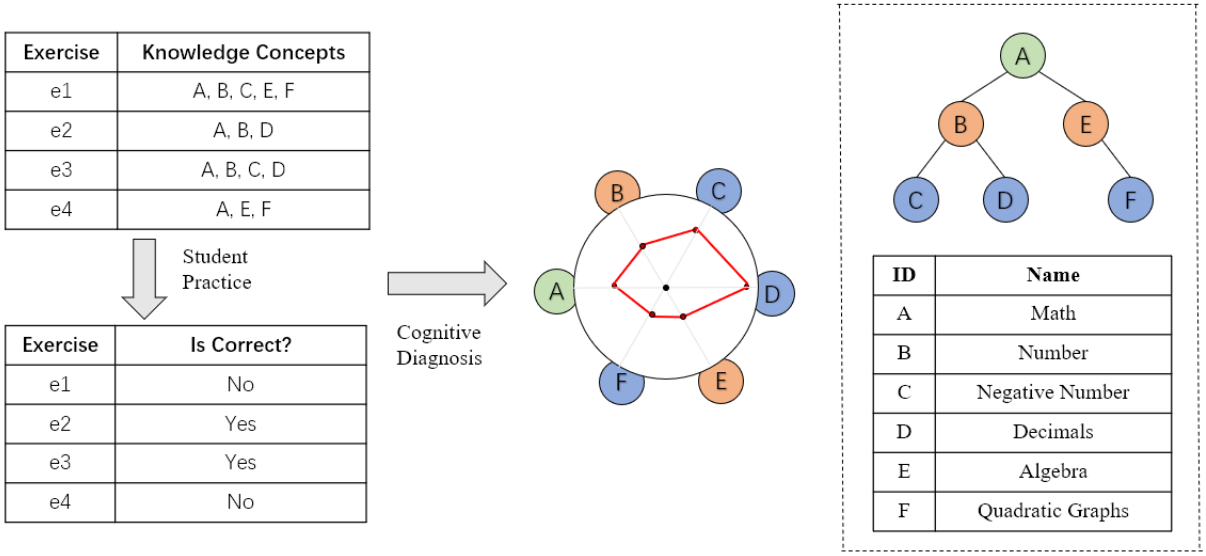

Figure 1: Illustration of cognitive diagnosis. The student chooses some exercises to answer and leaves the scores. Cognitive diagnosis can analyze student's mastery of each knowledge concept according to the scores and the knowledge concept tree.

element (k_i, k_j) in P, it indicates that the knowledge concept k_i is the parent of k_j. For example, "Number" is the parent knowledge concept of "Negative Number".

- $\mathbf{Q} = \{Q_{ij}\}_{N\times K}$ is a matrix denotes the relationship between the exercises and the knowledge concepts. Each element Q_{ij} is in the binary set $\{0, 1\}$ where $Q_{ij} = 1$ if exercise e_i contains knowledge concept k_j and $Q_{ij} = 0$ otherwise. Moreover, if exercise e_i contains knowledge concept k_j, then e_i also contains the parent knowledge concepts of k_j.

Cognitive diagnosis is a model to measure students' mastery of knowledge concepts. As shown in Figure 1, after the student practiced some exercises, cognitive diagnosis can estimate that the student learns well on "Negative Number" but may be poor at "Algebra". We now define the cognitive diagnosis problem.

Definition 3.2 (Cognitive Diagnosis). Given a learning system $\mathcal{L} = \langle S, E, R, KT, \mathbf{Q}\rangle$, the goal of cognitive diagnosis problem is to estimate student's mastery of each knowledge concept $k_i \in V$ by predicting student's performance on exercises that have not been practiced.

3.2 Desiderata for Modelling Cognitive Diagnosis Problem

Based on our discussion on prior approaches (KTM [27], NCDM [29] and VFA [28]) and concepts in Section 2 from educational psychology, we present the desiderata that is applied to guided our method for tackling cognitive diagnosis problem.

Student Scores. A learning system consists of a set of scores which play a key role in estimating student's mastery of knowledge concepts. CD models also make predictions on student's performance using information from scores.

Knowledge Components. The knowledge component (KC) is the set of knowledge concepts involved in each question (e.g., the exercise e_1 in Figure 1 has the knowledge component $\{A, B, C, E, F\}$), which is the key factors of the exercise and can be represented as the matrix $\mathbf{Q}$. Since our goal is to estimate student's mastery of each knowledge concept, CD model should exploit the information of knowledge components.

Table 1: Comparison of methods for cognitive diagnosis. Scores: Student scores. Knowledge: Knowledge components. Diff & Disc: Exercise difficulty and exercise discrimination. Guess: guessing parameter. Aggregation: Knowledge concept aggregation.

	CDGK	KTM	NCDM	VFA
Scores	✓	✓	✓	✓
Knowledge	✓	✓	✓	
Diff & Disc	✓	✓	✓	
Guess	✓	✓		
Aggregation	✓			

Exercise Difficulty and Discrimination. Under the assumption that difficulty and discrimination of exercise will affect the predicting performance based on the IRT model [9], exercise difficulty and discrimination need to be taken into account during the process of cognitive diagnosis.

Guess. According to the DINA model, students may guess the correct answer even if they do not master all the necessary knowledge concepts. Thus, model should consider the guessing parameter for more accurate diagnosis.

Knowledge Concept Aggregation. In addition to the above factors from student and exercise, focusing on a small part of knowledge concepts can get more accurate cognitive diagnosis results

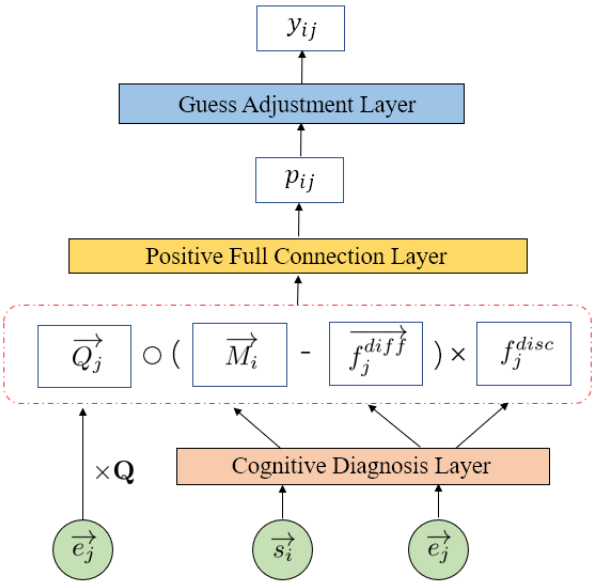

Figure 2: Description of cognitive diagnosis by CDGK. Estimation of the score of student s_i on exercise e_i. The final estimation y_{ij} is produced via three components of CDGK shown in colored boxes, which are described in Section 4.1. The vector $\overrightarrow{M_i}$ characterizes the student's mastery of each knowledge concept, which is the goal of our cognitive diagnosis model.

than focusing on all knowledge concepts. For example, compared with the comprehensive final exam, teacher may estimate the states of students more precisely in the targeted unit test. Therefore, knowledge concept aggregation can not only reduce the model parameters, but also improve the precision (which will be shown in Section 4.2 and Section 5.4).

Table 1 summarizes our model CDGK and existing methods in terms of the desiderata above. From the table, we can observe that CDGK considers the knowledge concept aggregation for better performance which has not been discussed in the previous work, and also considers the guessing parameter which has not been involved in the ANN-based cognitive diagnosis model.

4 METHOD

Effective models of cognitive diagnosis in learning systems involve addressing the requirements presented in Section 3.2. In this section, we present our basic cognitive diagnosis model CDGK using artificial neural networks, which is shown in Figure 2, and improve CDGK by incorporating knowledge concept aggregation for better performance. Details are introduced as below.

4.1 CDGK Model

Given a learning system $\mathcal{L} = \langle S, E, R, KT, \mathbf{Q} \rangle$, let $\overrightarrow{s_i}$ and $\overrightarrow{e_j}$ be the feature vector of student s_i and exercise e_j (e.g., one-hot encoding respectively), CDGK can be commonly expressed as:

$$y_{ij} = GA\left(PFC\left(CD\left(\overrightarrow{s_i}, \overrightarrow{e_j}\right), \overrightarrow{e_j} \times \mathbf{Q}\right)\right), \tag{5}$$

where y_{ij} is the predicted score of student s_i on exercise e_j; CD, PFC, and GA are functions of cognitive diagnosis layer, positive full connection layer and guess adjustment layer respectively, which will be introduced as below.

Cognitive Diagnosis Layer. We propose a cognitive diagnosis layer to map from vector $\overrightarrow{e_j}$ and $\overrightarrow{s_i}$ to the trait vectors $\overrightarrow{Q_j}$, $\overrightarrow{M_i}$, $\overrightarrow{f_j^{diff}}$ and f_j^{disc}.

- Knowledge components vector $\overrightarrow{Q_j} \in \{0,1\}^K$ indicates the relationship between exercises and knowledge concepts, which can be expressed as:

$$\overrightarrow{Q_j} = \overrightarrow{e_j} \times \mathbf{Q}, \tag{6}$$

  where $\mathbf{Q}$ is pre-labelled by experts.
- Student mastery vector $\overrightarrow{M_i}$ characterizes the student's mastery on each knowledge concept, which is the goal of our cognitive diagnosis model. For example, $\overrightarrow{M_i} = [0.1, 0.2, 0.8]$ indicates that student s_i learns well on knowledge concept k_3, but is poor at knowledge concepts k_1 and k_2. Formally, $\overrightarrow{M_i} \in (0,1)^K$ can be expressed as:

$$\overrightarrow{M_i} = \sigma\left(\overrightarrow{s_i} \times \mathbf{A}\right), \tag{7}$$

  where $\mathbf{A} \in \mathbb{R}^{M \times K}$ is a trainable matrix, and σ represents the *Sigmoid* function which is defined as:

$$\sigma(x) = \frac{1}{1 + e^{-x}}. \tag{8}$$

- Vector $\overrightarrow{f_j^{diff}}$ and parameter f_j^{disc} represent two factors for one exercise where $\overrightarrow{f_j^{diff}}$ indicates the difficulty of each knowledge concept examined by the exercise e_j and f_j^{disc} indicates the discrimination of the exercise. Both factors are considered in the IRT model from the view of educational psychology. Formally, they can be obtained by:

$$\overrightarrow{f_j^{diff}} = \sigma\left(\overrightarrow{e_j} \times \mathbf{B}\right), \tag{9}$$

$$f_j^{disc} = \sigma\left(\overrightarrow{e_j} \times \mathbf{D}\right), \tag{10}$$

  where $\mathbf{B} \in \mathbb{R}^{N \times K}$ and $\mathbf{D} \in \mathbb{R}^{N \times 1}$ are trainable matrices.

Positive Full Connection Layer. Based on the IRT model [9] and the feature vector learned through the cognitive diagnosis layer, the first layer of the positive full connection layer can be formulated as:

$$\overrightarrow{x_{ij}} = \overrightarrow{Q_j} \circ \left(\overrightarrow{M_i} - \overrightarrow{f_j^{diff}}\right) \times f_j^{disc}, \tag{11}$$

where the operator $\circ$ is element-wise product. We then use a single layer feedforward neural network to output the probability p_{ij} that student s_i answers the exercise e_j correctly, which can be formulated as:

$$p_{ij} = \phi\left(\mathbf{W} \times \overrightarrow{x_{ij}} + \overrightarrow{b}\right), \tag{12}$$

where ϕ is the non-linearity activation function (*Sigmoid* used in our model), $\mathbf{W}$ and $\overrightarrow{b}$ are trainable parameters. To ensure the interpretability of our model, we restrict each element of $\mathbf{W}$ to be positive, similar to NCDM [28], during the process of training, as we will explain in Section 4.3. Without loss of generality, the number of the positive full connection layers can be adjusted according to the actual situation.

Guess Adjustment Layer. In reality, even if student s_i doesn't understand exercise e_j, they may guess the right answer. In a learning system $\mathcal{L}$, it is also reasonable to assume that guessing parameter should be adjusted when cognitive diagnosis is modelled.

Let $c_{ij} \in [0, 1]$ denote the probability that student s_i guesses the correct answer, which can be formulated as:

$$c_{ij} = \sigma\left(\left[\overrightarrow{s_i} || \overrightarrow{Q_j}\right] \times \mathbf{E}\right), \tag{13}$$

where $||$ is a concatenation operator and $\mathbf{E} \in \mathbb{R}^{(M+K)\times 1}$ is a trainable matrix.

We then use a scaled and shifted guessing parameter c^*_{ij} to account for the possible discrepancy between the guessing parameter in a given learning system and the provided features of students and exercises, which can be expressed as:

$$c^*_{ij} = \sigma\left(\gamma \cdot c_{ij} + \beta\right), \tag{14}$$

where γ and β are trainable parameters.

To compute the final probability that student s_i answer exercise e_j correctly, we apply adjustments of guessing parameter on the probability estimation p_{ij}, which can be expressed as:

$$y_{ij} = c^*_{ij} + (1 - c^*_{ij}) \cdot p_{ij}. \tag{15}$$

4.2 Knowledge Concept Aggregation

The key component of our model is the positive full connection layer, whose dimension is related to the number of knowledge concepts. Therefore, we improve the basic CDGK by considering the leaf nodes and incorporating knowledge concept aggregation, which can reduce the dimensionality, for better performance. Details are introduced as bellow.

Leaf Node. The knowledge concept tree $KT = (V, P)$ in a learning system $\mathcal{L}$ has some inherent characteristics in structure, i.e., the parent node "Number" contains its child nodes "Negative Number" and "Decimals". We can infer the parent nodes through the leaf nodes, therefore only consider the leaf nodes of knowledge concepts in the cognitive diagnosis layer. Since the dimension in the positive full connection layer is related to the number of knowledge concepts, discarding non-leaf nodes can reduce the parameters of the model without losing the precision (which will be shown in Section 5.4).

Let $V^{leaf} \subseteq V$ denote the set of leaf nodes in the knowledge concept tree, our model CDGK can be easily extended through rewriting the $\mathbf{Q}$-matrix as $\mathbf{Q}^{leaf} = \left\{Q^{leaf}_{ij}\right\}_{N\times|V^{leaf}|}$, where $Q^{leaf}_{ij} = 1$ if $k_j \in V_{leaf}$ and $Q_{ij} = 1$, otherwise $Q^{leaf}_{ij} = 0$. For example, for Exercise 1 in Figure 1, we discard the knowledge concepts $\{A, B, E\}$ during the training process.

As for non-leaf knowledge concept nodes, considering that a parent node is the union of the child nodes, we can backtrack the student's mastery on the parent node through the average of the leaf nodes:

$$m_p = \frac{1}{|Child(p)|} \sum_{j \in Child(p)} m_j, \tag{16}$$

where m_p is the estimated mastery on the knowledge concept k_p, $Child\,(p) = \left\{k_i | \left(k_p, k_i\right) \in P \wedge k_i \in V\right\}$, and $|\cdot|$ represents the length of the set.

Knowledge Concept Aggregation. Considering that there may be many knowledge concepts (e.g., 300 knowledge concepts) in a learning system, but only a few knowledge concepts (e.g., 3 knowledge points) are included in an exercise, the vector $\overrightarrow{x_{ij}}$ in Eq. 11 would be a very sparse vector, which will affect the model performance. Besides, in the actual situation, teachers or other people can estimate student's mastery on each knowledge concept more precisely in the targeted unit test than in the comprehensive final exam, we apply the knowledge concept aggregation to optimize the model.

We can convert the knowledge concepts $V^{leaf} \subseteq V$ into the form of graph, which we call it *knowledge concept graph*, with several connected components according to the relationships between exercises and knowledge concepts. As shown in Figure 3, each vertex in the graph represents one knowledge concept and each edge represents that two knowledge concepts are incorporated in the same exercise, which means the knowledge concepts in different connected components can be considered as unrelated.

According to the knowledge concept graph, each connected component can correspond to a low-dimensional sub-model which only contains the knowledge concepts involved in the connected component, since the knowledge concepts between different connected components will not appear in the same exercise. Therefore, CDGK can be further formulated as the union of unconnected sub-models.

Let h be an index of a connected component, V^h be the sets of knowledge concepts in h-th connected component, e^h_j be the exercise containing the knowledge concepts in V^h, and $\mathbf{Q}^h$ be the sub-matrix on V^h, we have $V^{leaf} = \bigcup_{h=1}^{H} V^h$, where H is the number of connected components. The sub-model CDGK-h can be converted from CDGK similarly through rewriting the $\mathbf{Q}$-matrix as $\mathbf{Q}^h = \left\{Q^h_{ij}\right\}_{N\times|V^h|}$, where $Q^h_{ij} = 1$ if $k_j \in V_h$ and $Q^h_{ij} = 0$ otherwise. The score of exercise e^h_j answered by student s_i can be predicted by the h-th sub-model CDGK-h, which is formulated as:

$$y^h_{ij} = GA\left(PFC\left(CD\left(\overrightarrow{s_i}, \overrightarrow{e^h_j}\right), \overrightarrow{e^h_j} \times \mathbf{Q}^h\right)\right). \tag{17}$$

As for the graph with only one connected component, we can cut the connected components by finding the cut-vertices of the knowledge concept graph [13]. The knowledge concepts represented by cut-vertices can be considered in both of connected components, and the final result which involves the cut-vertices can be computed as the average of the score of the corresponding sub-models. We will discuss how different number of connected components affect the prediction results in Section 5.5.

4.3 Model Training

In order to estimate student mastery vector $\overrightarrow{M_i}$ through predicting student's performance on exercises that have not been practiced,

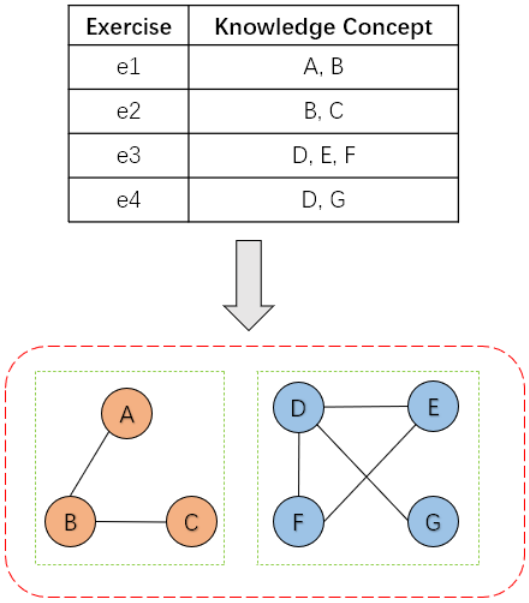

Figure 3: An example to convert the knowledge concepts into the form of knowledge concept graph according to the relationships between exercises and knowledge concepts. Each vertex in the graph represents one knowledge concept and each edge represents that two knowledge concepts are incorporated in the same exercise.

we train CDGK using cross entropy between the real score r_{ij} and the predicted value y_{ij}. Thus, the loss function is

$$-\sum_{i}\sum_{j}\left(r_{ij}\log y_{ij}+\left(1-r_{ij}\right)\log\left(1-y_{ij}\right)\right). \tag{18}$$

During the process of training, we apply the *monotonicity assumption* which is common used in IRT [25] to improve the performance and the interpretability of the model. The monotonicity assumption assumes that the probability of students answering the exercise correctly increases monotonically with the degree of mastery on each knowledge concept involved in the question. We restrict each element of $\mathbf{W}$ to be positive, similar to NCDM [28], to satisfy the monotonicity assumption.

5 EXPERIMENTS

In this section, we aim to answer the following research questions.

- RQ1: How do CDGK and other baselines perform on real-world datasets?
- RQ2: How do the components of CDGK, such as guessing parameter adjustment and knowledge concept aggregation affect its prediction?
- RQ3: How do the parameter sensitivity of different number of connected components affect the prediction results?
- RQ4: How interpretable is CDGK for cognitive diagnosis?

Table 2: Dataset summary.

Dataset	ASSIST	MathEC
#Students	4, 163	118, 971
#Exercises	17, 746	27, 613
#Knowledge concepts	123	389
#Tree level numbers	1	4
#Answers	324, 572	15, 867, 850
#Knowledge concepts per exercise	1.19	4.17
#Average scores per KC	8.05	11.13

We describe the datasets and baselines in Sections 5.1 and 5.2 respectively, and answer the above questions in Sections 5.3 ~ 5.6.

5.1 Datasets

In our experiments, we use the following two public real-world datasets of learning system:

- ASSIST [10]: An open dataset collected by the ASSISTments online tutoring system which provides 324 thousand scores answered by 4 thousand students on 17 thousand exercises with 123 knowledge concepts.
- MathEC [36]: An open dataset collected by an online education provider Eedi which provides 15 million scores answered by 118 thousand students on 27 thousand exercises with 389 knowledge concepts.

We filter students who have answered fewer than 15 and 50 questions for ASSIST and MathEC respectively so that every students can be diagnosed with enough data. The data are randomly split into 80%/20% train/test sets. Considering that the student may answer multiple exercises on one knowledge concept, and his/her mastery level can improve or regress with the number of answers, we preprocess part of the data in the dataset with answer time so that the answering time in the test set is later than time in the training set.

Table 2 summarizes basic statistics of the datasets. The exercises in both ASSIST and MathEC are objective exercises which means the score r_{ij} is in $\{0,1\}$, and $r_{ij}=1$ if the answer is true otherwise $r_{ij}=0$. The column "#Average scores per KC" represents the average amount of scores that each student answered on each knowledge concept, which can be formulated as:

$$AVG_{\#KC}=\frac{\sum_{i=1}^{M}\sum_{j=1}^{K}ans\left(i,j\right)}{\sum_{i=1}^{M}\sum_{j=1}^{K}I\left(ans\left(i,j\right)>0\right)}, \tag{19}$$

where $ans\left(i,j\right)$ is the amount of exercises which contain knowledge concept k_j and answered by student s_i. $I\left(\cdot\right)$ is the indicator function, where $I\left(\cdot\right)=1$ if the condition is satisfied, otherwise $I\left(\cdot\right)=0$.

5.2 Baselines

All of the baselines and CDGK use the same data in our experiments which have been described in Section 5.1. Methods for cognitive diagnosis in a learning system can be classified into two following families of approaches.

Table 3: Experimental results on student performance prediction on two real-world datasets. Best results are in bold, and second best results are underlined. The error bars after '±' are the standard deviations.

Method	ASSIST			MathEC		
	Accuracy	RMSE	AUC	Accuracy	RMSE	AUC
DINA [6]	0.650 ± 0.001	0.467 ± 0.001	0.676 ± 0.001	0.613 ± 0.001	0.485 ± 0.001	0.646 ± 0.002
IRT [9]	0.674 ± 0.002	0.464 ± 0.002	0.685 ± 0.002	0.693 ± 0.001	0.478 ± 0.001	0.710 ± 0.001
MIRT [1]	0.701 ± 0.001	0.461 ± 0.002	0.719 ± 0.002	0.719 ± 0.001	0.469 ± 0.001	0.755 ± 0.001
VFA [29]	0.681 ± 0.001	0.462 ± 0.001	0.674 ± 0.001	0.684 ± 0.002	0.476 ± 0.001	0.654 ± 0.001
KTM [27]	0.714 ± 0.003	0.441 ± 0.002	0.750 ± 0.002	0.724 ± 0.004	0.436 ± 0.003	0.759 ± 0.004
NCDM [28]	0.719 ± 0.008	0.439 ± 0.002	0.749 ± 0.001	0.701 ± 0.005	0.445 ± 0.002	0.718 ± 0.002
CDGK	**0.734 ± 0.003**	**0.435 ± 0.001**	**0.766 ± 0.001**	**0.739 ± 0.005**	**0.423 ± 0.001**	**0.781 ± 0.001**

Table 4: Results of ablation testing on our model. The contents within parentheses of the first column represent the components we remove in the experiments.

Model	ASSIST			MathEC		
	Accuracy	RMSE	AUC	Accuracy	RMSE	AUC
CDGK	**0.734 ± 0.003**	**0.435 ± 0.001**	**0.766 ± 0.001**	**0.739 ± 0.005**	**0.423 ± 0.001**	**0.781 ± 0.001**
CDGK (~~Guess~~)	0.721 ± 0.002	0.437 ± 0.001	0.751 ± 0.001	0.713 ± 0.003	0.436 ± 0.001	0.744 ± 0.001
CDGK (~~Aggregation~~)	0.725 ± 0.001	0.437 ± 0.001	0.755 ± 0.001	0.726 ± 0.002	0.440 ± 0.001	0.768 ± 0.001
CDGK (~~Guess, Aggregation~~)	0.719 ± 0.008	0.439 ± 0.002	0.749 ± 0.001	0.701 ± 0.005	0.445 ± 0.002	0.718 ± 0.002

Table 5: Performance of CDGK on MathEC with all nodes in the cognitive diagnosis layer vs. only considering the leaf nodes, where the row "Dimension" represents the length of $\overrightarrow{x_{ij}}$ in Eq. 11. Both methods are trained with 3 feedforward layers with the dimensions of 512, 256, 1 respectively.

Evaluation Metric	MathEC	
	All nodes	Leaf nodes
Dimension	389	**316**
Accuracy	0.726 ± 0.005	0.726 ± 0.005
RMSE	0.438 ± 0.001	0.440 ± 0.001
AUC	0.765 ± 0.001	0.768 ± 0.001

Statistical Approaches. Previously developed methods in educational psychology mostly belong to this category. We evaluate the following methods:

- Item Response Theory (IRT) [9].
- Multidimensional IRT (MIRT) [1].
- Deterministic Inputs, Noisy And gate model (DINA) [6].

Supervised Approaches. We explore the performance of representative supervised algorithms on cognitive diagnosis:

- VarFA (VFA) [29]: A variational inference factor analysis model.
- Knowledge Tracing Machines (KTM) [27]: A factorization machines for cognitive diagnosis.
- Neural Cognitive Diagnosis Model (NCDM) [28]: This is an artificial neural network model reviewed in Section 2. We add the guess adjustment layer and consider the aggregation of knowledge concepts.

During the experiments, we divide the knowledge concepts into 3 and 7 connected components in ASSIST and MathEC respectively, each sub-model uses 3 feedforward layers in the component of positive full connection layer with the dimensions of 256, 128, 1 respectively in our model. We use the *Sigmoid* as activation function for all of the layers and the input vector of student $\overrightarrow{s_i}$ and exercise $\overrightarrow{e_j}$ are encoded with one-hot representation.

All models are implemented by PyTorch using Python 3.7, and all experiments are run on a Linux server with the configuration of GPU RTX 2080Ti, and CPU@3.30GHz, 8GB of RAM.

5.3 Analysis of Cognitive Diagnosis Accuracy

It is difficult to directly evaluate the results of cognitive diagnosis since the result is a vector with each element represents the student's mastery on a knowledge concept, but we can not obtain the real knowledge states of students. Therefore, we indirectly evaluate the model same as the method in [15]. Since the results of cognitive diagnosis are often positively correlated with the probability of students answering the exercise correctly, we evaluate our model

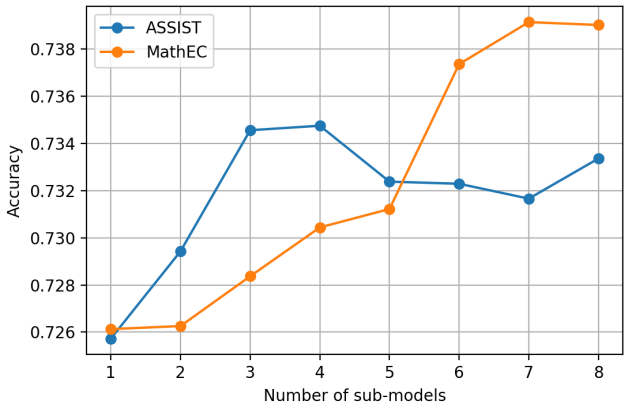

Figure 4: Prediction accuracy with different number of sub-models.

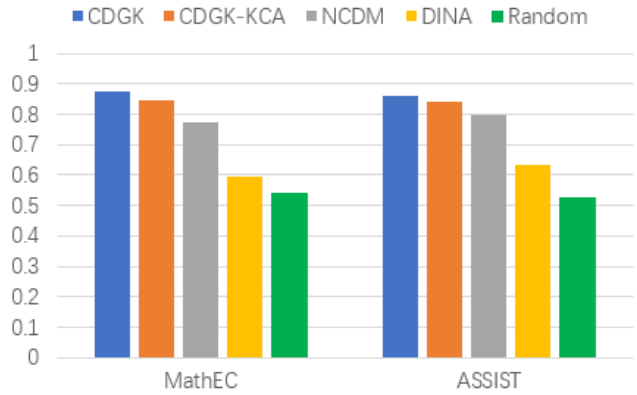

Figure 5: DOA results of model interpretability on MathEC and ASSIST. CDGK-KCA represents the model CDGK without the knowledge concept aggregation. Random represents the model that the student's mastery of each knowledge concept are randomly estimated.

by predicting student's performance on exercises that have not been practiced to discuss RQ1.

Table 3 summarizes the prediction performance with the evaluation metrics including accuracy, RMSE (root mean square error) and AUC (area under the curve) [3]. Best results are in bold, and second best results are underlined. Since the knowledge concept structure in ASSIST is not a tree, we evaluate CDGK with all nodes on this dataset but only leaf nodes on MathEC. All models are evaluated with 5-fold cross validation and the error bars after '±' are the standard deviations.

From the Table 3, we can observe that our model CDGK outperforms all other baselines on both ASSIST and MathEC, indicating the effectiveness of our model. On the other side, combined with Table 1 which lists the desiderata of the existing methods, the model VFA with the fewest features considered performs the worst on two datasets and the model KTM with the most features considered performs the second best in the experiments, which also proves that making full use of the information in the learning system can improve the precision of the model.

5.4 Analysis of Model Reasonableness

To see how the consideration of guessing parameter and knowledge concept aggregation affects model performance (RQ2), we run CDGK on both datasets ASSIST and MathEC to show our results of ablation testing. The column of optimization removed represents the components we remove in the experiments. In the results given in Table 4, we observe that each optimization removed will cause a decrease in precision, which indicates that the optimization is critical to the performance on accuracy, RMSE and AUC of our model.

We also evaluate the model on MathEC with all nodes in the cognitive diagnosis layer vs. only considering the leaf nodes. Since the knowledge concept structure in ASSIST is not a tree, we only choose MathEC for experiments. In Table 5, we observe that CDGK with leaf nodes can reduce the dimension in Eq. 11 of the model by 10.8% but almost no loss of accuracy.

5.5 Analysis of Parameter Sensitivity

In this section, we investigate the sensitivity of the number of sub-models (RQ3), which can be directly determined by the number of connected components, or be adjusted by splitting or merging the connected components. Let T be the number of connected components computed from the dataset. If the number of target sub-models is less than T, we merge connected components in ascending order according to the number of connected component nodes. For example, if there are three connected components: CP_1, CP_2 and CP_3, and the number of nodes in each connected component is 10, 20 and 30 respectively, we can merge CP_1 and CP_2. Otherwise, if the number of target sub-models is more than T, we convert the connected component with the most nodes into a network flow[13], where the capacity of each edge is 1. We can then divide the connected components by seeking the minimum cut [13].

In the results given in Figure 4, we can observe that the accuracy of the prediction performs worst when there is only one sub-model (i.e., no knowledge concept aggregation), and it trends for different number of sub-models differ greatly, which indicates the importance of knowledge concept aggregation, but the number of sub-models need to be carefully evaluated for better performance.

5.6 Analysis of Model Interpretability

We further conduct experiments to discuss the interpretability of student mastery vector diagnosed by our model (RQ4). The interpretability of the neural network based model mainly determined by monotonicity assumption, which have been shown in NCDM [28]. In this section, We want to show that our optimization can improve the interpretability.

Intuitively, student's mastery on knowledge concepts is directly proportional to the probability of students answering the right questions. In other words, the higher the students' mastery on

knowledge concepts contained in an exercise, the higher the probability of answering this exercise correctly. Therefore, we adopt Degree of Agreement (*DOA*) [11] to evaluate the interpretability of our model. For the knowledge concept k, we can calculate $DOA(k)$ by

$$\frac{1}{C}\sum_{u=1}^{M}\sum_{v=1}^{M}\delta\left(M_{uk},M_{vk}\right)\sum_{j=1}^{N}I_{jk}\frac{J\left(j,u,v\right)\wedge\delta\left(r_{uj},r_{vj}\right)}{J\left(j,u,v\right)}, \tag{20}$$

where $C=\sum_{u=1}^{M}\sum_{v=1}^{M}\delta\left(M_{uk},M_{ok}\right)$. M_{uk} is the mastery of student s_u on knowledge concept k. r_{uj} is the score of s_u on exercise e_j. $\delta\left(x,y\right)=1$ if $x>y$ and $\delta\left(x,y\right)=0$ otherwise. I_{jk} is similar to the indicator function, if e_j contains knowledge concept k, $I_{jk}=1$, else $I_{jk}=0$. If s_u and s_v both answer the exercise e_j, $J\left(j,u,v\right)=1$, else $J\left(j,u,v\right)=0$. Finally, *DOA* can be calculated based on the average of $DOA(k)$ on all knowledge concepts.

We compare the *DOA* values with DINA and NCDM since VFA, KTM and MIRT have no clear correspondence between their latent features and knowledge concepts. We also compare the *DOA* value with CDGK-KCA, which is defined as the model CDGK without the knowledge concept aggregation. Results presented in Figure 5 show that CDGK performs better on model interpretability than all other baselines. We also observe that the *DOA* value of CDGK-KCA is lower than the *DOA* value of CDGK, thus it indicates that the model which considers the structure of knowledge concepts is more interpretable.

6 CONCLUSION

Cognitive diagnosis is a crucial task in the field of educational psychology. In this paper, we present a novel model CDGK for cognitive diagnosis in a learning system based on neural network. Our main ideas can be summarized as utilizing neural network to capture rich information available in learning systems and improving the model by aggregating the knowledge concepts through converting them into graph structure. Experimental results of cognitive diagnosis on real-world datasets show that CDGK outperforms existing approaches with higher accuracy and more interpretability. We also provide empirical evidence with ablation testing to prove that the optimization is critical and reasonable to the performance of our model.

ACKNOWLEDGMENTS

This work was partially supported by the Open Research Fund of Engineering Research Center of Software/Hardware Codesign Technology and Application, Ministry of Education (East China Normal University) and OneSmart Education Group.

REFERENCES

[1] Raymond J. Adams, Mark Wilson, and Wenchung Wang. 1997. The Multidimensional Random Coefficients Multinomial Logit Model. *Applied Psychological Measurement* 21, 1 (1997), 1–23.
[2] Anderson. Ashton, Huttenlocher. Daniel, Kleinberg. Jon, and Leskovec. Jure. 2014. Engaging with massive online courses. *In Proceedings of the 23rd international conference on World wide web,* (2014), 587–698.
[3] Andrew P. Bradley. 1997. The use of the area under the roc curve in the evaluation of machine learning algorithms. *Pattern recognition* 30, 7 (1997), 1145–1159.
[4] Hugh Burns, Carol A. Luckhardt, James W. Parlett, and Carol L. Redfield. 2014. *Intelligent tutoring systems: Evolutions in design.* Psychology Press.
[5] J. R. Carbonel. 1970. Ai in cai: An artificial-intelligence approach to computer-assisted instruction. *IEEE transactions on man-machine systems* 11 (1970), :190–202.
[6] Jimmy de la Torre. 2009. DINA Model and Parameter Estimation: A Didactic. *Journal of Educational and Behavioral Statistics* 34, 1 (2009), 115–130.
[7] Louis V. DiBello, Louis A. Roussos, and William Stout. 2006. 31A Review of Cognitively Diagnostic Assessment and a Summary of Psychometric Models. *Handbook of statistics* 26 (2006), 979–1030.
[8] D.Silver and A.Huang. 2016. Mastering the game of go with deep neural networks and tree search. *Nature* 529, 7587 (2016), 484–489.
[9] Embretson, Susan E., Reise, and Steven P. 2000. *Item response theory for psychologists.* Psychology Press.
[10] Mingyu Feng, Neil Heffernan, and Kenneth Koedinger. 2009. Addressing the assessment challenge with an online system that tutors as it assesses. *User Modeling and User-Adapted Interaction* 19, 3 (2009), 243–266.
[11] F. Fouss, A. Pirotte, J.-M. Renders, and M. Saerens. 2007. Random-Walk Computation of Similarities between Nodes of a Graph with Application to Collaborative Recommendation. *IEEE Transactions on Knowledge and Data Engineering* 19, 3 (2007), 355–369.
[12] K.J.Hunt, D.Sbarbaro, R.Zbikowski, and P.J.Gawthrop. 1992. Neural networks for controlsystems: Asurvey. *Automatica* 28, 6 (1992), 1083–1112.
[13] Anany V. Levitin. 2002. *Introduction to the Design and Analysis of Algorithms.* Pearson Education.
[14] Qi Liu, Shiwei Tong, Chuanren Liu, Hongke Zhao, Enhong Chen, Haiping Ma, and Shijin Wang. 2019. Exploiting Cognitive Structure for Adaptive Learning. In *Proceedings of the 25th ACM SIGKDD International Conference on Knowledge Discovery & Data Mining, KDD 2019, Anchorage, AK, USA, August 4-8, 2019.* ACM, 627–635.
[15] Qi Liu, Runze Wu, Enhong Chen, Guandong Xu, Yu Su, Zhigang Chen, and Guoping Hu. 2018. Fuzzy Cognitive Diagnosis for Modelling Examinee Performance. *ACM Transactions on Intelligent Systems and Technology (TIST)* 9, 4 (2018), 48:1–26.
[16] F. Lord. 1952. *A theory of test scores.* Psychometric monographs.
[17] V. Tresp M. Nickel, K. Murphy and E. Gabrilovich. 2016. A review of relational machine learning for knowledge graphs. *Proc. IEEE* 104, 1 (2016), 11–33.
[18] M.Bojarski and D.DelTesta. 2016. End to end learning for self-driving cars. *arXiv preprint arXiv:1604.07316* (2016).
[19] Zachary Pardos and Neil Heffernan. 2010. Modeling individualization in a Bayesian networks implementation of knowledge tracing. *In Proc. International Conference on User Modeling, Adaptation, and Personalization* (2010), 255–266.
[20] Jean Piaget and Eleanor Duckworth. 1970. Genetic epistemology. *American Behavioral Scientist* 13, 3 (1970), 459–480.
[21] Chris Piech, Jonathan Bassen, Jonathan Huang, Surya Ganguli, Mehran Sahami, Leonidas Guibas, and Jascha Sohl-Dickstein. 2015. Deep knowledge tracing. In *NIPS'15 Proceedings of the 28th International Conference on Neural Information Processing Systems - Volume 1*, Vol. 28. 505–513.
[22] Mark D. Reckase. 2009. *Multidimensional item response theory models.* Springer. 79–112 pages.
[23] S.Lawrence, C.L.Giles, A.C.Tsoi, and A.D.Back. 1997. Face recognition: A convolutional neural network approach. *IEEE Transactions on Neural Networks* 8, 1 (1997), 98–113.
[24] Peter M. Taubman, William F. Pinar, Patrick Slattery, and William M. Reynolds. 1995. *Understanding curriculum: An introduction to the study of historical and contemporary curriculum discourses.* Vol. 17. Peter Lang.
[25] Toscher and Jahrer. 2010. Collaborative filtering applied to educational data mining. *KDD cup* (2010).
[26] K. VanLehn. 1988. Student modeling. *Foundations of Intelligent Tutoring Systems* (1988), 55–78.
[27] Jill-Jenn Vie and Hisashi Kashima. 2019. Knowledge Tracing Machines: Factorization Machines for Knowledge Tracing. *Proceedings of the AAAI Conference on Artificial Intelligence* 33, 1 (2019), 750–757.
[28] Fei Wang, Qi Liu, Enhong Chen, Zhenya Huang, Yuying Chen, Yu Yin, Zai Huang, and Shijin Wang. 2020. Neural Cognitive Diagnosis for Intelligent Education Systems. *Thirty-Fourth AAAI Conference on Artificial Intelligence* (2020).
[29] Jack Zichao Wang, Yi Gu, Andrew S. Lan, and Richard G. Baraniuk. 2020. VarFA: A Variational Factor Analysis Framework For Efficient Bayesian Learning Analytics. *arXiv preprint arXiv:2005.13107* (2020).
[30] T. Wang, H. Gao, and J. Qiu. 2016. A combined adaptive neural network and nonlinear model predictive control for multirate networked industrial process control. *IEEE Transactions on Neural Networks and Learning Systems* 27, 2 (2016), 416–425.
[31] Mike Wu, Milan Mosse, Noah Goodman, and Chris Piech. 2019. Zero Shot Learning for Code Education: Rubric Sampling with Deep Learning Inference. *In Proceedings of the AAAI Conference on Artificial Intelligence* 33 (2019), 782–790.
[32] Z.-G. Wu, P. Shi, H. Su, and J. Chu. 2014. Exponential stabilization for sampled-data neural-network-based control systems. *IEEE Transactions on Neural Networks and Learning Systems,* 25, 12 (2014), 2180–2190.

[33] X. Li J. Liu X. Tang, Y. Chen and Z. Ying. 2019. A reinforcement learning approach to personalized learning recommendation systems. *Brit. J. Math. Statist. Psych.* 72, 1 (2019), 108–135.
[34] Q. Hu J. Zhu Y. Zhou, C. Huang and Y. Tang. 2018. Personalized learning full-path recommendation model based on lstm neural networks. *Information Sciences* 444 (2018), 135–152.
[35] Huang Zhenya, Liu Qi, Chen Enhong, Zhao Hongke, Gao Mingyong, Wei Si, Su Yu, and Hu Guoping. 2017. Question Difficulty Prediction for READING Problems in Standard Tests. In *Proceedings of the Thirty-First AAAI Conference on Artificial Intelligence* (San Francisco, California, USA) *(AAAI'17)*. AAAI Press, 1352–1359.
[36] Wang Zichao, Angus Lamb, Saveliev Evgeny, Cameron Pashmina, Zaykov Yordan, Hernandez Lobato Jose Miguel, Turner Richard, Baraniuk Richard, Barton Craig, Peyton Jones Simon, Woodhead Simon, and Zhang Cheng. 2020. Diagnostic Questions: The NeurIPS 2020 Education Challenge. (2020).