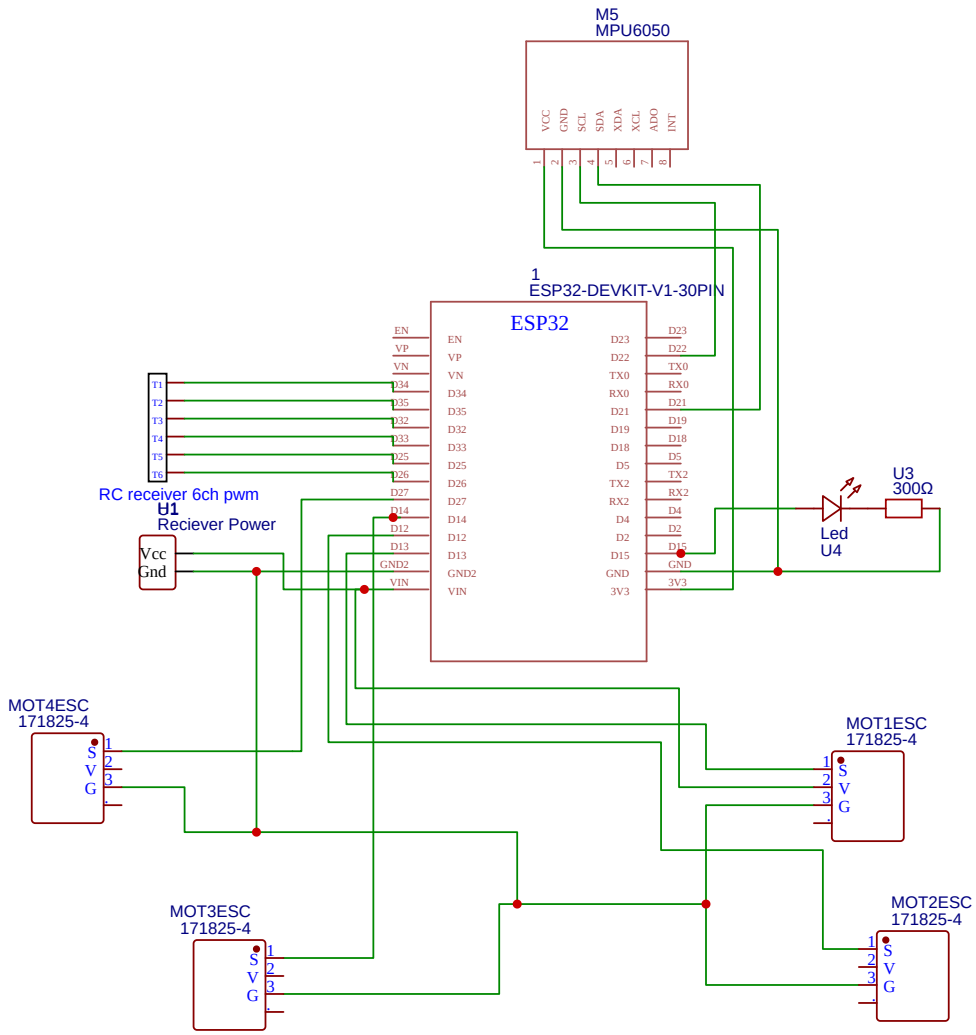

TITLE: ESP32 Quadcopter F450 FC		REV: 1.0
	Company:	Sheet: 1/1
	Date: 2024-02-13 Drawn By: Pratik Phadte	