Rev No.	Description of Revision	Date	Name	Approved	ECN No.

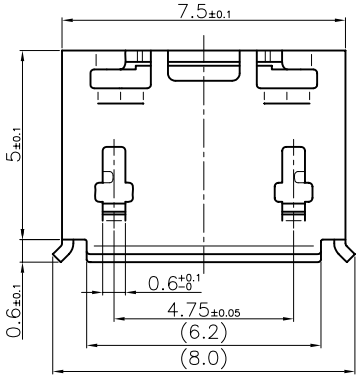

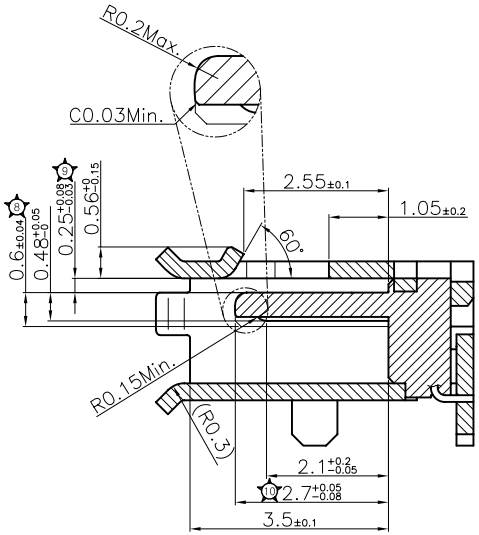

SECTION A-A'

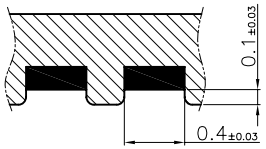

DETAIL B

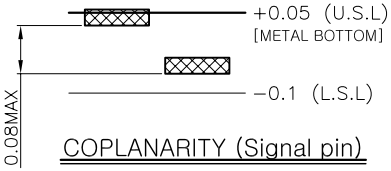

COPLANARITY (Signal pin)

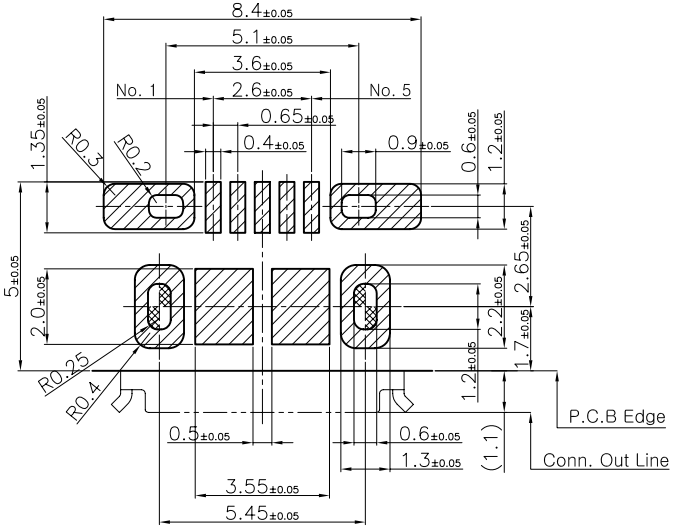

P.C.B LAYOUT

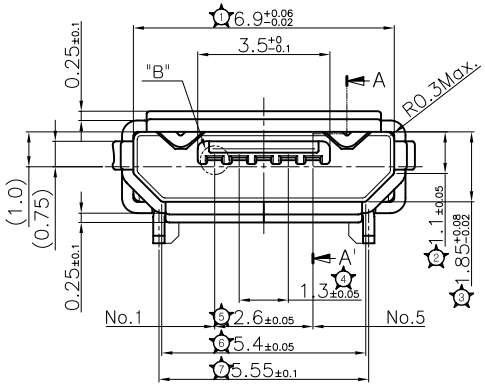

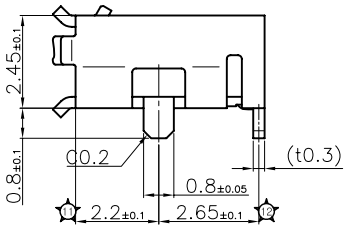

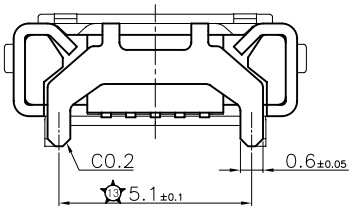

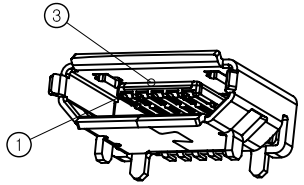

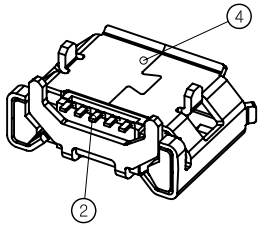

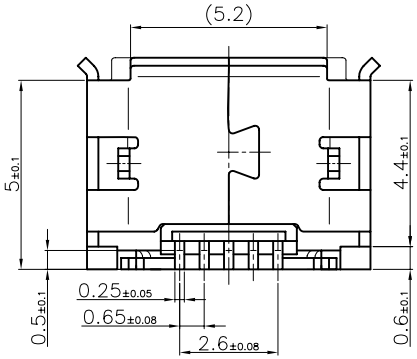

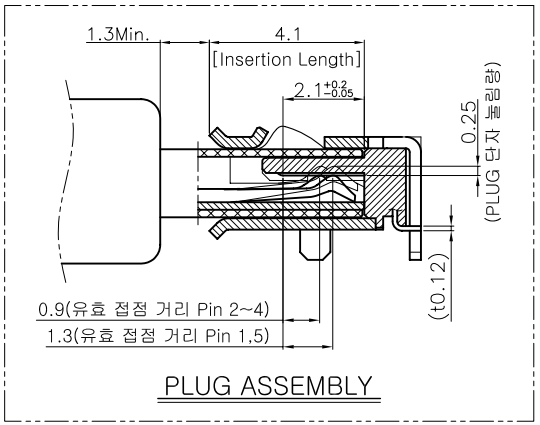

PLUG ASSEMBLY

※ NOTE

1. PLATING
   1) CONTACT
      - Contact Area : Au 0.75㎛ Min over Ni 2.0~5.0㎛.
      - Lead Area : Au 0.05㎛ Min over Ni 0.2~3.0㎛.
   2) METAL COVER : Ni 1.0~5.0㎛.
2. COPLANARITY : 0.08 MAX
3. ☆ : C.T.Q

No	Descriptions	Material	Finish	Remarks
4	METAL COVER	STS304	Note. 1	t0.3
3	GUARD PLATE	STS304	Cleansing	t0.12
2	CONTACT	M702	Note. 1	t0.12
1	HOUSING	LCP	Black Color	UL94V-0

General Tolerance	
Dimension	mm (°)
X	± 0.2
X.X	± 0.1
X.XX	± 0.05
X.XXX	± 0.01
ANGLE	± 1°

Scale N/S	Units mm	Sheet 1 of 1	TITLE	HI05-AG0272 Micro-USB Socket (B)	
Date 2008. 01. 08				Customer Drawing	
Drawn	Design	Checked	Reviewed	Approved	
M. Y. LEE					
HJ&C HYUP JIN I&C CO., LTD.			SW No.		Rev.
			DWG No.	HI05-AG0272-A1	0