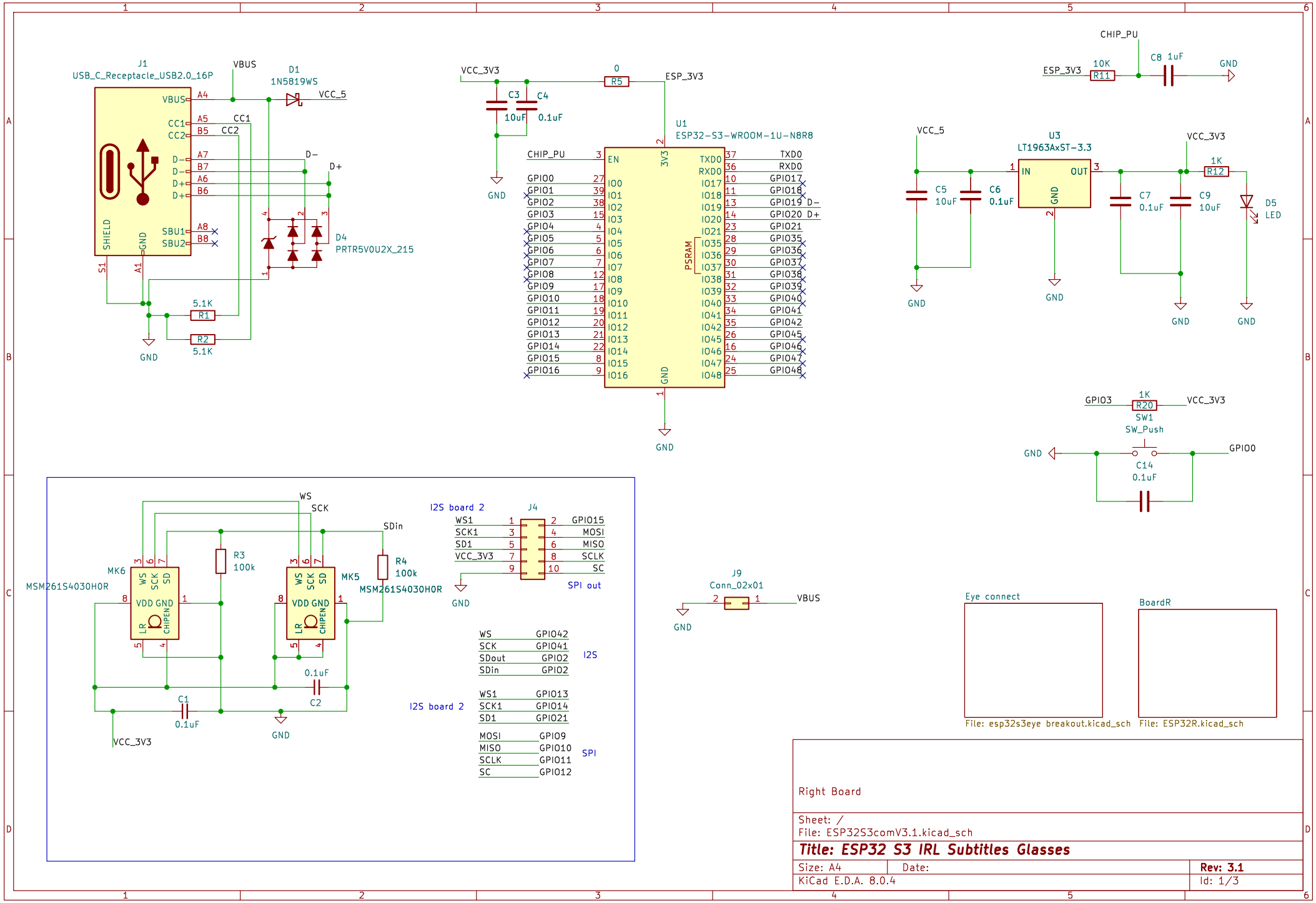
J1
USB_C_Receptacle_USB2.0_16P
VBUS
D1
1N5819WS
VCC_5
CC1
CC2
D−
D+
D4
PRTR5V0U2X_215
SHIELD
GND
S1
A1
5.1K
R1
R2
5.1K
GND
VCC_3V3
C3
10uF
C4
0.1uF
0
R5
ESP_3V3
U1
ESP32-S3-WROOM-1U-N8R8
CHIP_PU
EN
3V3
TXD0
RXD0
GPIO0
GPIO1
GPIO2
GPIO3
GPIO4
GPIO5
GPIO6
GPIO7
GPIO8
GPIO9
GPIO10
GPIO11
GPIO12
GPIO13
GPIO14
GPIO15
GPIO16
GPIO17
GPIO18
GPIO19 D−
GPIO20 D+
GPIO21
GPIO35
GPIO36
GPIO37
GPIO38
GPIO39
GPIO40
GPIO41
GPIO42
GPIO45
GPIO46
GPIO47
GPIO48
PSRAM
GND
CHIP_PU
ESP_3V3
10K
R11
C8 1uF
GND
VCC_5
C5
10uF
C6
0.1uF
U3
LT1963AxST-3.3
IN
OUT
GND
VCC_3V3
C7
0.1uF
C9
10uF
1K
R12
D5
LED
GND
GPIO3
1K
R20
VCC_3V3
SW1
SW_Push
GND
GPIO0
C14
0.1uF
MK6
MSM261S4030H0R
WS
SCK
SD
VDD GND
LR
CHIPEN
R3
100k
MK5
MSM261S4030H0R
SDin
R4
100k
0.1uF
C2
C1
0.1uF
VCC_3V3
GND
I2S board 2
J4
WS1
SCK1
SD1
VCC_3V3
GPIO15
MOSI
MISO
SCLK
SC
SPI out
WS GPIO42
SCK GPIO41
SDout GPIO2
SDin GPIO2
I2S
I2S board 2
WS1 GPIO13
SCK1 GPIO14
SD1 GPIO21
MOSI GPIO9
MISO GPIO10
SCLK GPIO11
SC GPIO12
SPI
J9
Conn_02x01
VBUS
Eye connect
File: esp32s3eye breakout.kicad_sch
BoardR
File: ESP32R.kicad_sch
Right Board
Sheet: /
File: ESP32S3comV3.1.kicad_sch
Title: ESP32 S3 IRL Subtitles Glasses
Size: A4
Date:
Rev: 3.1
KiCad E.D.A. 8.0.4
Id: 1/3

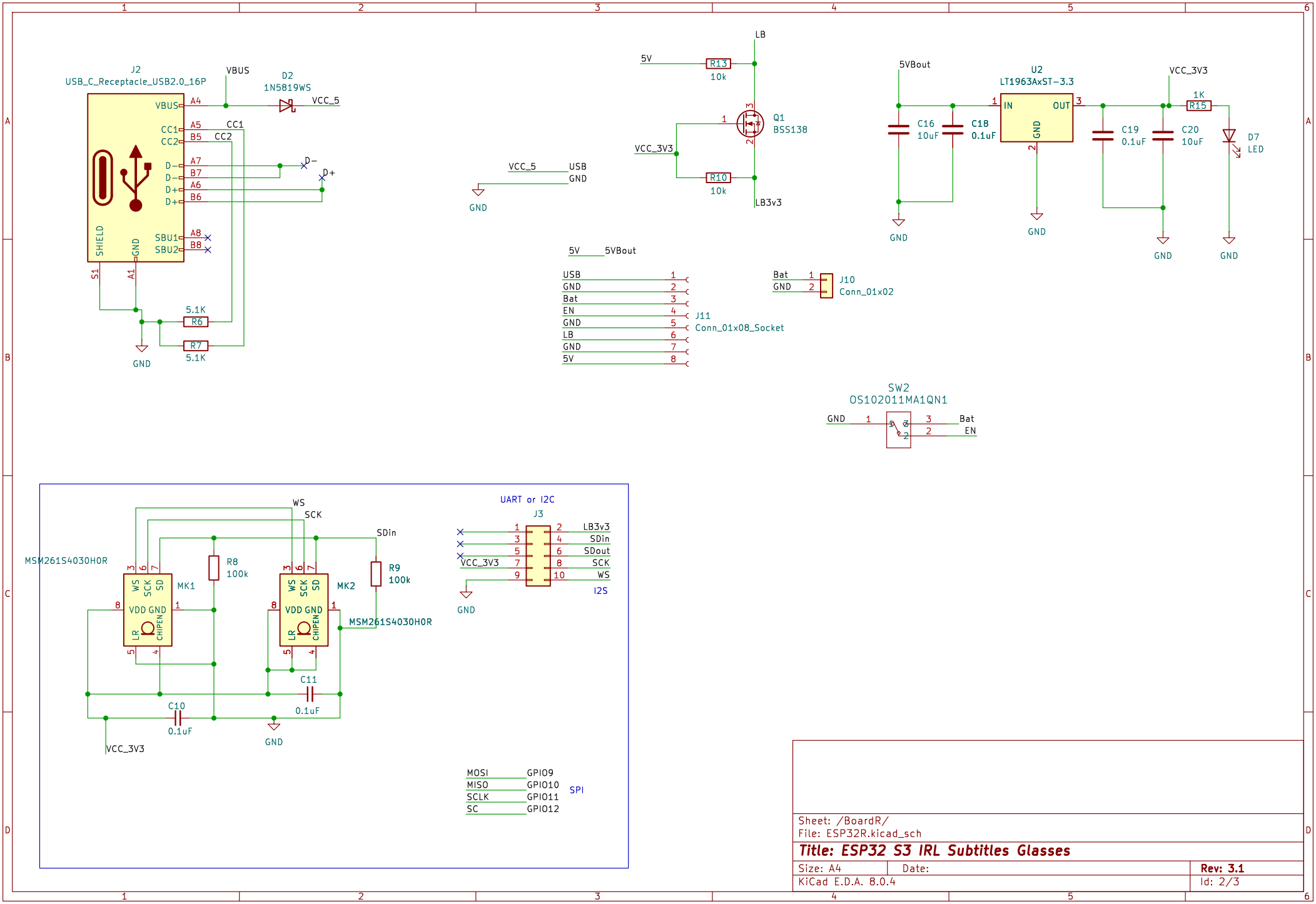

Sheet: /BoardR/
File: ESP32R.kicad_sch

Title: ESP32 S3 IRL Subtitles Glasses

Size: A4	Date:	Rev: 3.1
KiCad E.D.A. 8.0.4		Id: 2/3

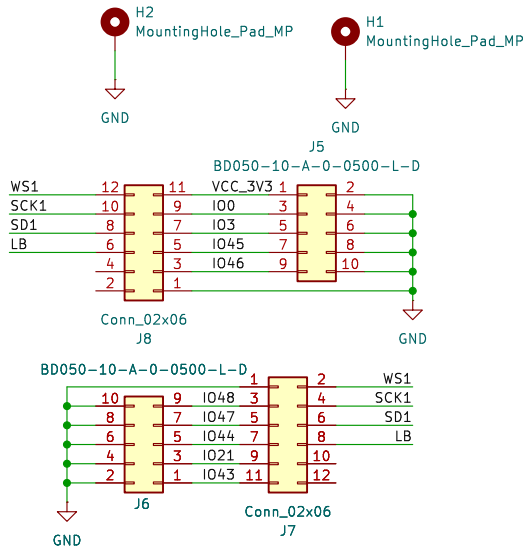

Sheet: /Eye connect/
File: esp32s3eye breakout.kicad_sch

Title: ESP32 S3 IRL Subtitles Glasses

Size: A4	Date:	**Rev: 3.1**
KiCad E.D.A. 8.0.4		Id: 3/3