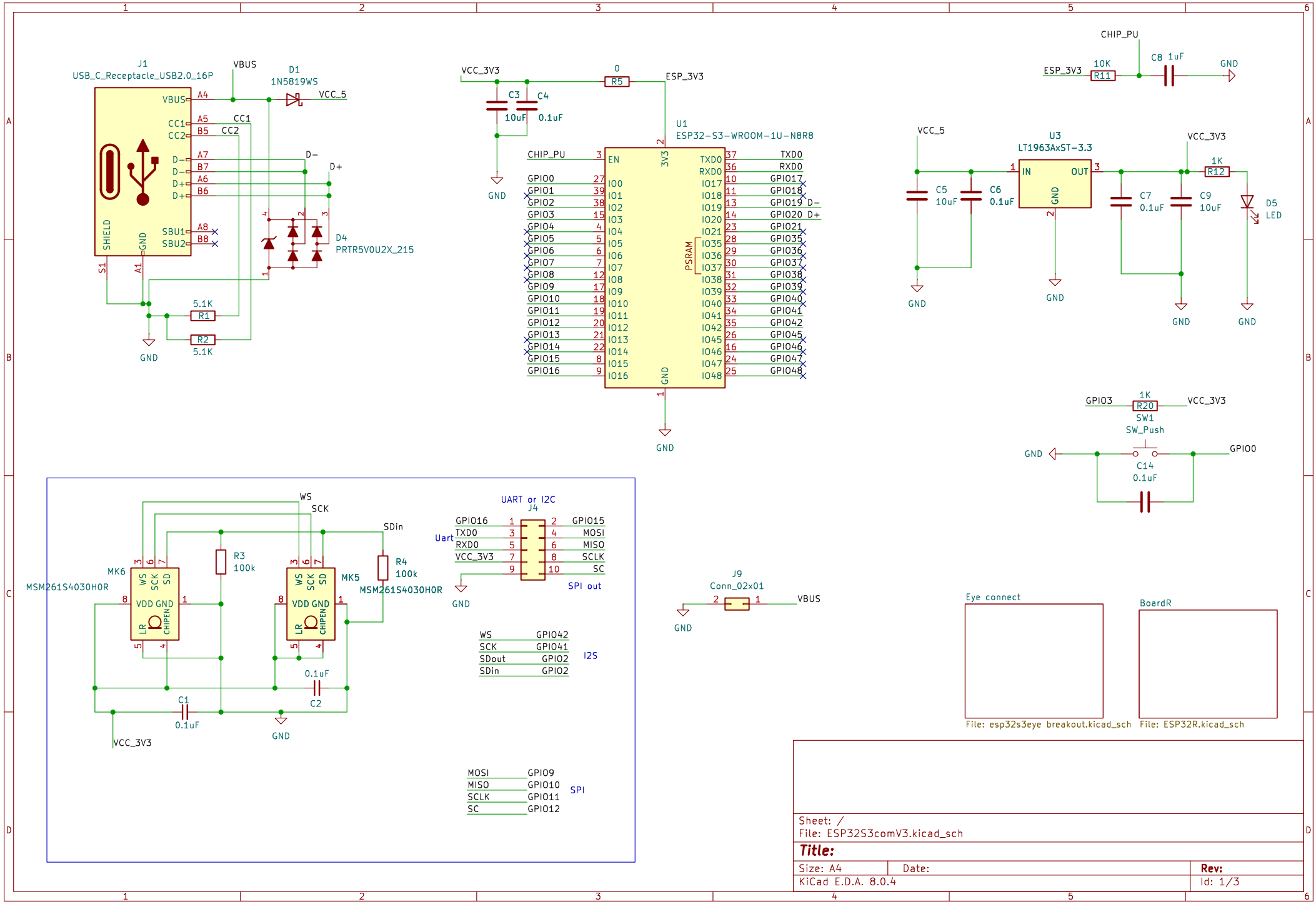
J1
USB_C_Receptacle_USB2.0_16P
VBUS
D1
1N5819WS
VCC_5
CC1
CC2
D−
D+
D4
PRTR5V0U2X_215
SHIELD
GND
S1
A1
5.1K
R1
R2
5.1K
GND
VCC_3V3
C3
C4
10uF
0.1uF
0
R5
ESP_3V3
U1
ESP32-S3-WROOM-1U-N8R8
CHIP_PU
EN
3V3
GND
TXD0
RXD0
GPIO17
GPIO18
GPIO19
GPIO20
GPIO21
GPIO35
GPIO36
GPIO37
GPIO38
GPIO39
GPIO40
GPIO41
GPIO42
GPIO45
GPIO46
GPIO47
GPIO48
PSRAM
GPIO0
GPIO1
GPIO2
GPIO3
GPIO4
GPIO5
GPIO6
GPIO7
GPIO8
GPIO9
GPIO10
GPIO11
GPIO12
GPIO13
GPIO14
GPIO15
GPIO16
CHIP_PU
ESP_3V3
10K
R11
C8 1uF
GND
VCC_5
U3
LT1963AxST-3.3
IN
OUT
GND
C5
10uF
C6
0.1uF
C7
0.1uF
C9
10uF
VCC_3V3
1K
R12
D5
LED
GPIO3
1K
R20
VCC_3V3
SW1
SW_Push
GND
GPIO0
C14
0.1uF
MK6
MSM261S4030H0R
WS
SCK
SD
VDD
GND
LR
CHIPEN
R3
100k
MK5
MSM261S4030H0R
SDin
R4
100k
0.1uF
C2
C1
0.1uF
VCC_3V3
GND
UART or I2C
J4
GPIO16
TXD0
RXD0
VCC_3V3
GPIO15
MOSI
MISO
SCLK
SC
Uart
SPI out
GND
WS GPIO42
SCK GPIO41
SDout GPIO2
SDin GPIO2
I2S
MOSI GPIO9
MISO GPIO10
SCLK GPIO11
SC GPIO12
SPI
J9
Conn_02x01
VBUS
GND
Eye connect
File: esp32s3eye breakout.kicad_sch
BoardR
File: ESP32R.kicad_sch
Sheet: /
File: ESP32S3comV3.kicad_sch
Title:
Size: A4
Date:
Rev:
KiCad E.D.A. 8.0.4
Id: 1/3

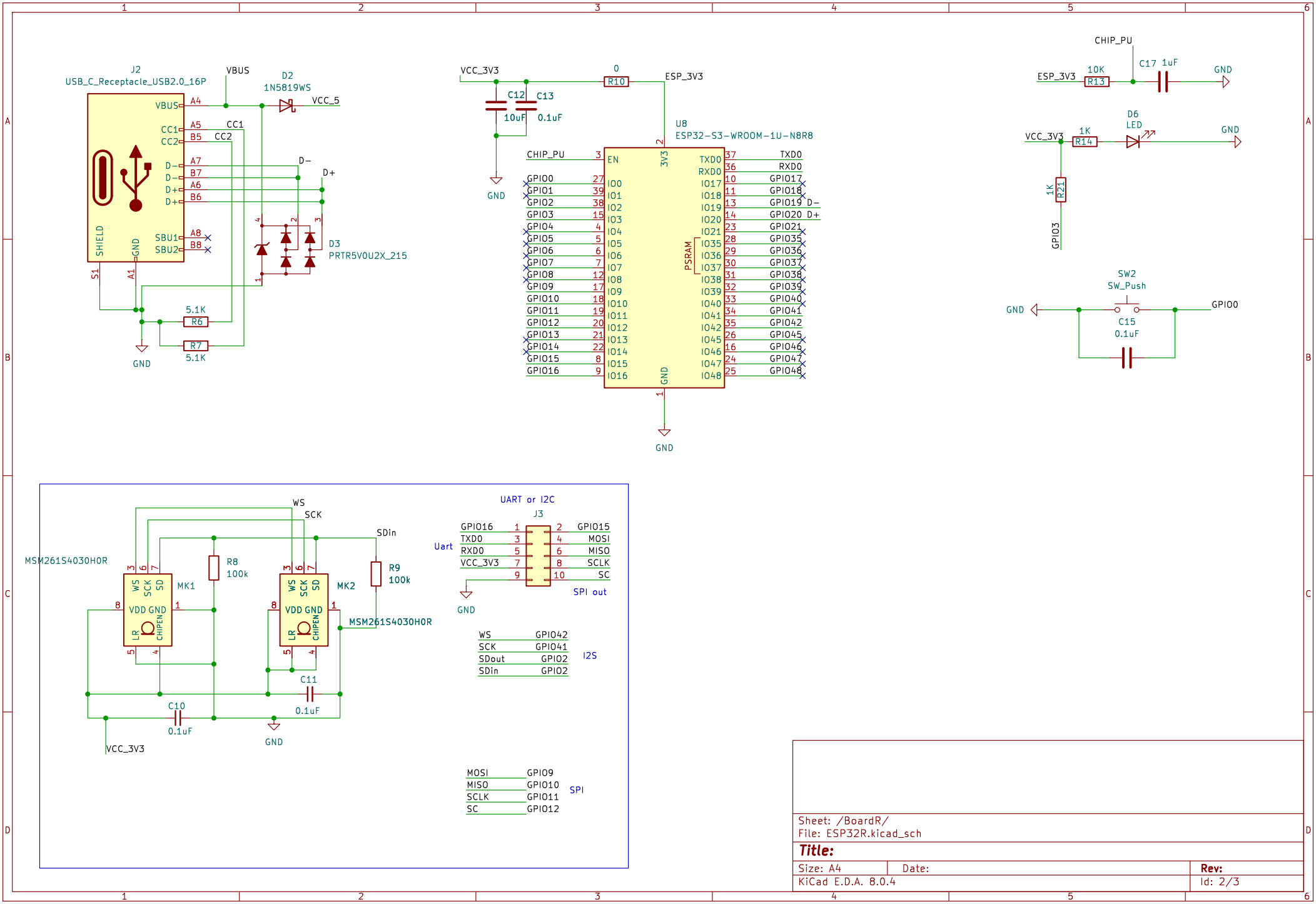

Sheet: /BoardR/
File: ESP32R.kicad_sch

Title:

Size: A4	Date:	Rev:
KiCad E.D.A. 8.0.4		Id: 2/3

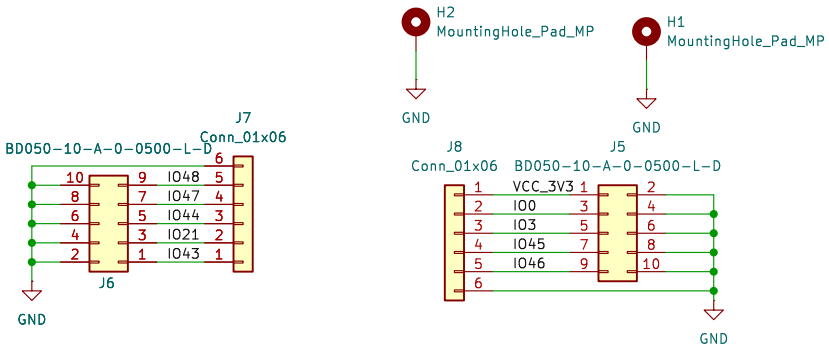

Sheet: /Eye connect/
File: esp32s3eye breakout.kicad_sch

Title:

Size: A4	Date:	**Rev:**
KiCad E.D.A. 8.0.4		Id: 3/3