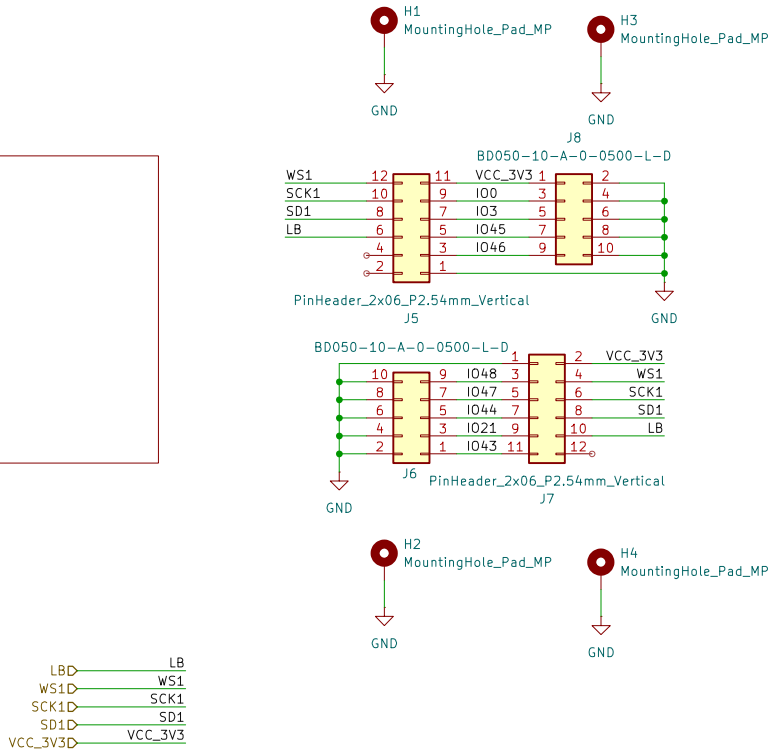

Passthough board for right and left board
Eye Connector Board
OSHE – IRL Sub-Titles

Sheet: /
File: ESP32S3comV3.2.kicad_sch

Title: ESP32 S3 IRL Subtitles Glasses

Size: A4	Date: 2025-03-06	**Rev: 3.2**
KiCad E.D.A. 8.0.4		Id: 1/3

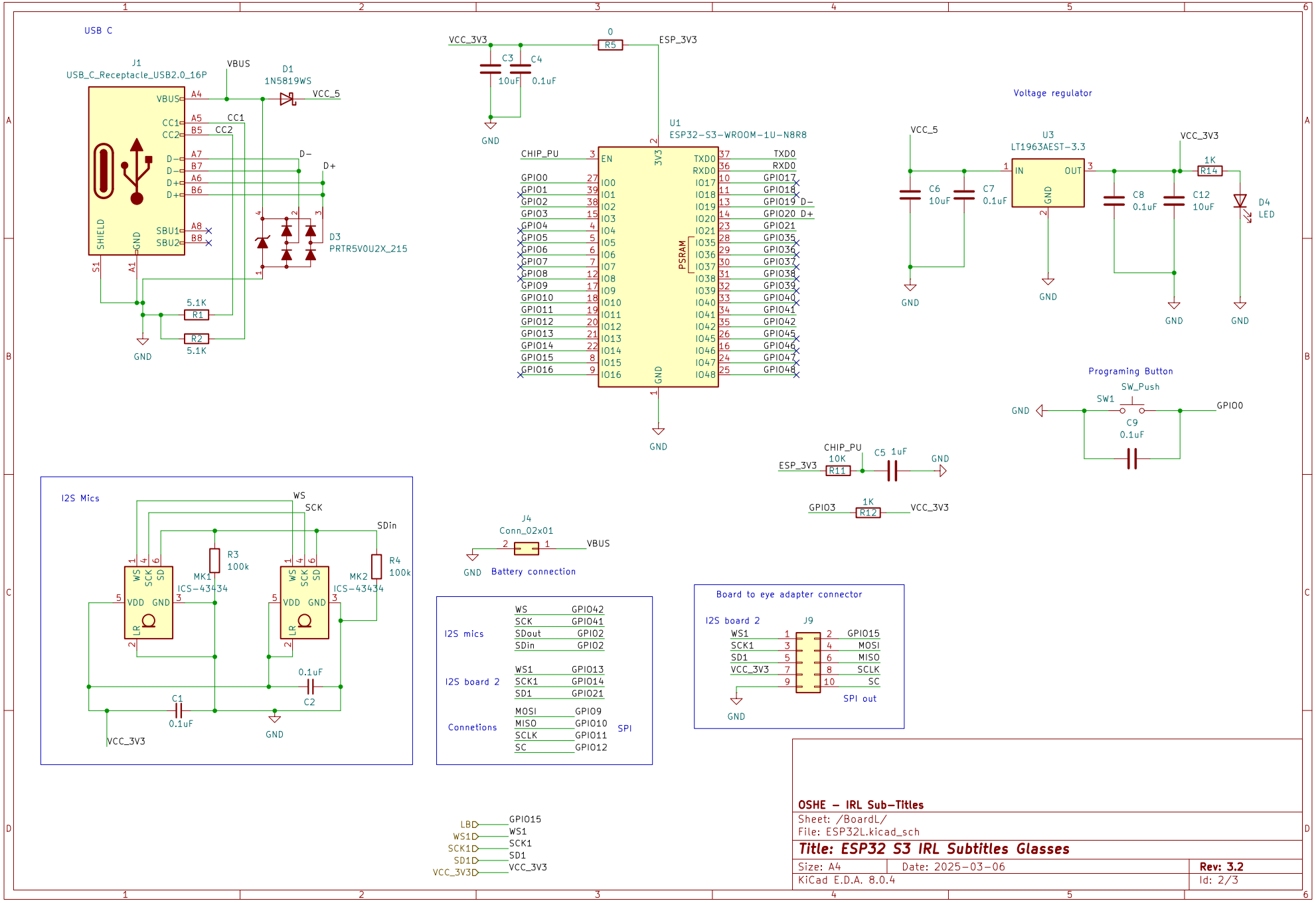

OSHE – IRL Sub-Titles

Sheet: /BoardL/

File: ESP32L.kicad_sch

Title: ESP32 S3 IRL Subtitles Glasses

Size: A4	Date: 2025-03-06	**Rev: 3.2**
KiCad E.D.A. 8.0.4		Id: 2/3

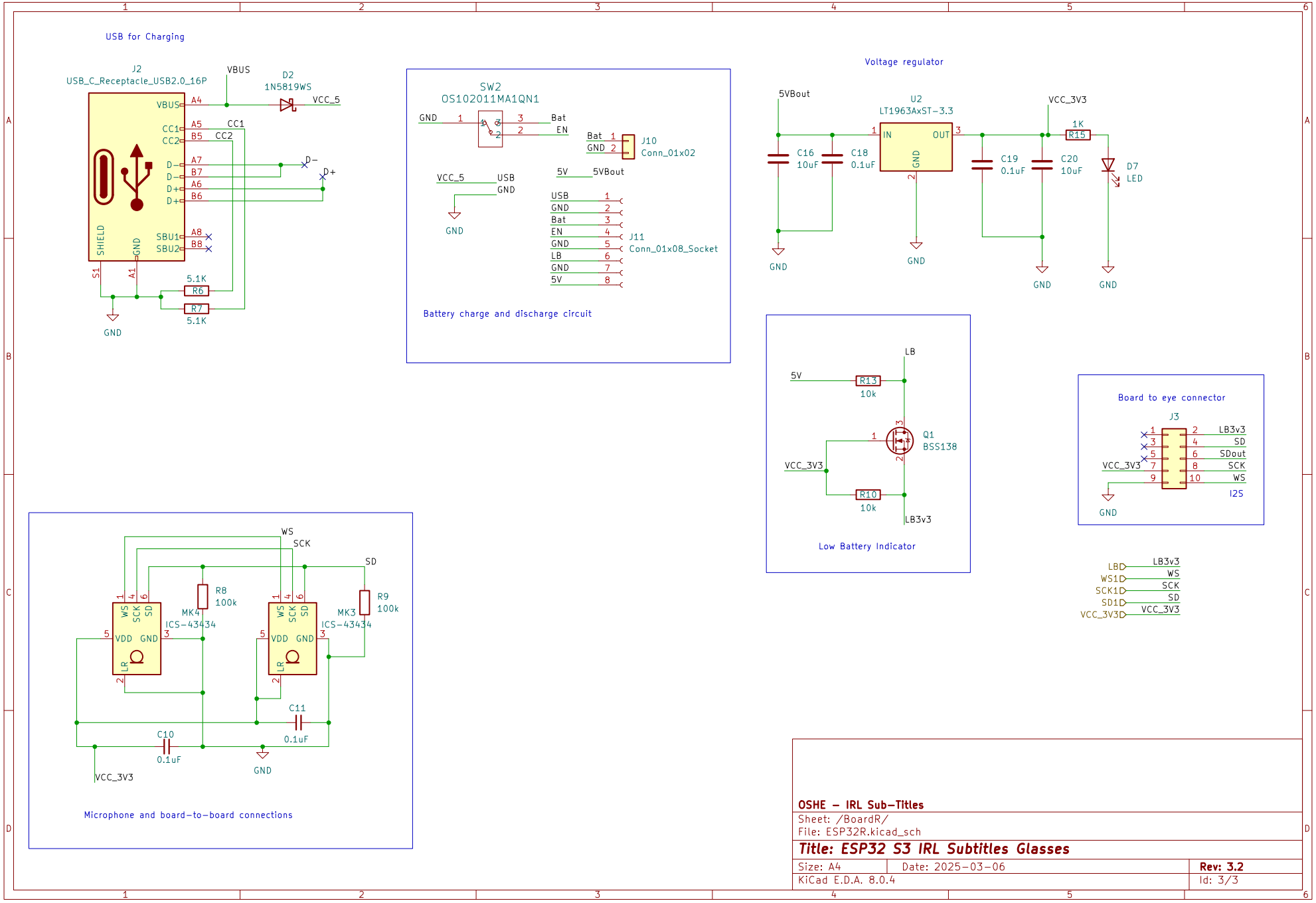

OSHE – IRL Sub-Titles

Sheet: /BoardR/

File: ESP32R.kicad_sch

Title: ESP32 S3 IRL Subtitles Glasses

Size: A4	Date: 2025-03-06	**Rev: 3.2**
KiCad E.D.A. 8.0.4		Id: 3/3