Rethinking Metric Symmetry in Person Re-Identification via Unified Finsler Geometry

Lee Zhuo Le
Technical University of Munich
zhuole.lee@tum.de

Thomas Dagès
Technical University of Munich
tom.dages@tum.de

Simon Weber
University of Oxford
simon.weber@cs.ox.ac.uk

Abstract

Domain-generalizable person re-identification (DG-ReID) often optimizes symmetric distances on Euclidean embeddings together with objectives that encourage domain invariance. Yet probe-to-gallery retrieval in heterogeneous camera networks is not always well modeled as a symmetric comparison: viewpoint, resolution, and sensing pipelines can induce direction-dependent mismatch that a single symmetric metric may compress or discard. We study asymmetric, Randers/Finsler-style retrieval scores on top of alignment–uniformity training [4], using a structured representation that separates an identity factor from a drift factor while keeping the backbone geometry explicitly Euclidean. We first revisit explicit disentanglement with auxiliary nuisance-aligned constraints and analyze why, in our setting, such objectives can conflict with domain-invariant pressures and destabilize generalization. We then formulate a unified asymmetric scoring layer (identity chord distance plus drift-mediated directional cost) with norm-constrained drift initialization and barrier regularization so training starts in a near-Euclidean regime and moves off it only when supported by the loss landscape. In the standard multi-source DG-ReID setting with CUHK03 as the target domain, five-seed mean performance is $43.8 \pm 0.3\%$ *mAP; the protocol-matched single-seed rerun reports* 44.3% *mAP and* 44.8% *Rank-1 (*$+1.9\%$ *mAP vs. a configuration-matched Euclidean baseline). The results suggest that drift-subspace variance regularization, not explicit domain-mining auxiliaries, is the critical ingredient for stable asymmetric retrieval under BAU-style training. Code is available at* https://github.com/leezhuole/Manifold-Aware-Person-Re-Identification.

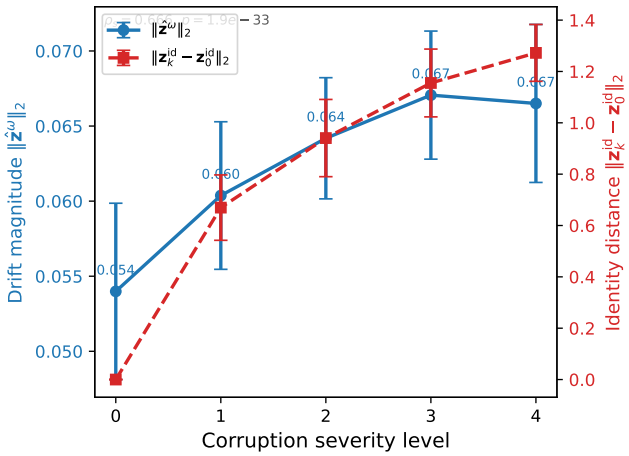

Figure 1. Drift magnitude $\|\hat{\mathbf{z}}^{\omega}\|_2$ (left axis) and identity-slice displacement from the clean reference $\|\mathbf{z}_k^{\mathrm{id}} - \mathbf{z}_0^{\mathrm{id}}\|_2$ (right axis) vs. corruption severity $k \in \{0, \ldots, 4\}$ on the primary residual-drift Arm 1b checkpoint.

1. Introduction

Domain-generalizable person re-identification (DG-ReID) learns representations from multiple labeled source domains that can generalize to unseen target domains without additional fine-tuning [4]. Practical deployments mix resolutions, viewpoints, and camera parameters; much of the literature therefore stresses *domain-invariant* features—often by separating identity-discriminative cues from domain-specific appearance via normalization [12, 16], meta-learned domain-invariant mapping [5, 18], or disentanglement-style factorizations [25] (see Sec. 2). These approaches typically still rank with symmetric distances on Euclidean embeddings, including cosine- or spherical-normalized views.

We focus on a complementary modeling choice: **direction-aware retrieval** when probe-to-gallery matching is not symmetric in deployment (e.g., aerial-to-ground or cross-modality RGB-to-infrared). Symmetric distances

impose $d(\mathbf{x}, \mathbf{y}) = d(\mathbf{y}, \mathbf{x})$, which may be an acceptable abstraction for bidirectional search but can discard ordered degradation patterns across domains. It treats probe→gallery and gallery→probe as interchangeable when the operative query direction is fixed at test. Our goal is not to dismiss invariance-based DG-ReID, but to ask when an asymmetric score—viewed through a Randers/Finsler lens [1]—better matches that directional geometry than a symmetric surrogate.

Building on Balancing Alignment and Uniformity (BAU) [4], we introduce (i) a structured embedding with an identity factor and an orthogonalized drift factor, and (ii) an asymmetric distance on those factors with a bounded learnable weight that interpolates toward the Euclidean triplet regime. This keeps the representation geometry transparent: features remain Euclidean while asymmetry enters exclusively through the pairwise scoring function.

We first study explicit disentanglement with nuisance-aligned auxiliary objectives on the drift factor. In our training stack, such objectives can interfere with domain-invariant terms: a failure mode analyzed in Sec. 3.7 and a cautionary datapoint for "hard" disentanglement. That analysis motivates retaining a single continuous feature map while letting asymmetry enter through the scoring function and a stable triplet parameterization.

Our main contributions are summarized as follows: (i) we foreground asymmetric probe–gallery matching alongside domain invariance as a complementary design axis; (ii) we instantiate a Randers/Finsler-style asymmetric score on a split identity/drift representation with norm-constrained drift that recovers Euclidean geometry at initialization, atop BAU-style alignment and uniformity training; (iii) we analyze how strong nuisance alignment in the drift factor can clash with domain-invariant losses; (iv) we empirically stress-test the full scoring stack under fixed multi-source protocols, including the cross-camera drift coherence loss $\mathcal{L}_{\text{dcc}}$ (Sec. 3.5); (v) we report an auxiliary-loss sweep that selects a primary training recipe and documents which multi-target and cross-view evaluations are still outstanding (Sec. 4).

2. Related Work

2.1. Domain-generalizable person re-identification

DG-ReID methods often seek domain-invariant embeddings that transfer to unseen target cameras without fine-tuning. Instance normalization and hybrids such as IBN-Net [16] and style-normalization variants SNR [12] attempt to filter out domain-specific style variations by manipulating feature statistics. Similarly, domain-alignment and meta-learning formulations [5, 18] explicitly optimize for feature representations that minimize divergence across seen source domains. Balancing Alignment and Uniformity (BAU) [4] instantiates the alignment-uniformity framework of Wang and Isola [19] for multi-source ReID, explicitly balancing alignment and uniformity on originals and augmentations while adding domain-specific uniformity to exploit augmentation without collapsing out-of-distribution structure. Collectively, these approaches emphasize suppressing domain-specific factors while sharing a common retrieval convention: symmetric distances on Euclidean (or cosine-normalized) features, which is natural when a single bidirectional gallery score is the operational target.

2.2. Retrieval geometry

Batch-hard triplet and proxy losses for ReID are almost universally built from symmetric distances [10]. Cross-modality settings (e.g., RGB–infrared) motivate directional or modality-specific heads and losses [21], where the asymmetry arises from sensor heterogeneity. A separate line replaces Euclidean feature space with non-Euclidean intrinsic geometry: hyperbolic embeddings [13] and hyperspherical manifold methods [8] modify the intrinsic geometry of the representation space itself for metric learning and retrieval. A fourth design axis keeps a standard Euclidean feature map and injects direction dependence in the pairwise score rather than in the geodesics of the embedding space; Finsler-MDS [7] is a recent example of this template (see Sec. 3.2).

2.3. Feature disentanglement

Disentangling identity from style or domain factors appears in both generative and discriminative pipelines. Generative approaches such as DG-Net [25] and MUNIT [11] use adversarial image synthesis to swap identity and style codes. While effective at isolating appearance factors, GAN training is resource-intensive and the learned subspaces do not typically yield strict mutual statistical independence in practice.

Discriminative approaches apply dedicated identity and nuisance losses within a shared backbone [12], avoiding image synthesis. In both families, orthogonality constraints are inductive biases and do not guarantee strict factorization in practice. In joint training with strong domain-invariance terms, gradients from nuisance-focused objectives can oppose invariance pressures on shared representations—a tension in multi-task metric learning that is distinct from the theoretical question of whether disentanglement is desirable.

2.4. Randers-Finsler geometry

Classical Randers metrics. A Randers metric combines a Riemannian quadratic piece and a linear drift in the tangent direction: $F_x(u) = \sqrt{u^\top M(x)\, u} + \omega(x)^\top u$, with positivity ensured by $\|\omega(x)\|_{M(x)^{-1}} < 1$ [1, 17]. The Riemannian (symmetric) case is $\omega \equiv 0$; the drift term ω breaks symmetry by making traversal cost depend on direction.

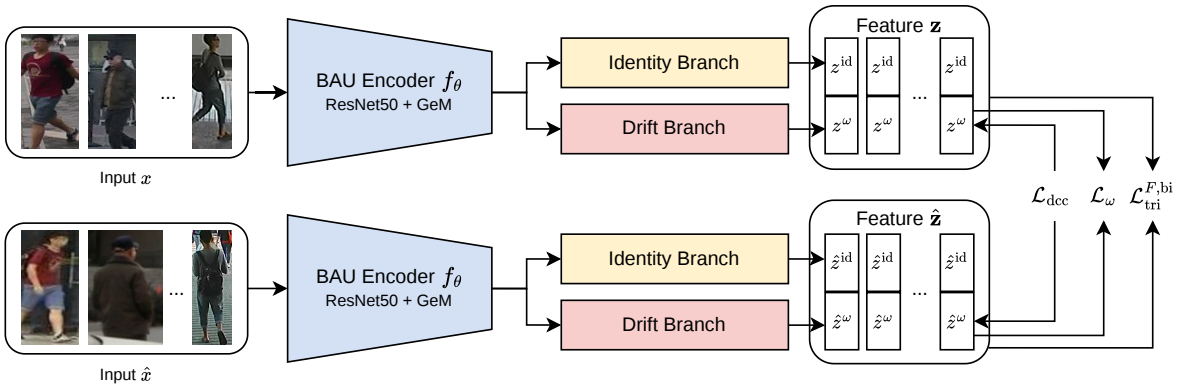

Figure 2. **Finsler BAU framework.** Two image streams $\mathbf{x}$ and $\hat{\mathbf{x}}$ depict the same identity observed under different camera conditions; both pass through the shared backbone and drift head. *Right:* loss terms acting on each component. $\mathcal{L}_{\mathrm{dcc}}$ (eq. 10) penalises L2 dispersion between drift vectors ω_i, ω_j for same-identity, different-camera pairs. $\mathcal{L}_{\omega}$ (eq. 9) enforces the Randers positivity constraint on *all* drift vectors. The bidirectional Finsler triplet $\mathcal{L}_{\mathrm{tri}}^{\mathrm{bi}}$ (eq. 7) mines hard pairs in both query directions on the full structured embedding $[\mathbf{z}^{\mathrm{id}}; \hat{\mathbf{z}}^{\omega}]$.

Finsler multi-dimensional scaling (Finsler-MDS). Finsler MDS [7] embeds asymmetric dissimilarities into a flat canonical Randers space on $\mathbb{R}^m$: a uniform drift $\omega \in \mathbb{R}^m$ with $\alpha \equiv \|\omega\|_2 < 1$ defines

$$F_x^C(u) = \|u\|_2 + \omega^\top u, \tag{1}$$

with straight Euclidean segments as geodesics but direction-dependent traversal length. The canonical Randers distance is then

$$d_{F^C}(x, y) = \|y - x\|_2 + \omega^\top (y - x), \tag{2}$$

so $d_{F^C}(y, x) \neq d_{F^C}(x, y)$ when $\omega \neq 0$, and $\omega = 0$ recovers Euclidean distance [7]. The additive form—Euclidean chord plus a linear functional of the displacement—yields a closed-form asymmetric cost amenable to MDS stress minimization and graph embedding. Extensions to learned or position-dependent drift fields must satisfy integrand-level regularity conditions to define genuine Finsler metrics [1].

2.5. Asymmetric domain shift.

Cross-modal and viewpoint-heterogeneous ReID violate the idealization that "domain distance" is symmetric under query reversal. Visible-infrared retrieval is inherently directional because sensor physics induce irreversible information loss [21]; SYSU-MM01 reports RGB→IR and IR→RGB separately with nontrivial Rank-1 gaps between directions. Aerial-to-ground benchmarks on AG-ReID.v2 likewise use directional probe-gallery splits, and performance depends on which view is queried [15]. For generic degradations, the data processing inequality makes the asymmetry formal: a lossy channel cannot be inverted, so clean→corrupted information loss typically dominates the reverse [6]. These observations motivate treating probe→gallery scoring as directed, which we instantiate in Sec. 3.

The preceding threads share a gap: none simultaneously (a) operates within a standard DG-ReID training recipe, (b) keeps the backbone representation Euclidean, and (c) introduces direction-dependent retrieval costs through an outer asymmetric score rather than through intrinsic embedding geometry or modality-specific fusion. We build on BAU [4] as the invariance backbone and adopt the displacement-linear template of d_{F^C} for the scoring layer (see Sec. 3.2).

3. Methodology

We augment BAU-style alignment-uniformity training [4] with asymmetric retrieval geometry. This section defines the core representation and scoring function (§3.1–3.2), the two drift-head designs compared throughout (§3.3), the training objective and its primary recipe (§3.4), drift regularization including the primary auxiliary loss (§3.5), domain-space losses (§3.6), and the objective interference analysis that motivates the primary recipe (§3.7).

3.1. Structured embedding

The backbone produces $\mathbf{z} = [\mathbf{z}^{\mathrm{id}}; \mathbf{z}^{\omega}]$: an identity component $\mathbf{z}^{\mathrm{id}} \in \mathbb{R}^{d_{\mathrm{id}}}$ and a drift component $\mathbf{z}^{\omega} \in \mathbb{R}^{d_{\omega}}$ encoding camera/domain shift, with $d = d_{\mathrm{id}} + d_{\omega}$. A Gram-Schmidt step removes the identity-parallel component of the drift: $\hat{\mathbf{z}}^{\omega} = \mathbf{z}^{\omega} - (\mathbf{z}^{\omega} \cdot \hat{\mathbf{z}}^{\mathrm{id}})\hat{\mathbf{z}}^{\mathrm{id}}$, where $\hat{\mathbf{z}}^{\mathrm{id}}$ is the ℓ_2-normalized identity feature. Without this projection, drift collinear with identity ($\mathbf{z}^{\omega} \approx \beta \hat{\mathbf{z}}^{\mathrm{id}}$) reduces the asymmetry term in (4) to a scaled Euclidean distance, losing directional expressiveness. This mirrors the shared-private decomposition of [2];

it is an inductive bias, not a guarantee of statistical independence (see Supp. 12).

Geometric properties of the drift factor. The sigmoid-gated scaling in Sec. 3.3 ensures $\|\tilde{\mathbf{z}}^{\omega}\|_2 < c_{\max} = 0.95$ before orthogonalization. Since the Gram-Schmidt step cannot increase the norm, the post-projection drift lies in the open ball $\hat{\mathbf{z}}^{\omega} \in B^{d_\omega}(\mathbf{0}, c_{\max})$, satisfying the Randers positivity condition $\|\omega\| < 1$ required in Sec. 3.2. Despite geometric confinement, identity and drift are not statistically independent: the Jacobian $\partial\hat{\mathbf{z}}^{\omega}/\partial\hat{\mathbf{z}}^{\mathrm{id}} \neq \mathbf{0}$ in general, since the projector $\Pi^{\perp}_{\hat{\mathbf{z}}^{\mathrm{id}}}$ depends on $\hat{\mathbf{z}}^{\mathrm{id}}$, and both factors derive from the same backbone output $\mathbf{h}$. Two concrete channels for residual identity leakage are: gradient coupling via the backbone, and finite-capacity drift in the orthogonal complement (analyzed in Supp. 12).

3.2. Randers-type asymmetric distance

Euclidean baseline. Standard ReID pipelines construct a symmetric metric space via batch-hard triplet loss [10]; we retain this formulation as the controlled ablation reference. Let $f_\theta : \mathcal{X} \to \mathbb{R}^d$ map an image $\mathbf{x}_i$ to an L_2-normalized embedding $\mathbf{z}_i$:

$$\mathcal{L}_{tri} = \frac{1}{|\mathcal{B}|}\sum_{i\in\mathcal{B}}\Bigg[\max_{p:y_p=y_i} d_E(\mathbf{z}_i,\mathbf{z}_p) - \min_{n:y_n\neq y_i} d_E(\mathbf{z}_i,\mathbf{z}_n) + m\Bigg]_+ , \quad (3)$$

where $[\cdot]_+ = \max(\cdot, 0)$, $d_E(\mathbf{u},\mathbf{v}) = \|\mathbf{u}-\mathbf{v}\|_2$, and $m>0$ is the margin. Setting $\hat{\mathbf{z}}^{\omega}=\mathbf{0}$ in the distance below recovers d_E on the identity slice.

Randers-type distance. We replace the global drift in the canonical Randers form (eq. 2) with the midpoint of the two endpoint drifts and restrict displacement to the identity subspace:

$$d_F(\mathbf{x},\mathbf{y}) = \|\mathbf{x}^{\mathrm{id}}-\mathbf{y}^{\mathrm{id}}\|_2 + \langle 1/2(\mathbf{x}^{\omega}+\mathbf{y}^{\omega}), \mathbf{y}^{\mathrm{id}}-\mathbf{x}^{\mathrm{id}}\rangle. \quad (4)$$

The midpoint drift is a trapezoidal approximation to the path integral along the identity chord. Eq. (4) borrows the closed-form asymmetric template of d_{F^C} without claiming a globally valid Randers metric on feature space. When $d_\omega < d_{\mathrm{id}}$, the asymmetry term is geometrically suppressed by $\sqrt{d_\omega/d_{\mathrm{id}}}$; a correction $\gamma = d_{\mathrm{id}}/d_\omega$ restores approximate magnitude parity (derivation in Supp. 13).

Randers positivity constraint. Randers positive-definiteness requires $\|\mathbf{z}^{\omega}\|_2 < 1$ (the flat-space specialization of $\|\omega\|_{M^{-1}} < 1$ [1]). Violation permits $d_F < 0$ for displacements anti-aligned with ω, producing non-physical negative scores that destabilize triplet mining. We enforce the constraint with sigmoid-gated norm scaling (Sec. 4.2) and a log-barrier penalty (Sec. 3.5); see Supp. 9 for alternatives evaluated.

Identity-only alignment. The BAU alignment loss [4] minimizes $\|f_s - f_w\|_2^2$ between augmented views. Aligning the full embedding forces $\omega_s \approx \omega_w$, collapsing drift to augmentation-invariant values and destroying the asymmetric signal that augmentations are meant to induce. We restrict alignment to the identity slice:

$$\mathcal{L}_{\mathrm{align}} = \sum_{i\in\mathcal{B}} w_i \cdot \|\mathbf{z}^{\mathrm{id}}_{s,i} - \mathbf{z}^{\mathrm{id}}_{w,i}\|_2^2 , \quad (5)$$

where w_i are reciprocal k-NN Jaccard weights [4, 26] computed on identity features only. The uniform loss is similarly restricted to $\mathbf{z}^{\mathrm{id}}$, preventing drift magnitude from biasing the repulsion kernel.

3.3. Drift-head design variants

We implement two alternative drift-head designs and evaluate both on the same experimental arms. Per-arm results are reported under two columns: **res.** (residual drift) and **dom-proto.** (domain-prototype drift).

Residual drift. A two-layer MLP (hidden dimension $d_{\mathrm{id}}/2 = 1024$ for d_{id}=2048; no bias) maps pre-BN pooled backbone features directly to a d_ω-dimensional drift vector. The output layer is initialized with $\mathcal{N}(0, 10^{-3})$ weights so drift begins near zero. The MLP operates without domain labels or domain-routing signals, learning a free, per-sample directional correction that we call $\omega_{\mathrm{res}}(\mathbf{x})$.

Domain-prototype drift. The domain-prototype head produces a drift vector as a convex combination of S learnable domain-prototype embeddings weighted by soft domain probabilities, modulated by a sigmoid gate and augmented by a small residual MLP correction. Concretely, a linear classifier on a detached copy of the post-BN identity features produces domain logits over S source domains. At training time the classifier is supervised via the auxiliary cross-entropy $\mathcal{L}_{\text{dom-tok}}$ against the known source-domain label; the domain prior uses a one-hot selection so that ground-truth routing is used during optimization. At test time the soft-probability path activates: logits are converted via temperature-scaled softmax to domain probabilities $p_s(\mathbf{x})$, producing a convex combination of S learnable prototype embeddings $\mathbf{e}_s \in \mathbb{R}^{d_e}$ (d_e=64). The weighted prototype is projected to drift space and modulated by a sigmoid gate, yielding $\omega_{\mathrm{dom}}(\mathbf{x})$. The stop-gradient isolates identity-backbone parameters from the domain-classifier

cross-entropy signal; the drift projection head receives gradients from both. The final drift combines the domain prior and the per-sample residual correction:

$$\omega(\mathbf{x}) = \omega_{\mathrm{dom}}(\mathbf{x}) + \lambda\, \omega_{\mathrm{res}}(\mathbf{x}) \ , \quad \lambda = 0.1 \ , \tag{6}$$

where ω_{res} shares the same two-layer MLP architecture as the residual drift head. Full equations for ω_{dom} appear in Supp. 16.

Relationship between the two designs. The residual drift variant is eq. (6) with λ=1 and $\omega_{\mathrm{dom}} \equiv \mathbf{0}$: drift equals the unconstrained per-sample MLP output. The domain-prototype variant adds a structured domain prior and reduces the residual scale to λ=0.1. Both variants apply the same Gram-Schmidt orthogonalization (§3.1) and sigmoid-gated norm scaling (§4.2) after the drift is computed. The sigmoid scaling asymptotically bounds the pre-orthogonalization drift norm below $c_{\max}$=0.95; the Gram-Schmidt step reduces the norm further but the post-orthogonalization bound is not explicitly re-enforced.

3.4. Training objective

Triplet mining modes. Unified Finsler triplet applies the batch-hard hinge of eq. (3) with d_F on the full structured embedding $[\mathbf{z}^{\mathrm{id}}; \hat{\mathbf{z}}^{\omega}]$, so triplet gradients shape both identity and drift factors jointly. **Identity-sliced triplet** applies the same hinge with d_E on $\mathbf{z}^{\mathrm{id}}$ only; other BAU terms may still use the full embedding (e.g., $\mathcal{L}_{\mathrm{dom}}$ on $[\mathbf{z}^{\mathrm{id}}; \hat{\mathbf{z}}^{\omega}]$). Unless noted, "unified" refers to the joint mining objective paired with identity-only alignment and uniformity on $\mathbf{z}^{\mathrm{id}}$ (Sec. 3.2).

Bidirectional Finsler triplet. Under asymmetric d_F, $d_F(i,p) \neq d_F(p,i)$ in general, so mining over $D_{ij} = d_F(\mathbf{z}_i, \mathbf{z}_j)$ alone does not enforce margin separation in the reverse direction. Since query direction is unknown at test time, the primary recipe averages the forward and reverse losses:

$$\mathcal{L}_{\mathrm{tri}}^{\mathrm{bi}} = \tfrac{1}{2}\left[\mathcal{L}_{\mathrm{tri}}(D) + \mathcal{L}_{\mathrm{tri}}(D^{\top})\right] \ , \tag{7}$$

where $\mathcal{L}_{\mathrm{tri}}(D^{\top})$ mines the hardest positives and negatives from the transposed distance matrix. In isolation, without $\mathcal{L}_{\mathrm{dcc}}$, bidirectional mining does not consistently improve results (Table 4, Arms 0, 3, 4); combined with $\mathcal{L}_{\mathrm{dcc}}$, it yields the strongest performance in the auxiliary-loss sweep (Sec. 4.3, Table 4).

Total loss. Let $\mathcal{L}_{\mathrm{tri}}^{\mathrm{F}}$ denote the (optionally bidirectional) Finsler triplet on the chosen embedding slice, $\mathcal{L}_{\mathrm{align}}$ the identity-only alignment (5), $\mathcal{L}_{\mathrm{uniform}}$ the BAU uniformity term on $\mathbf{z}^{\mathrm{id}}$, $\mathcal{L}_{\mathrm{dom}}$ the memory-bank domain repulsion (11), $\overline{\mathcal{L}}_{\omega}$ the average barrier penalty (9) over weak/strong views. The composite loss is

$$\begin{aligned}\mathcal{L} = \mathcal{L}_{\mathrm{ce}} + \mathcal{L}_{\mathrm{tri}}^{\mathrm{F}} + \mathcal{L}_{\mathrm{align}} \\ + \mathcal{L}_{\mathrm{uniform}} + \mathcal{L}_{\mathrm{dom}} + \overline{\mathcal{L}}_{\omega} + \mathcal{L}_{\mathrm{dcc}} + \cdots \ ,\end{aligned} \tag{8}$$

where omitted terms collect optional auxiliaries used only in specific ablations (Sec. 3.5) or the auxiliary cross-entropy on domain tokens $\mathcal{L}_{\text{dom-tok}}$ in the domain-prototype drift setting (Sec. 3.3). The primary recipe reported in Sec. 4 uses bidirectional unified $\mathcal{L}_{\mathrm{tri}}^{\mathrm{bi,F}}$ (eq. 7), w_{dcc}=0.1, residual drift, and λ_{ω}=1.5.

3.5. Drift regularization

Barrier penalty. The positivity condition $\|\omega\| < c$ (Sec. 3.2) is enforced via a logarithmic barrier [3]:

$$\mathcal{L}_{\omega} = -\frac{1}{|\mathcal{B}|} \sum_{i \in \mathcal{B}} \log\!\big(c - \|\omega_i\|_2 + \epsilon\big) \ , \tag{9}$$

where $\epsilon > 0$ prevents numerical singularity. The gradient $\partial \mathcal{L}_{\omega} / \partial \|\omega\| = 1/(c - \|\omega\| + \epsilon)$ grows as the norm approaches the bound, providing an increasingly strong restorative signal—unlike hard clamping, which zeros the gradient for $\|\omega\| \geq c$.

Cross-camera drift coherence $\mathcal{L}_{\mathrm{dcc}}$ (primary auxiliary). We regularize the drift subspace by penalizing L2 dispersion across same-identity, different-camera pairs. Without this constraint, an unconstrained drift head tends to absorb camera-specific appearance variation: drift vectors for the same person seen from different cameras diverge, rendering the asymmetric term in d_F incoherent across matching directions. $\mathcal{L}_{\mathrm{dcc}}$ acts as a *drift variance regularizer*:

$$\mathcal{L}_{\mathrm{dcc}} = \frac{1}{|\mathcal{C}_{\mathrm{dcc}}|} \sum_{(i,j) \in \mathcal{C}_{\mathrm{dcc}}} \|\omega_i - \omega_j\|_2^2 \tag{10}$$

where $\mathcal{C}_{\mathrm{dcc}} = \{(i,j) : y_i = y_j,\ c_i \neq c_j\}$ and ω_i denotes the post-orthogonalization drift vector for sample i. This prevents drift from becoming a camera-noise sink and ensures ω provides a small, consistent directional correction: a prerequisite for the Randers positivity constraint and the low drift magnitudes observed empirically (Sec. 4.4). The effect is not that drift semantically encodes person identity; it is that drift variance is bounded so that the asymmetric scoring term is reliable. Two interpretations are consistent with this: (i) drift as an identity-conditioned directional bias that should be view-invariant for a given person, and (ii) a soft regularizer that reduces the effective drift dimensionality required for stable Randers scoring.

Same-camera drift attraction $\mathcal{L}_{\text{sca}}$ (ablation only). For ablation completeness we also test same-camera drift attraction, which encourages drift vectors within the same camera to align regardless of identity. Its equation and ablation results appear in Supp. 18. We do *not* require $\mathcal{L}_{\text{sca}}$ in the primary recipe.

3.6. Domain losses

Asymmetric domain repulsion. We substitute d_F for the Euclidean distance in the BAU domain repulsion term [4], making the penalty direction-aware: cost depends on drift-vector orientation, not only Euclidean separation. Let $\mathbf{m}_k$ denote the centroid of domain k in the memory bank:

$$\mathcal{L}_{\text{dom}} = \frac{1}{|\mathcal{B}|} \sum_{i \in \mathcal{B}} \phi\big(d_F^2(\mathbf{z}_i, \mathbf{m}_{c(i)})\big)\,, \tag{11}$$

where $\phi(\cdot)$ is the BAU repulsion kernel [4] and $c(i)$ is the domain label of sample i.

Asymmetric domain triplet (ablation; see §3.7). A camera-mined batch-hard triplet on d_F was evaluated as an explicit encoder of nuisance structure in the drift subspace:

$$\mathcal{L}_{\text{tri}}^{\text{dom}} = \frac{1}{|\mathcal{B}|} \sum_{i \in \mathcal{B}} \Big[\max_{p: c_p = c_i} d_F(\mathbf{z}_i, \mathbf{z}_p) - \min_{n: c_n \neq c_i} d_F(\mathbf{z}_i, \mathbf{z}_n) + m_{\text{dom}} \Big]_+ \,, \tag{12}$$

where positives share a camera c_i (rather than an identity y_i) and negatives are drawn from other cameras. This consistently produced large mAP regressions (§3.7, Table 4, Arm 5); failure-mode analysis is in Supp. 19.

3.7. Objective interference analysis

Under multi-source protocols [4, 23], jointly optimizing the camera-mined triplet $\mathcal{L}_{\text{tri}}^{\text{dom}}$ (eq. 12) with the identity-mined unified loss $\mathcal{L}_{\text{tri}}^{\text{bi}}$ (eq. 7) yields -7.5% mAP regressions (Table 4, Arm 5). We call this **objective interference**: identity batch-hard mining rewards cross-camera same-PID proximity, whereas camera batch-hard mining rewards same-camera proximity (typically different identities), so the two hinges disagree on the full embedding and the drift subspace absorbs most of the slack ($\max \|\hat{\omega}\|$ rises from $\approx$0.09 under the primary recipe to $\approx$0.11–0.12 in Arm 5). Memory-bank $\mathcal{L}_{\text{dom}}$ adds a weaker secondary effect (repulsion from domain centroids in d_F). Cross-camera drift coherence $\mathcal{L}_{\text{dcc}}$ (eq. 10) avoids camera-vs-identity hard-pair conflict by regularizing drift variance instead: the regime in which we prefer to operate when stability is paramount. Multi-term training precludes unique attribution; the empirical pattern is nonetheless consistent with this account.

Table 1. Dataset statistics for the four datasets used in Protocol 2/3. Train/test splits follow the new-protocol convention for CUHK03 [26].

Dataset	#IDs (train)	#Images (train)	#Cams
Market-1501 [24]	751	12,936	6
MSMT17 [20]	1,041	32,621	15
CUHK-SYSU [22]	5,532	18,184	var
CUHK03 [14]	767	7,368	6

4. Experimental Results

4.1. Datasets and protocols

We evaluate DG-ReID with multi-source training and held-out targets, following Protocol 2 and 3 from the standard DG-ReID benchmark suite and aligning with BAU [4]. We report three leave-one-out target settings: M+MS+CS→C3 (our primary split, chosen for exploratory scope and computational constraints), M+CS+C3→MS, and MS+CS+C3→M. Table 2 lists all six configurations for Finsler BAU (Arm 1b) and a configuration-matched Euclidean baseline. We measure CMC at Rank-k and mAP on the target domain.

4.2. Implementation details

Architecture. The identity encoder follows the BAU baseline [4]: ResNet-50 with stride-reduced Layer 4, GeM pooling, and a BN neck (d_{id}=2048). The residual and domain-prototype drift head designs are described in Sec. 3.3; both apply Gram-Schmidt orthogonalization and sigmoid-gated norm scaling as detailed there.

Training. The composite loss follows eq. (8): BAU cross-entropy $\mathcal{L}_{\text{ce}}$, bidirectional unified Finsler triplet $\mathcal{L}_{\text{tri}}^{\text{bi}}$ (eq. 7), identity-only alignment $\mathcal{L}_{\text{align}}$ (eq. 5) and uniformity $\mathcal{L}_{\text{uniform}}$ [4], Finsler-domain repulsion $\mathcal{L}_{\text{dom}}$ (eq. 11), barrier $\mathcal{L}_{\omega}$ (eq. 9) with λ_{ω}=1.5, and cross-camera drift coherence $\mathcal{L}_{\text{dcc}}$ (eq. 10) with w_{dcc}=0.1. The drift head uses a reduced learning rate ($\times$0.05 of backbone LR) and gradient clipping (max norm 1.0).

4.3. Quantitative analysis

Primary model. Our strongest configuration on M+MS+CS→C3 is **Arm 1b** (eq. 8; Table 4): bidirectional unified Finsler triplet $\mathcal{L}_{\text{tri}}^{\text{bi,F}}$ + $\mathcal{L}_{\text{dcc}}$ (weight 0.1), residual drift, no $\mathcal{L}_{\text{tri}}^{\text{dom}}$. Under the protocol-matched single-seed rerun it achieves 44.3% mAP and 44.8% Rank-1 (Table 2), an improvement of $+0.4\%$ mAP and -0.1% Rank-1 over the corresponding unidirectional configuration (Arm 1) in Table 4. Residual drift outperforms domain-prototype drift on this split: domain-prototype routing summarizes per-domain population statistics into a fixed prototype table, whereas when $\mathcal{L}_{\text{dcc}}$ already constrains drift variance across cameras for the same identity,

Table 2. Multi-target DG-ReID evaluation (mAP / Rank-1, %) across all three leave-one-out splits under Protocol 2 (standard sources) and Protocol 3 (source test splits added to training [4]). **Finsler BAU (ours)**: primary recipe of §3.4 (eq. 8, Arm 1b of Table 4). **Eucl. baseline**: configuration-matched BAU with ResNet-50 backbone (identical training splits, schedule, and loss stack; no drift branch). Best-mAP checkpoint selection throughout. Bold denotes the stronger result per cell.

		M+MS+CS→C3		M+CS+C3→MS		MS+CS+C3→M		3-split avg.	
Protocol	Method	mAP	R1	mAP	R1	mAP	R1	mAP	R1
P2	Eucl. baseline	42.4	41.8	**23.3**	**49.7**	**76.8**	**89.9**	47.5	60.5
	Finsler BAU (ours)	**44.9**	**45.8**	22.2	48.1	76.3	89.3	**47.8**	**61.2**
P3	Eucl. baseline	50.6	**51.2**	**26.4**	**52.9**	**78.7**	**90.8**	**51.9**	**65.0**
	Finsler BAU (ours)	**50.9**	50.9	26.0	52.3	78.1	90.7	51.7	64.6

Table 3. Multi-seed evaluation on M+MS+CS→C3 (Finsler BAU, Arm 1b, five independent runs). Mean and standard deviation are reported across seeds.

Seed	mAP	R1	R5	R10
1	43.8	44.2	62.9	74.9
2	43.4	43.1	64.1	73.6
3	44.0	43.7	64.6	74.1
4	43.8	43.4	64.3	74.2
5	44.1	43.8	63.6	73.6
Mean ± std	43.8 ± 0.3	43.6 ± 0.4	63.9 ± 0.7	74.1 ± 0.5

the per-sample flexibility of the residual MLP captures remaining heterogeneity more faithfully.

Multi-target evaluation (Table 2). Under Protocol 2, Finsler BAU outperforms the configuration-matched Euclidean baseline by $+1.9\%$ mAP on M+MS+CS→C3 (44.3 vs. 42.4%), but trails marginally on M+CS+C3→MS (22.2 vs. 23.3%) and MS+CS+C3→M (76.3 vs. 76.8%). The M+CS+C3→MS split exhibits a pronounced mAP-to-Rank-1 gap ($\approx$22–23% mAP vs. $\approx$48–50% Rank-1) for both methods, consistent with MSMT17's large gallery and high within-identity appearance variation, which penalise mean Average Precision more than single-rank retrieval. Under Protocol 3, on the **CUHK03** target both methods improve by 6–8% mAP relative to Protocol 2 (Finsler $+6.6\%$, Euclidean $+8.2\%$); on Market-1501 the Protocol 3 gain is smaller (Finsler $+1.8\%$, Euclidean $+1.9\%$). Finsler and Euclidean are within 0.6% mAP across all three P3 splits. The narrowing advantage under Protocol 3 reflects the expanded source identity and camera coverage from reusing source test splits; the stronger identity-discriminative signal reduces the marginal contribution of the asymmetric term in d_F (eq. 4), which primarily provides a directional correction on top of the identity chord distance.

Reproducibility (Table 3). Over five independent seeds on M+MS+CS→C3, Finsler BAU (Arm 1b) achieves mAP $= 43.8 \pm 0.3\%$ and Rank-1 $= 43.6 \pm 0.4\%$ (sample standard deviation). Variances on mAP and Rank-1 are both small, consistent with stable training across initialisations. The protocol-matched single-seed rerun (44.9% mAP, Table 2) lies $\approx 1.1\%$ above the multi-seed mean; code snapshots and hyperparameters are identical across all runs, and residual mismatch is attributable to hardware-dependent non-determinism (cuDNN algorithm benchmarking) and different iteration budgets vs. the multi-seed runs. The multi-seed mean (43.8%) is the more reproducible estimate.

Auxiliary-loss sweep (Table 4). Arm 5 (camera-mined asymmetric domain triplet $\mathcal{L}_{\text{tri}}^{\text{dom}}$, weight 1.0, with bidirectional mining) produces a -7.5% mAP regression relative to the unified baseline (see §3.7). Drift-only auxiliaries ($\mathcal{L}_{\text{dcc}}$, $\mathcal{L}_{\text{sca}}$, or both at weight 0.1) remain within $\pm 0.3\%$ mAP of each other without bidirectional mining (Arms 1–4). Adding bidirectional triplet on top of $\mathcal{L}_{\text{dcc}}$ (Arm 1b) yields the best sweep result aligned with the protocol-matched rerun (44.3% mAP, 44.8% Rank-1), confirming that the bidirectional gain requires the variance regularization provided by $\mathcal{L}_{\text{dcc}}$. Under Euclidean-domain $\mathcal{L}_{\text{dom}}$, the domain-triplet-only arm collapses by -6.1% mAP when Finsler ranking is activated at test (Supp. 6).

4.4. Controlled corruption analysis

To stress-test the drift branch in isolation from confounds present in natural multi-camera benchmarks, we apply a synthetic severity axis to held-out Market-1501 test identities: for each of $N{=}50$ subjects, five composite corruptions of increasing severity (Gaussian blur, bilinear resolution downscaling, gamma tone mapping, shot and Gaussian noise, JPEG recompression) are applied following ImageNet-C categories [9], with each severity assigned a distinct synthetic camera ID. The cross-camera information gap increases monotonically by construction, instantiating the directional probe-to-gallery setting of Sec. 1.

Drift and identity norms under corruption. On the primary residual drift checkpoint (Arm 1b), the drift magni-

Table 4. Auxiliary loss sweep on M+MS+CS→C3 (CUHK03 target), Finsler asymmetric ranking, 60 epochs, λ_ω=1.5. **DCC** = cross-camera drift coherence $\mathcal{L}_{\text{dcc}}$ (eq. 10); **SCA** = same-camera drift attraction (Supp. 18). **Arm 1b** (unified bidirectional triplet + DCC, residual drift) is the recommended primary row. Drift-head columns report *res.* (residual drift) / *dom-proto.* (domain-prototype drift); Arm 1b reports residual drift only. max $\|\hat{\omega}\|$ is the epoch-peak post-GS drift norm.

Arm	Base triplet	Drift auxiliaries	Drift head	mAP	R1	R5	R10	max $\|\hat{\omega}\|$
0	Unified	$\mathcal{L}_{\text{sca}}$ (w=0.1) + bidir	res. / dom-proto.	43.6 / 43.0	43.4 / 43.1	64.6 / 64.7	74.4 / 73.4	0.090 / 0.086
1	Unified	$\mathcal{L}_{\text{dcc}}$ (w=0.1)	res. / dom-proto.	43.9 / 42.8	44.9 / 42.1	64.9 / 64.3	74.1 / 72.9	0.086 / 0.081
1b	**Unified + bidir**	$\mathcal{L}_{\text{dcc}}$ (w=0.1)	**res.**	**44.9**	**45.8**	**64.9**	**74.3**	**0.090**
2	Unified	$\mathcal{L}_{\text{dcc}} + \mathcal{L}_{\text{sca}}$ (w=0.1)	res. / dom-proto.	43.9 / 43.6	44.5 / 44.0	63.8 / 63.6	74.1 / 74.3	0.082 / 0.084
3	Id.-slice + bidir	$\mathcal{L}_{\text{sca}}$ (w=0.1)	res. / dom-proto.	43.7 / 43.2	43.9 / 42.9	64.6 / 63.3	75.4 / 72.9	0.085 / 0.079
4	Unified	$\mathcal{L}_{\text{sca}}$ (w=0.3) + bidir	res. / dom-proto.	43.9 / 43.6	44.6 / 43.3	64.7 / 64.3	74.1 / 73.8	0.080 / 0.074
5	Unified + bidir	$\mathcal{L}_{\text{tri}}^{\text{dom}}$ (cam., w=1)	res. / dom-proto.	36.4 / 35.2	35.5 / 36.0	56.5 / 57.6	66.0 / 67.7	0.114 / 0.119

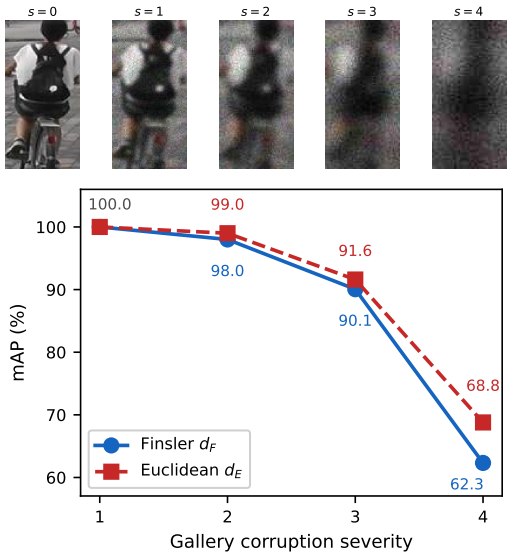

Figure 3. **Controlled corruption as a proxy for asymmetric probe-to-gallery matching.** *Top*: one identity at synthetic severity s=0 (clean; query) through s=4 (extreme degradation; gallery), produced by compositing Gaussian blur, bilinear resolution downscaling, gamma tone shift, sensor noise, and JPEG recompression following ImageNet-C categories [9]. *Bottom*: mAP for clean-query → corrupted-gallery retrieval comparing two *independently trained* models: a Euclidean BAU baseline (d_E, ResNet-50) and our Finsler BAU checkpoint (d_F on $[\mathbf{z}^{\text{id}}; \hat{\mathbf{z}}^{\omega}]$). Both degrade with severity; at extreme corruption (s=4) the gap (≈7% mAP) reflects differences in both representation and scoring across independent runs. See Sec. 4.4 for analysis.

tude $\|\hat{\mathbf{z}}^{\omega}\|_2$ shows a statistically significant monotone trend with severity (Spearman ρ=0.67, $p<10^{-30}$), but the effect size is small: observed values span $[0.054, 0.067]$, only 1.4% of the barrier bound $c_{\max}$=0.95. The normalized identity distance $\|\mathbf{z}_k^{\text{id}} - \mathbf{z}_0^{\text{id}}\|_2$ from the clean reference grows monotonically with severity as well, with $k \in \{1, 2, 3, 4\}$. Corruption-induced variation propagates into the identity slice: orthogonalization of $\hat{\mathbf{z}}^{\omega}$ provides an inductive bias rather than a statistical independence guarantee (Sec. 3.1), and augmentation-only identity alignment does not prevent identity drift under the large domain shifts induced by high-severity corruption. See Fig. 1 for the full series. $\mathcal{L}_\omega$ and $\mathcal{L}_{\text{dcc}}$ keep post-GS drift norms well below $c_{\max}$ (Table 4).

Asymmetric retrieval (Fig. 3). We compare two independently trained checkpoints, Euclidean BAU (ResNet-50, d_E) and our Finsler BAU (d_F on $[\mathbf{z}^{\text{id}}; \hat{\mathbf{z}}^{\omega}]$), on clean-query → corrupted-gallery retrieval. Both models degrade with severity; at s=4, Euclidean achieves 69.7% mAP vs. 62.3% for Finsler (≈7% gap). This is not a controlled test of Finsler vs. Euclidean scoring: the checkpoints differ in representation, drift-branch gradient flow, and $\mathcal{L}_{\text{dcc}}$ (eq. 10). The observation is that the Finsler recipe degrades faster under extreme test shift, so the drift factor does not rescue retrieval when the identity signal is severely corrupted.

Interpretation. The controlled protocol separates representation mismatch (captured by growing $\|\mathbf{z}_k^{\text{id}} - \mathbf{z}_0^{\text{id}}\|_2$) from asymmetric scoring behavior. Drift tracks severity weakly (ρ=0.67), but absolute drift magnitudes remain small relative to identity displacements. This informs Sec. 4.3: drift-subspace variance control is necessary for training stability and enables a weak monotonic drift signal, but large retrieval gains from asymmetric scoring over Euclidean ranking on the same checkpoint remain unconfirmed.

5. Discussion

The original premise of this work is that probe-to-gallery retrieval in heterogeneous camera networks is direction-dependent: a clean query retrieved against a degraded gallery is not the same problem as the reverse. The Randers drift factor $\hat{\mathbf{z}}^{\omega}$ was intended to encode this per-camera directional shift: larger domain shifts should correspond to larger drift magnitudes, enabling the asymmetric scoring term eq. (4) to compensate for camera-specific degradation.

The best-performing recipe contradicts this premise directly. Cross-camera drift coherence regularization ($\mathcal{L}_{\mathrm{dcc}}$) penalizes *dispersion* of drift vectors across cameras for the same identity: it forces drift to be *camera-invariant* for a given person. This is the opposite of what the motivating intuition would prescribe. Two complementary interpretations are consistent with the empirical data:

(i) Drift as an identity-conditioned directional bias. $\mathcal{L}_{\mathrm{dcc}}$ does not suppress drift magnitude; post-GS norms range 0.054–0.067 across corruption severities and are monotonically increasing with severity (ρ=0.67, Sec. 4.4). What $\mathcal{L}_{\mathrm{dcc}}$ suppresses is *cross-camera variance*: drift for a given identity converges to a stable direction regardless of camera. Under this interpretation, $\hat{\mathbf{z}}^{\omega}$ encodes a per-person directional preference in feature space, indicating a stable asymmetric bias, not a camera noise sink. The empirical observation that identity distance grows monotonically with severity ($0 \rightarrow 1.27$) while drift grows only weakly ($0.054 \rightarrow 0.067$) is consistent: corruption bleeds into the identity slice, while drift remains bounded and coherent.

(ii) Drift coherence as training-geometry regularization. Bidirectional Finsler triplet mining requires that both $d_F(i,j)$ and $d_F(j,i)$ provide a reliable margin signal. When drift vectors are incoherent across cameras, the asymmetric term introduces high-variance distance estimates that destabilize hard-pair mining. $\mathcal{L}_{\mathrm{dcc}}$ functions as a variance regularizer that makes bidirectional mining numerically stable, explaining why the bidirectional gain ($+1.0\,\mathrm{pp}$ mAP) materializes only when $\mathcal{L}_{\mathrm{dcc}}$ is active (Arm 1b vs. Arms 0, 3, 4 in Table 4).

Both interpretations are consistent with $\Delta\mathrm{mAP} \approx 0$ when switching from Euclidean to Finsler ranking on the same checkpoint (Supp. 15): the gain from the primary recipe comes through *training geometry*, not a fundamentally different test-time scoring function.

6. Conclusion

We investigated whether Randers/Finsler-style asymmetric retrieval scores improve domain-generalizable person ReID on top of BAU-style alignment-uniformity training. Our primary finding is that the **Arm 1b** recipe (eq. 8; Table 4), with drift-subspace variance regularization rather than camera-mined domain triplets or domain-prototype routing, yields stable asymmetric retrieval on M+MS+CS→CUHK03. The domain-prototype head, while principled, does not improve over the per-sample residual MLP when $\mathcal{L}_{\mathrm{dcc}}$ already bounds cross-camera drift dispersion.

Scope and limitations. Multi-target evaluation across all three Protocol 2 and 3 splits is reported in Table 2; multi-seed analysis (Table 3, five seeds) yields mAP $= 43.8 \pm 0.3\,\mathrm{pp}$ on M+MS+CS→C3, confirming stable training. Finsler BAU outperforms the matched Euclidean baseline by $+1.9\,\mathrm{pp}$ mAP on M+MS+CS→C3 (Protocol 2) but is within $0.3\,\mathrm{pp}$ on all other splits and under Protocol 3, indicating that the benefit of asymmetric geometry is split- and augmentation-dependent. The controlled corruption analysis (Sec. 4.4) confirms that the drift branch tracks severity monotonically but at magnitudes that yield near-zero test-time gains from Finsler ranking over Euclidean ranking on the same checkpoint: meaning the bidirectional triplet gain ($+1.0\,\mathrm{pp}$ mAP) comes through improved training geometry, not through a fundamentally different test-time distance function.

Future work. Several directions remain open. **Cross-modal retrieval** (RGB-IR, RGB-depth) is the most natural next application: sensor-induced asymmetry is large, fixed in direction, and the domain prior is exactly known: conditions where the domain-prototype head and a larger drift coherence weight may be appropriate. **ViT/Swin backbones** may expose qualitatively different drift behavior: patch-level representations do not pool global statistics the same way as GeM-pooled ResNet50 features, and the backbone coupling identified in Sec. 3.1 will take a different form in the attention regime. **Drift-only triplet mining** is unexplored: the drift subspace currently receives no direct identity-discriminative or domain-discriminative triplet signal of its own, relying entirely on the bidirectional unified triplet and $\mathcal{L}_{\mathrm{dcc}}$. Mining within the drift subspace alone may expose whether drift carries retrievable structure beyond variance regularization. **Capacity attribution** is unresolved: Finsler BAU uses a 4096-d embedding vs. the 2048-d Euclidean baseline; whether the mAP gain is attributable to asymmetric geometry or to additional model capacity remains to be tested with a matched 4096-d Euclidean baseline. **Statistical disentanglement** requires breaking the shared-backbone constraint: a dedicated identity encoder and a separate drift encoder (e.g., DSN-style [2]) would sever the Jacobian coupling identified in Sec. 3.1. We also flag using the Randers distance itself as a direct supervision signal for drift scaling (rather than via Gram-Schmidt plus barrier), citing [1, 17], as a direction not pursued here.

References

[1] David Bao, Shiing-Shen Chern, and Zhongmin Shen. *An Introduction to Riemann-Finsler Geometry*. Springer, 2000. 2, 3, 4, 9

[2] Konstantinos Bousmalis, George Trigeorgis, Nathan Silberman, Dilip Krishnan, and Dumitru Erhan. Domain separation networks. In *Advances in Neural Information Processing Systems (NeurIPS)*, 2016. 3, 9, 2

[3] Stephen Boyd and Lieven Vandenberghe. *Convex Optimization*. Cambridge University Press, 2004. 5

[4] Yoonki Cho, Jaeyoon Kim, Woo Jae Kim, Junsik Jung, and

Sung-eui Yoon. Generalizable person re-identification via balancing alignment and uniformity. In *Advances in Neural Information Processing Systems (NeurIPS)*, 2024. 1, 2, 3, 4, 6, 7

[5] Seokeon Choi, Taekyung Kim, Minki Jeong, Hyoungseob Park, and Changick Kim. Meta batch-instance normalization for generalizable person re-identification. In *Proceedings of the IEEE/CVF Conference on Computer Vision and Pattern Recognition (CVPR)*, pages 3425–3435, 2021. 1, 2

[6] Thomas M. Cover and Joy A. Thomas. *Elements of Information Theory*. Wiley-Interscience, 2nd edition, 2006. 3

[7] Thomas Dagès, Simon Weber, Ya-Wei Eileen Lin, Ronen Talmon, Daniel Cremers, Michael Lindenbaum, Alfred M. Bruckstein, and Ron Kimmel. Finsler multi-dimensional scaling: Manifold learning for asymmetric dimensionality reduction and embedding. In *Proceedings of the IEEE/CVF Conference on Computer Vision and Pattern Recognition (CVPR)*, 2025. 2, 3

[8] Xing Fan, Wei Jiang, Hao Luo, and Mengjuan Fei. SphereReID: Deep hypersphere manifold embedding for person re-identification. *Journal of Visual Communication and Image Representation*, 60:51–58, 2019. 2

[9] Dan Hendrycks and Thomas Dietterich. Benchmarking neural network robustness to common corruptions and perturbations. *International Conference on Learning Representations (ICLR)*, 2019. 7, 8

[10] Alexander Hermans, Lucas Beyer, and Bastian Leibe. In defense of the triplet loss for person re-identification, 2017. 2, 4

[11] Xun Huang, Ming-Yu Liu, Serge Belongie, and Jan Kautz. Multimodal unsupervised image-to-image translation. In *Proceedings of the European Conference on Computer Vision (ECCV)*, pages 172–189, 2018. 2

[12] Xin Jin, Cuiling Lan, Wenjun Zeng, Zhibo Chen, and Li Zhang. Style normalization and restitution for generalizable person re-identification. In *Proceedings of the IEEE/CVF Conference on Computer Vision and Pattern Recognition (CVPR)*, pages 3143–3152, 2020. 1, 2

[13] Valentin Khrulkov, Leyla Mirvakhabova, Evgeniya Ustinova, Ivan Oseledets, and Victor Lempitsky. Hyperbolic image embeddings. In *Proceedings of the IEEE/CVF Conference on Computer Vision and Pattern Recognition (CVPR)*, pages 6428–6437, 2020. 2

[14] Wei Li, Rui Zhao, Tong Xiao, and Xiaogang Wang. DeepReID: Deep filter pairing neural network for person re-identification. In *Proceedings of the IEEE Conference on Computer Vision and Pattern Recognition (CVPR)*, pages 152–159, 2014. 6

[15] Huy Nguyen, Kien Thanh Nguyen, Sridha Sridharan, and Clinton Fookes. AG-ReID.v2: Bridging aerial and ground views for person re-identification. *IEEE Trans. Inf. Forensics Secur.*, 19:2896–2908, 2024. 3

[16] Xingang Pan, Ping Luo, Jianping Shi, and Xiaoou Tang. Two at once: Enhancing learning and generalization capacities via ibn-net. In *Proceedings of the European Conference on Computer Vision (ECCV)*, pages 464–479, 2018. 1, 2

[17] G. Randers. On an asymmetrical geometry in which the length of tangent vectors depends on direction. *Physical Review*, 59(2):195–199, 1941. 2, 9

[18] Jifei Song, Yongxin Yang, Yi-Zhe Song, Tao Xiang, and Timothy M. Hospedales. Generalizable person re-identification by domain-invariant mapping network. In *Proceedings of the IEEE/CVF Conference on Computer Vision and Pattern Recognition (CVPR)*, pages 719–728, 2019. 1, 2

[19] Tongzhou Wang and Phillip Isola. Understanding contrastive representation learning through alignment and uniformity on the hypersphere. In *Proceedings of the 37th International Conference on Machine Learning*, pages 9929–9939. PMLR, 2020. 2

[20] Longhui Wei, Shiliang Zhang, Wen Gao, and Qi Tian. Person transfer gan to bridge domain gap for person re-identification. In *Proceedings of the IEEE/CVF Conference on Computer Vision and Pattern Recognition (CVPR)*, pages 79–88, 2018. 6

[21] Ancong Wu, Wei-Shi Zheng, Hong-Xing Yu, Shaogang Gong, and Jianhuang Lai. Rgb-infrared cross-modality person re-identification. In *Proceedings of the IEEE International Conference on Computer Vision (ICCV)*, 2017. 2, 3

[22] Tong Xiao, Shuang Li, Bochao Wang, Liang Lin, and Xiaogang Wang. End-to-end deep learning for person search. In *Proceedings of the IEEE/CVF Conference on Computer Vision and Pattern Recognition (CVPR)*, 2017. 6

[23] Yuyang Zhao, Zhun Zhong, Fengxiang Yang, Zhiming Luo, Yaojin Lin, Shaozi Li, and Nicu Sebe. Learning to generalize unseen domains via memory-based multi-source meta-learning for person re-identification. In *Proceedings of the IEEE/CVF Conference on Computer Vision and Pattern Recognition (CVPR)*, pages 6277–6286, 2021. 6

[24] Liang Zheng, Liyue Shen, Lu Tian, Shengjin Wang, Jingdong Wang, and Qi Tian. Scalable person re-identification: A benchmark. In *Proceedings of the IEEE International Conference on Computer Vision (ICCV)*, pages 1116–1124, 2015. 6

[25] Zhedong Zheng, Xiaodong Yang, Zhiding Yu, Liang Zheng, Yi Yang, and Jan Kautz. Joint discriminative and generative learning for person re-identification. In *Proceedings of the IEEE/CVF Conference on Computer Vision and Pattern Recognition (CVPR)*, pages 2138–2147, 2019. 1, 2

[26] Zhun Zhong, Liang Zheng, Donglin Cao, and Shaozi Li. Re-ranking person re-identification with k-reciprocal encoding. In *Proceedings of the IEEE/CVF Conference on Computer Vision and Pattern Recognition (CVPR)*, pages 1318–1327, 2017. 4, 6

Rethinking Metric Symmetry in Person Re-Identification via Unified Finsler Geometry

Supplementary Material

7. Learnable Alpha Interpolation Path

This section documents the scalar-gate parameterization of the Randers asymmetric term—an intermediate design step that preceded and was subsequently superseded by the full split-embedding omega architecture described in Sec. 3.2.

7.1. Formulation

Let $\mathbf{z} = [\mathbf{z}^{\mathrm{id}}; \mathbf{z}^{\omega}]$ be the split embedding from Sec. 3.2. The triplet distance under the canonical flat Randers template (cf. eq. 1) decomposes as:

$$d_F^{\alpha}(\mathbf{x}, \mathbf{y}) = \|\mathbf{x}^{\mathrm{id}} - \mathbf{y}^{\mathrm{id}}\|_2 + \alpha \cdot \left\langle \tfrac{1}{2}(\mathbf{x}^{\omega} + \mathbf{y}^{\omega}),\, \mathbf{y}^{\mathrm{id}} - \mathbf{x}^{\mathrm{id}} \right\rangle, \tag{13}$$

where $\alpha \in [0, \alpha_{\max}]$ is a bounded learnable scalar that gates the asymmetric contribution. This is an instance of the canonical Randers form with a learned, globally uniform drift magnitude.

The scalar α is parameterized via a temperature-scaled sigmoid to enforce the bound:

$$\alpha = 2\alpha_{\max} \left| \sigma\left(\tfrac{r}{T}\right) - 0.5 \right|, \tag{14}$$

with raw parameter r, temperature T, and maximum $\alpha_{\max}$. Setting $r{=}0$ initializes $\alpha{=}0$, recovering Euclidean batch-hard mining on the identity slice.

7.2. Relationship to the full omega architecture

The scalar-gate parameterization is an early-stage instantiation in which the full drift vector $\mathbf{z}^{\omega}$ contributes asymmetry modulated by a single global gate α. This design was superseded by the split-embedding architecture introduced in Sec. 3.2, which treats $\mathbf{z}^{\omega}$ as a learned d_{ω}-dimensional drift factor orthogonalized to the identity direction. In the current implementation, $\mathbf{z}^{\omega}$ alone defines the asymmetric cost in d_F; the scalar α gate is a legacy component no longer active in the training recipe.

The design rationale for the transition: a scalar gate imposes a single global magnitude on asymmetry, preventing the network from learning heterogeneous, direction-specific drift contributions. The full omega subspace removes this bottleneck while retaining the $\mathbf{z}^{\omega} \to \mathbf{0}$ Euclidean limit via omega regularization.

7.3. Empirical behavior

Under the multi-source DG-ReID protocols used in this paper, α consistently pegged to $\alpha_{\max}$ across all runs. This behavior is consistent with the model exploiting the asymmetric term as a shortcut—assigning maximum directional cost from early epochs rather than learning calibrated directional costs data-adaptively. This instability motivated the transition to the full omega drift-vector architecture, in which omega regularization provides a principled constraint on drift magnitude.

7.4. Scope

The scalar-gate mechanism is a research stepping stone that clarified the design space and directly motivated the full omega architecture. It is documented here for reproducibility and to provide a complete account of the development trajectory. The main text focuses on the split-embedding architecture and the Randers-type distance d_F (eq. 4); the α gate is a superseded design variant disclosed here.

8. Alternative Drift Integration Methods

The symmetric trapezoidal approximation (eq. 4) is the simplest closed-form integration of the drift field along the identity chord. We implemented and evaluated three alternatives that account for the curvature of the path on the unit sphere.

Spherical trapezoidal. When identity features are ℓ_2-normalized, the straight-line chord in eq. (4) does not lie on the unit sphere. The spherical trapezoidal variant replaces the Euclidean midpoint with the geodesic midpoint on $\mathbb{S}^{d-1}$. However, as the cosine similarity $C = \langle \hat{\mathbf{x}}^{\mathrm{id}}, \hat{\mathbf{y}}^{\mathrm{id}} \rangle \to 1$ (near-duplicate pairs), the geodesic arc length vanishes and the asymmetry term collapses regardless of drift magnitude, producing zero gradient for the drift branch on the most informative (hard positive) pairs.

SLERP with midpoint Riemann sum. Spherical linear interpolation (SLERP) traces the great-circle arc between $\hat{\mathbf{x}}^{\mathrm{id}}$ and $\hat{\mathbf{y}}^{\mathrm{id}}$. We discretize the path into $K{=}10$ steps and compute a midpoint Riemann sum of the drift–velocity inner product along the arc. The velocity at parameter t involves coefficients $A_t = -\frac{\theta}{\sin\theta}\cos\big((1{-}t)\theta\big)$ and $B_t = \frac{\theta}{\sin\theta}\cos(t\theta)$, where $\theta = \arccos\langle \hat{\mathbf{x}}^{\mathrm{id}}, \hat{\mathbf{y}}^{\mathrm{id}} \rangle$.

Analytical integration with parallel transport. Under Levi-Civita parallel transport on $\mathbb{S}^{d-1}$, the drift field is transported along the geodesic and integrated analytically:

$$\text{asymmetry}_{\text{analytical}} = \tfrac{1}{2}\,\frac{\theta}{\sin\theta}\big(\langle \omega_x, \hat{\mathbf{y}}^{\mathrm{id}} \rangle - \langle \omega_y, \hat{\mathbf{x}}^{\mathrm{id}} \rangle\big)\,. \tag{15}$$

Numerical stability. Both SLERP and analytical methods require $\arccos$ and $\theta/\sin\theta$, which are numerically unstable near $\theta{=}0$ and $\theta{=}\pi$. We apply three stabilization techniques: (i) dynamic epsilon clamping based on datatype (10^{-4} for `float16`, 10^{-6} for `float32`); (ii) bounded linear extrapolation for $\arccos$ near the boundary (following PyTorch3D); (iii) a fourth-order Taylor expansion $\theta/\sin\theta \approx 1 + \theta^2/6 + 7\theta^4/360$ for $|\theta| < 0.01$. All angular computations are locally promoted to `float32` to avoid mixed-precision underflow.

Empirical outcome. Despite these stabilizations, SLERP and analytical methods did not improve over the symmetric trapezoidal baseline on our evaluation protocol. The trapezoidal form was retained as the default for its simplicity and numerical robustness.

9. Drift Norm Constraint Alternatives

We evaluated four strategies for enforcing $\|\omega\| < c$:

1. **Hard clamping**: $\omega \leftarrow \omega \cdot \min(1, c/\|\omega\|)$. Discontinuous gradients at the boundary; the optimizer receives zero gradient when $\|\omega\| \leq c$, preventing fine-grained norm control.
2. **Soft tanh scaling**: $\omega \leftarrow \hat{\omega} \cdot c \cdot \tanh(\|\omega\|/c)$. Smooth but compresses the gradient for large norms, slowing convergence.
3. **Sigmoid gating** (adopted): $\omega \leftarrow \hat{\omega} \cdot c \cdot \sigma(\|\omega\|)$. Monotonic, smooth, and bounded by c. The sigmoid provides a natural soft saturation without gradient compression at small norms.
4. **LogSumExp**: $\omega \leftarrow \hat{\omega} \cdot (-\frac{1}{\beta}) \log\big(e^{-\beta\|\omega\|} + e^{-\beta c}\big)$. Smooth approximation to $\min(\|\omega\|, c)$ controlled by sharpness β. More complex with no empirical advantage over sigmoid gating.

Sigmoid gating was selected for its simplicity and stable training dynamics. The logarithmic barrier penalty (Sec. 3.5) provides an additional soft constraint during optimization.

10. k-NN Weight Contamination and Uniform Loss Corrections

k-NN Jaccard weights. The BAU alignment loss [4] weights each pair by reciprocal k-NN Jaccard similarity. When computed on the full $[\mathbf{z}^{\mathrm{id}} \mid \mathbf{z}^{\omega}]$ embedding, drift magnitude biases the cosine similarity used for neighbor retrieval: samples with large $\|\omega\|$ appear closer to each other regardless of identity, contaminating the Jaccard graph with drift-correlated edges. Restricting the k-NN computation to the identity slice $\mathbf{z}^{\mathrm{id}}$ eliminates this artifact.

Uniform loss. The BAU uniform loss penalizes $\log \mathbb{E}[\exp(-2\|f_i - f_j\|^2)]$ over all pairs. On the full embedding, drift magnitude inflates pairwise distances, artificially satisfying the uniformity objective without improving identity-space coverage. Restricting the uniform loss to $\mathbf{z}^{\mathrm{id}}$ and using symmetric Euclidean distance ensures that the repulsion kernel acts on identity discrimination, not drift magnitude.

11. InstanceNorm Ablation Design

Instance Normalization (IN) in early ResNet stages is a standard DG-ReID technique for suppressing domain-specific style statistics [16]. Our hypothesis is that the learned drift vector can subsume the role of IN by explicitly modeling domain shift in the embedding space. We implement configurable IN insertion at ResNet stages 1–4, enabling systematic ablation: removing IN while retaining the drift head tests whether the Finsler asymmetry captures the same domain-invariance signal that IN provides through feature normalization.

12. Orthogonal Decomposition Rationale

Without an explicit orthogonality constraint, the drift branch can learn to replicate the identity signal. If $\mathbf{z}^{\omega} \approx \beta\,\hat{\mathbf{z}}^{\mathrm{id}}$ for some scalar β, the asymmetry term in eq. (4) reduces to $\beta\,\|\mathbf{x}^{\mathrm{id}} - \mathbf{y}^{\mathrm{id}}\|_2 \cos\theta$ (where θ is the angle between the identity displacement and the identity direction), i.e. a scaled copy of the Euclidean distance—the model gains no directional expressiveness. The Gram–Schmidt projection $\hat{\mathbf{z}}^{\omega} = \mathbf{z}^{\omega} - (\mathbf{z}^{\omega} \cdot \hat{\mathbf{z}}^{\mathrm{id}})\hat{\mathbf{z}}^{\mathrm{id}}$ removes the identity-parallel component, forcing drift to encode information orthogonal to identity discrimination. This is an inductive bias analogous to the shared-private decomposition in domain separation networks [2]: the identity branch captures domain-invariant structure, while the drift branch is structurally confined to the complementary subspace. The projection does not guarantee statistical independence at finite model capacity.

13. Drift Dimension Scaling Derivation

When $d_{\omega} < d_{\mathrm{id}}$, the inner product in eq. (4) operates on the first d_{ω} coordinates of the identity displacement. By the Cauchy–Schwarz inequality,

$$\big|\langle \omega,\, \Delta\mathbf{x}^{\mathrm{id}}_{[1:d_{\omega}]} \rangle\big| \leq \|\omega\|_2 \cdot \|\Delta\mathbf{x}^{\mathrm{id}}_{[1:d_{\omega}]}\|_2\,. \tag{16}$$

For isotropic identity features, $\|\Delta\mathbf{x}^{\mathrm{id}}_{[1:d_{\omega}]}\|_2 \approx \sqrt{d_{\omega}/d_{\mathrm{id}}}\;\|\Delta\mathbf{x}^{\mathrm{id}}\|_2$, so the asymmetry term is suppressed by $\sqrt{d_{\omega}/d_{\mathrm{id}}}$ relative to the Euclidean base. A dimensionality correction $\gamma = d_{\mathrm{id}}/d_{\omega}$ restores approximate magnitude parity between the symmetric and asymmetric components under the isotropic assumption, mitigating the risk that drift contribution vanishes as a dimensional artifact when $d_{\omega} \ll d_{\mathrm{id}}$.

14. Cross-Framework Validation (ReNorm2 Port)

To test whether the Finsler distance generalizes beyond the BAU training recipe, we ported the asymmetric scoring layer to the ReNorm2 framework with minimal modifications: the structured $[\mathbf{z}^{\mathrm{id}} \mid \mathbf{z}^{\omega}]$ embedding and d_F were inserted as drop-in replacements for the Euclidean distance in the ReNorm2 retrieval path. This port yielded negative results—the asymmetric distance did not improve over the ReNorm2 Euclidean baseline—suggesting that the benefit of directional scoring may depend on the specific alignment–uniformity training dynamics of BAU rather than being a universal improvement.

15. Finsler ranking at test (eval-drift diagnostics)

Table **??** in the main text reports metrics under identity-slice Euclidean evaluation for historical loss-structure arms. The following tables re-evaluate the same checkpoints with Finsler ranking at test (d_F on $[\mathbf{z}^{\mathrm{id}}; \mathbf{z}^{\omega}]$) versus Euclidean ranking on the identity slice, holding all representation weights fixed; Δ is the per-metric difference (Finsler minus Euclidean). Table 5 uses Finsler-domain $\mathcal{L}_{\mathrm{dom}}$ training; Table 6 is the Euclidean-domain $\mathcal{L}_{\mathrm{dom}}$ diagnostic (drift suppression).

16. Domain-prototype drift head: full architecture

The domain-prototype drift head (ω_{dom} in eq. 6) routes drift through a learnable prototype table as follows. Let $\mathbf{e}_s \in \mathbb{R}^{d_e}$ (d_e=64) be learnable embeddings for each of S source domains, W_c the weight matrix of the domain classifier, and $P \in \mathbb{R}^{d_e \times d_\omega}$ a linear projection. The domain prior is:

$$\omega_{\mathrm{dom}}(\mathbf{x}) = g\big(\mathbf{z}^{\mathrm{BN}}(\mathbf{x})\big) \odot P\left(\sum_{s=1}^{S} p_s(\mathbf{x})\, \mathbf{e}_s\right), \qquad (17)$$

where $p_s = \mathrm{softmax}(W_c\, \mathrm{sg}[\mathbf{z}^{\mathrm{BN}}])_s$ are soft domain probabilities from a classifier on the stop-gradient post-BN identity feature $\mathbf{z}^{\mathrm{BN}}$ (not the ℓ_2-normalized $\hat{\mathbf{z}}^{\mathrm{id}}$), and $g(\cdot) = \sigma(\cdot) \in \mathbb{R}^{d_\omega}$ is a sigmoid gate applied to $\mathbf{z}^{\mathrm{BN}}$ via a linear layer. At *training* time, p_s is replaced by the one-hot encoding of the known source-domain label d_i; the soft-probability path activates at inference when no domain label is supplied.

The gate g multiplies $P\big(\sum_s p_s\, \mathbf{e}_s\big)$ elementwise, modulating how much of the domain prototype is expressed for the current sample. The auxiliary loss $\mathcal{L}_{\text{dom-tok}} = \mathrm{CrossEntropy}\big(W_c\, \mathrm{sg}[\mathbf{z}^{\mathrm{BN}}],\, d_i\big)$ trains the classifier without gradients flowing into the identity backbone through this path.

17. Bidirectional Finsler triplet

The formulation and primary-recipe role of $\mathcal{L}_{\mathrm{tri}}^{\mathrm{bi}}$ are presented in Sec. 3.4 (eq. 7). In earlier ablation arms without $\mathcal{L}_{\mathrm{dcc}}$, bidirectional mining did not produce consistent gains (Table 4, Arms 0, 3, 4). The benefit emerges when combined with cross-camera drift coherence regularization: Arm 1b (unified + bidir + $\mathcal{L}_{\mathrm{dcc}}$) aligns with the best sweep row and the protocol-matched rerun in Table 2.

18. Same-camera drift attraction

The same-camera drift attraction loss encourages drift vectors within the same camera to align, encoding the hypothesis that camera-specific domain artifacts should produce similar drift:

$$\mathcal{L}_{\mathrm{sca}} = \frac{1}{|\mathcal{C}_{\mathrm{sca}}|} \sum_{(i,j)\in\mathcal{C}_{\mathrm{sca}}} \|\omega_i - \omega_j\|_2^2\,, \qquad (18)$$

where $\mathcal{C}_{\mathrm{sca}} = \{(i,j) : c_i = c_j,\, i \neq j\}$. This is a complementary inductive bias to $\mathcal{L}_{\mathrm{dcc}}$ (eq. 10): where $\mathcal{L}_{\mathrm{dcc}}$ reduces cross-camera drift variance for the same identity, $\mathcal{L}_{\mathrm{sca}}$ promotes same-camera drift clustering. The auxiliary-loss sweep (Table 4) shows neither ordering nor combination of $\mathcal{L}_{\mathrm{dcc}}$ and $\mathcal{L}_{\mathrm{sca}}$ consistently outperforms $\mathcal{L}_{\mathrm{dcc}}$ alone; $\mathcal{L}_{\mathrm{sca}}$ is not included in the primary recipe.

19. Asymmetric domain triplet: formulation and failure analysis

The camera-mined domain triplet $\mathcal{L}_{\mathrm{tri}}^{\mathrm{dom}}$ is defined in the main text (eq. 12). It was tested in three configurations (domain triplet only, identity-sliced + domain triplet, and unified + bidirectional + domain triplet at weight 1.0). In all cases it produced mAP regressions of -7.5% to -9.5% relative to the respective baseline (Table 4, Arm 5 and rows H1–H5). The regression is consistent with the objective interference mechanism described in Sec. 3.7. Under Euclidean-domain training (Supp. Table B), the domain-triplet-only arm also collapses under Finsler evaluation (ΔmAP$=-6.1$), confirming that the Euclidean domain loss suppresses the drift vector when combined with camera-mined asymmetric triplets. $\mathcal{L}_{\mathrm{tri}}^{\mathrm{dom}}$ is not used in the primary recipe.

Table 5. Effect of Finsler ranking at test (M+MS+CS→C3, Finsler-domain $\mathcal{L}_{\mathrm{dom}}$, best drift-head variant per arm): $\Delta \approx 0$ across all arms indicates that switching from Euclidean to Finsler ranking on the same checkpoint does not measurably change mAP or Rank-1; the sole exception—*domain triplet only* under Euclidean-domain training ($\Delta\mathrm{mAP} = -6.1$, Table B)—reveals that $\mathcal{L}_{\mathrm{dom}}^{\mathrm{Eucl}}$ suppresses the drift vector, breaking Finsler ranking at test.

Arm	Best variant	mAP (%)			Rank-1 (%)		
		Eucl. eval	Finsler eval	ΔmAP	Eucl. eval	Finsler eval	ΔR1
Identity-sliced triplet	res.	44.1	44.1	+0.0	43.6	43.6	+0.0
Domain triplet only	res.	35.1	35.1	+0.0	33.9	33.9	+0.0
Id.-slice + domain triplet	res.	36.4	36.5	+0.1	36.2	36.3	+0.1
Id.-slice + dom. triplet (no $\mathcal{L}_{\mathrm{dom}}$)	res.	34.6	34.6	+0.0	36.4	36.6	+0.2
Id.-slice + cam. xDom contrast.	res.	43.1	43.2	+0.1	43.7	43.6	−0.1
Id.-slice + $\mathcal{L}_{\mathrm{dcc}}$	dom-proto.	**43.8**	**43.8**	**+0.0**	**44.9**	**45.0**	**+0.1**
Unified Finsler	res.	**44.1**	**44.1**	**+0.0**	**44.0**	**44.1**	**+0.1**

Table 6. Diagnostic: same eval-drift comparison as Table A but with Euclidean-domain $\mathcal{L}_{\mathrm{dom}}$ (`--use-euclidean-domain-loss`, M+MS+CS→C3): *domain triplet only* collapses from 30.6% to 24.5% mAP when Finsler ranking is activated ($\Delta\mathrm{mAP} = -6.1$), confirming that Euclidean domain training suppresses the drift vector and is incompatible with Finsler-distance evaluation.

Arm	Best variant	mAP (%)			Rank-1 (%)		
		Eucl. eval	Finsler eval	ΔmAP	Eucl. eval	Finsler eval	ΔR1
Identity-sliced triplet	res.	43.9	43.9	+0.0	43.9	43.9	+0.0
Domain triplet only	res.	**30.6**	**24.5**	**−6.1**	**30.6**	**27.7**	**−2.9**
Id.-slice + domain triplet	dom-proto.	37.8	37.8	+0.0	38.9	39.1	+0.2
Id.-slice + dom. triplet (no $\mathcal{L}_{\mathrm{dom}}$)	res.	33.6	33.6	+0.0	35.0	34.7	−0.3
Id.-slice + cam. xDom contrast.	res.	42.8	42.8	+0.0	43.4	43.4	+0.0
Id.-slice + $\mathcal{L}_{\mathrm{dcc}}$	res.	43.8	43.8	+0.0	42.9	42.9	+0.0
Unified Finsler	res.	43.4	43.4	+0.0	43.9	43.5	−0.4