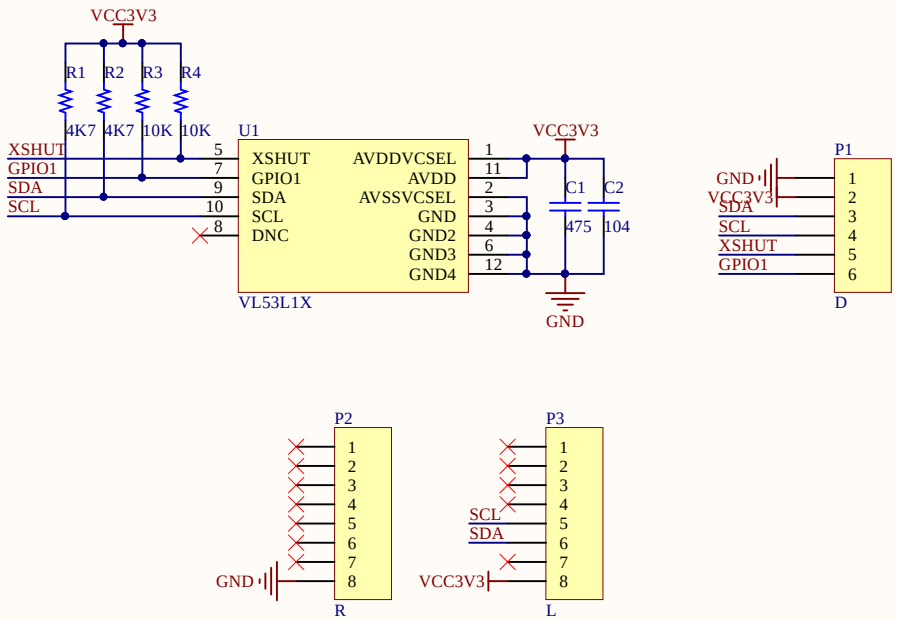

Title	TOF Distance Module	
Size A4	Number www.01Studio.org	Revision v1.0
Date: 2021-02-06		Sheet of
File: D:\公司资料\..\01Studio_VL53L1X_v1.0.SchDoc		Drawn By:

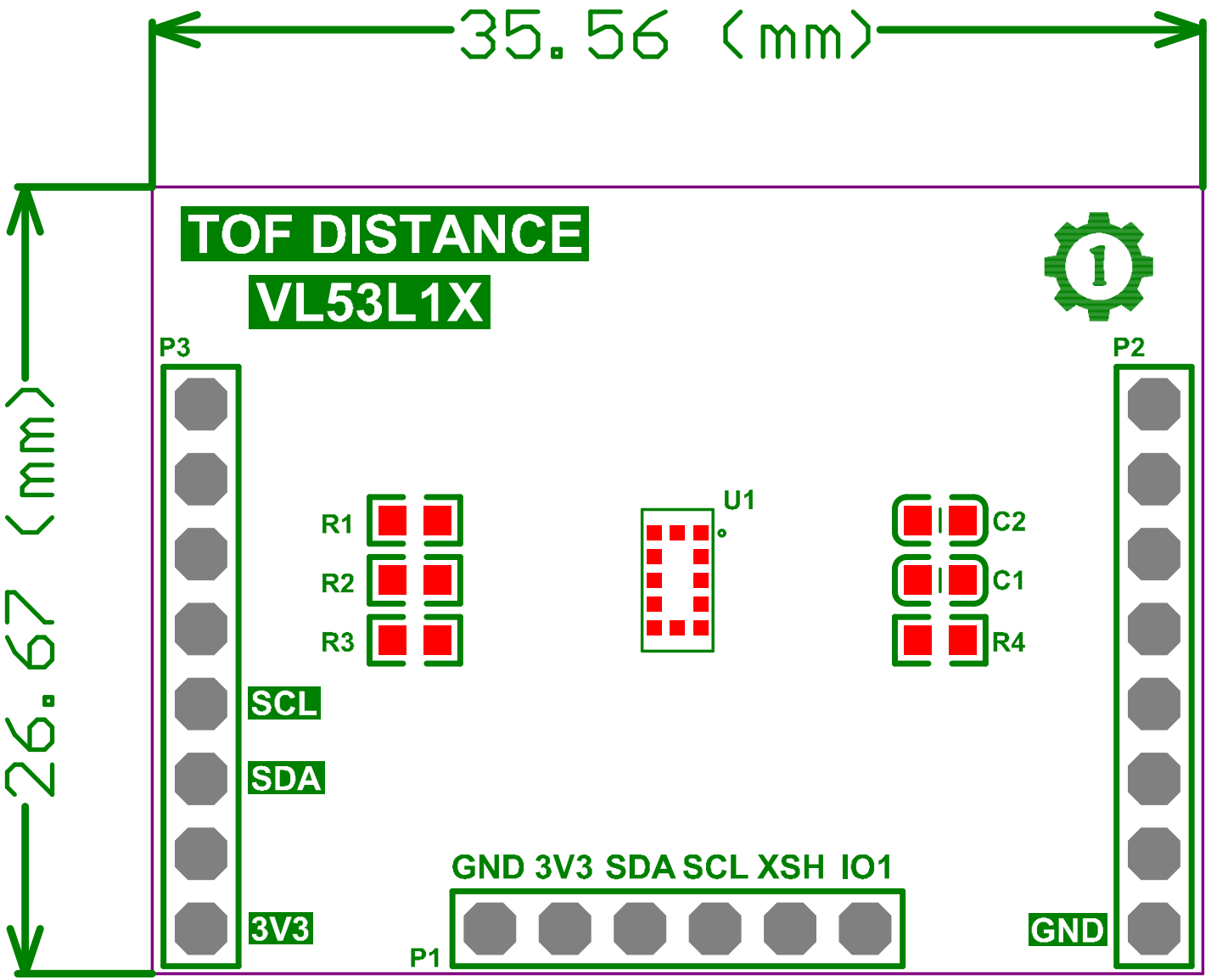
35.56 (mm)
26.67 (mm)
TOF DISTANCE
VL53L1X
P3
P2
R1
R2
R3
U1
C2
C1
R4
SCL
SDA
3V3
GND 3V3 SDA SCL XSH IO1
P1
GND