REVISION RECORD			
LTR	ECO NO:	APPROVED:	DATE:

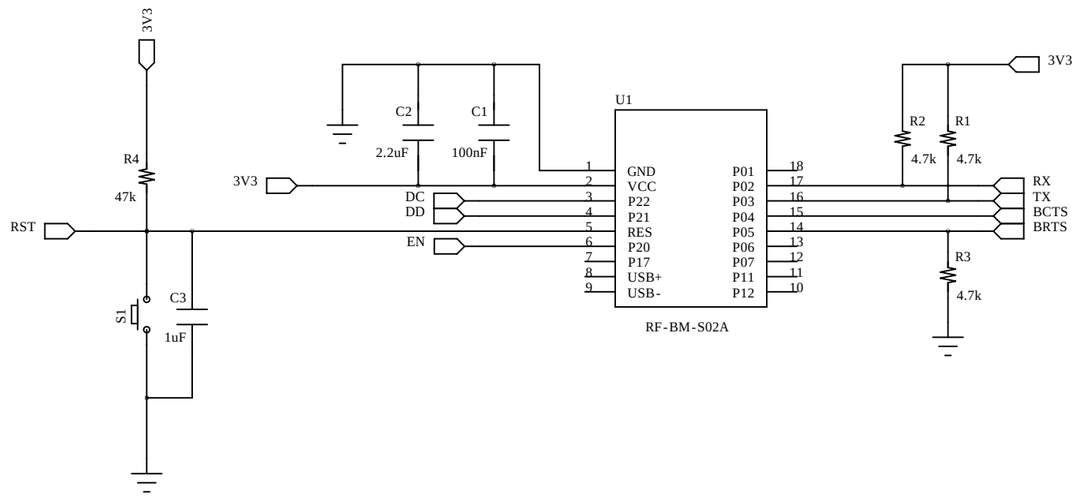

DRAWN: <Drawn By>	DATED: <Drawn Date>	COMPANY: RF-Star	
CHECKED: <Checked By>	DATED: <Checked Date>	TITLE: RF-BM-S02A-Application	
QUALITY CONTROL: <QC By>	DATED: <QC Date>	CODE: <Code>	SIZE: B
RELEASED: <Released By>	DATED: <Release Date>	DRAWING NO: <Drawing Number>	REV: <Revision>
		SCALE: <Scale>	SHEET: 1 OF 1