1

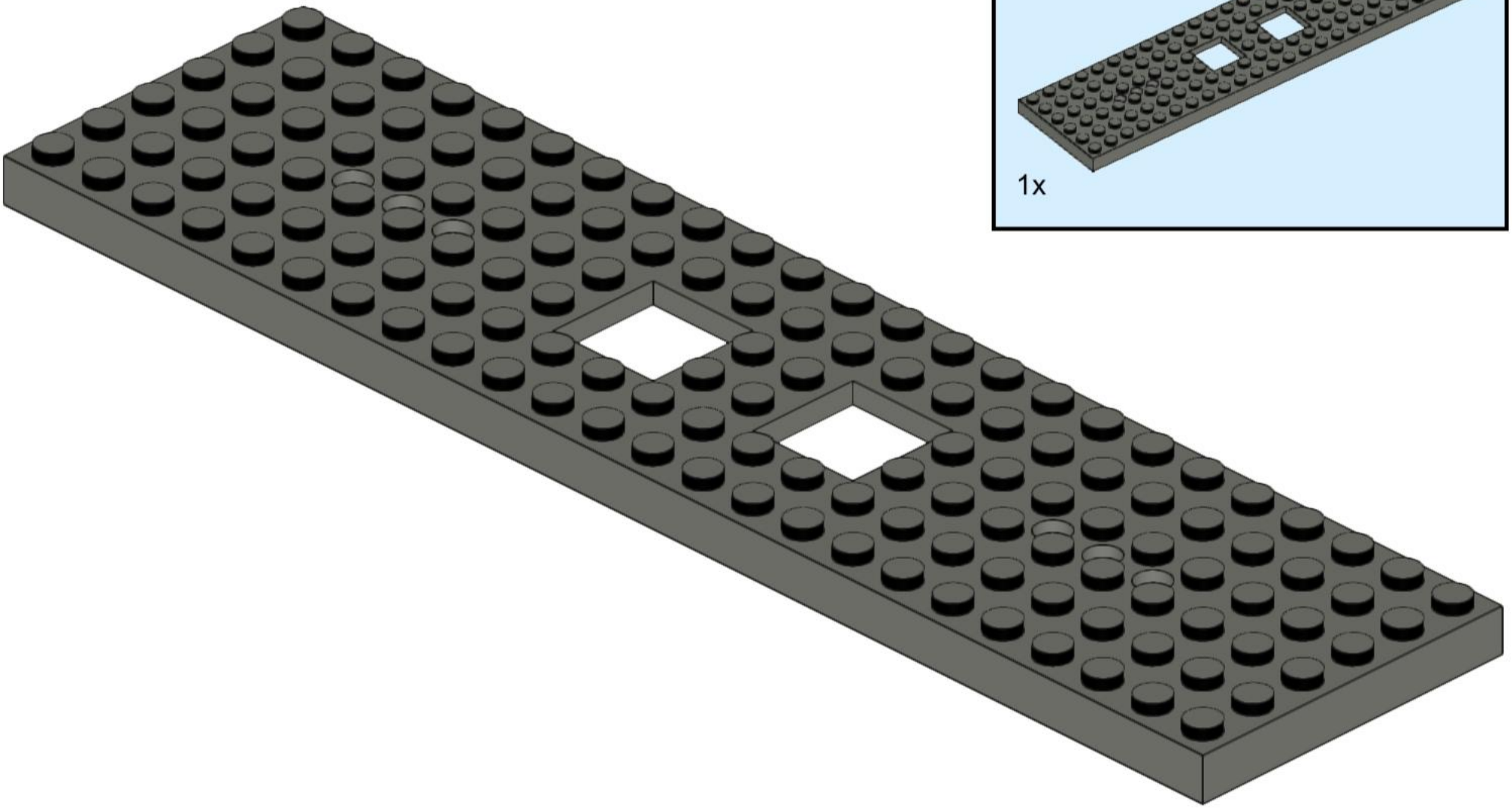

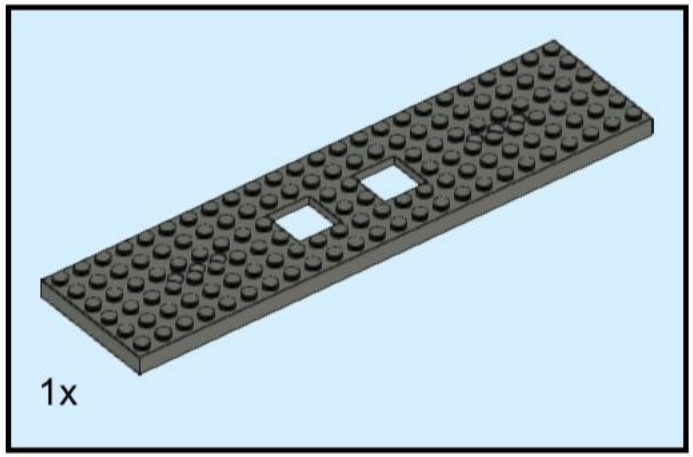

2

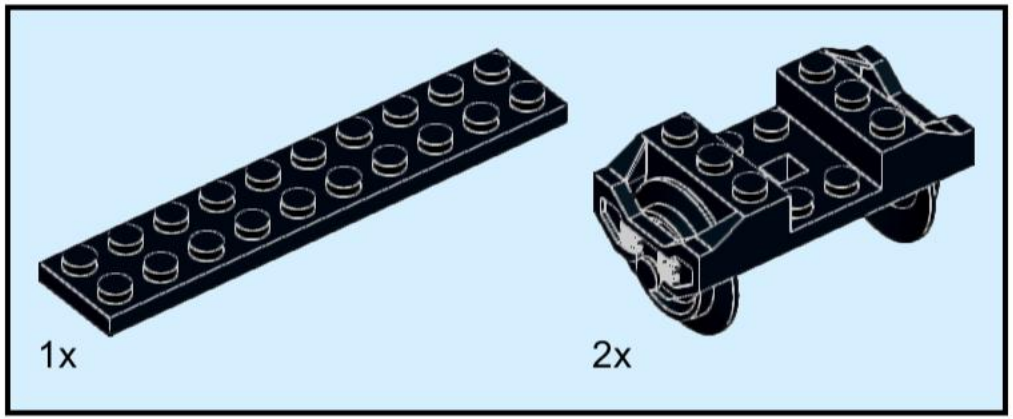

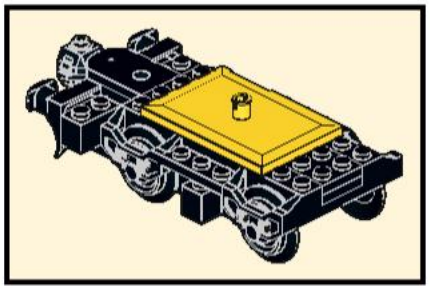

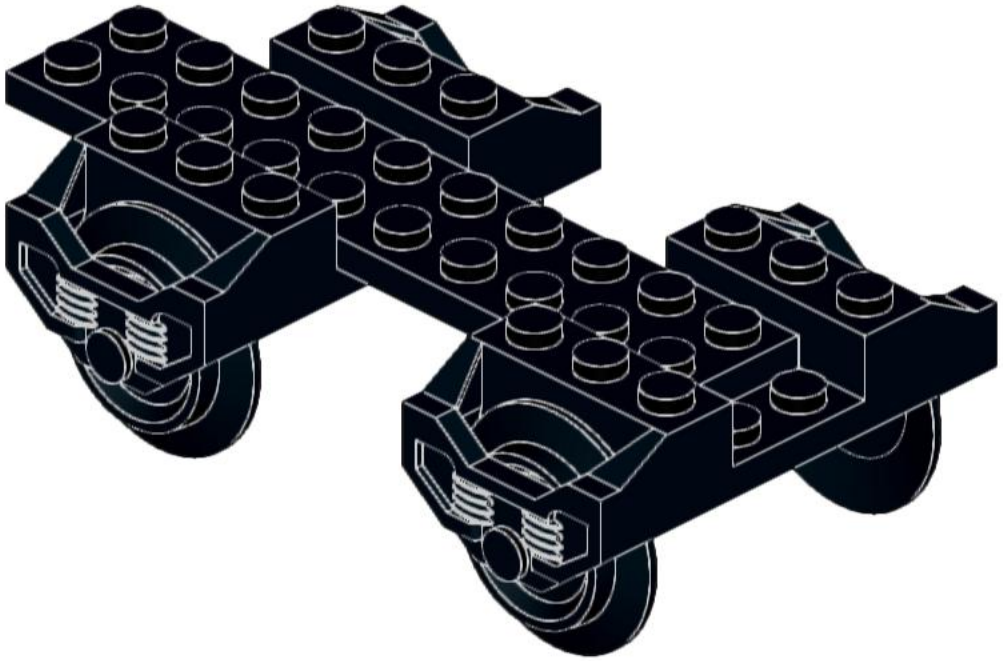

3

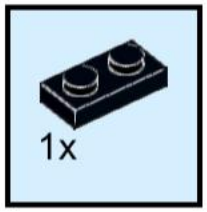

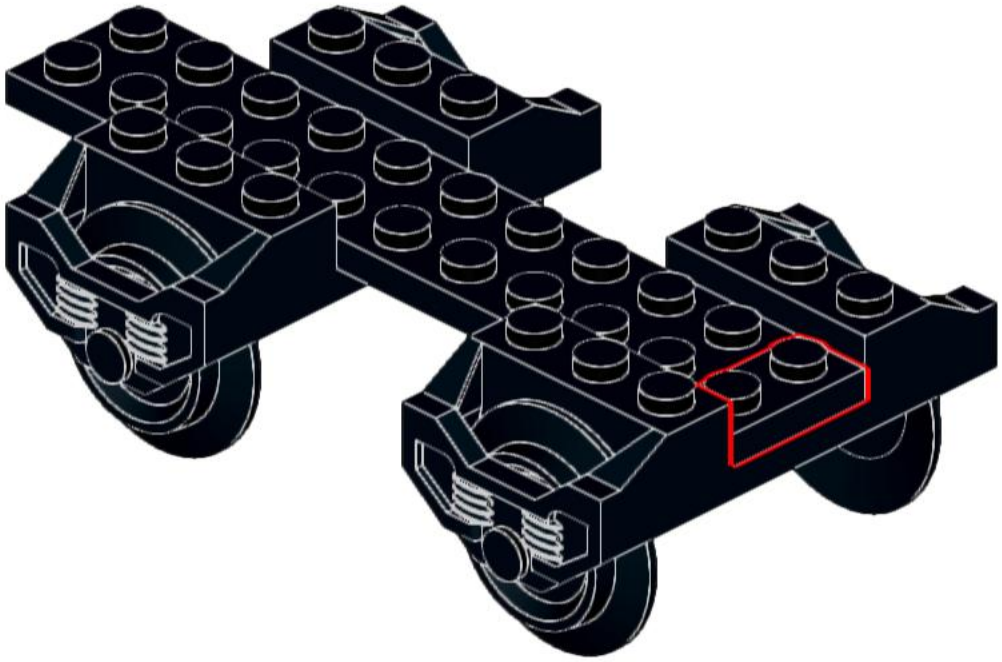

4

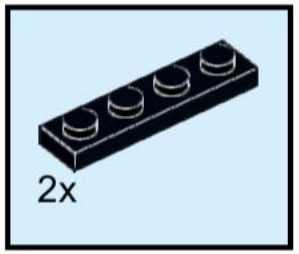

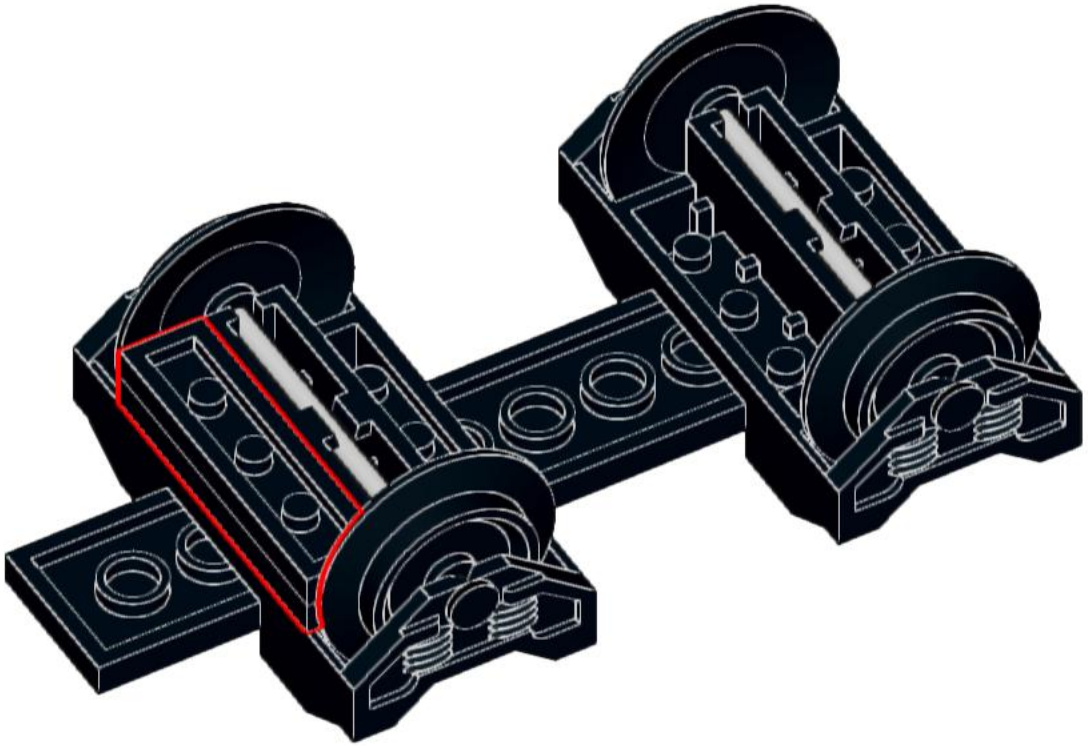

5

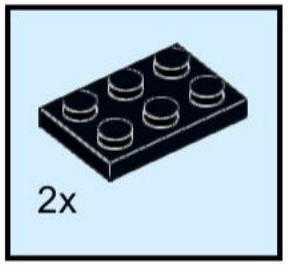

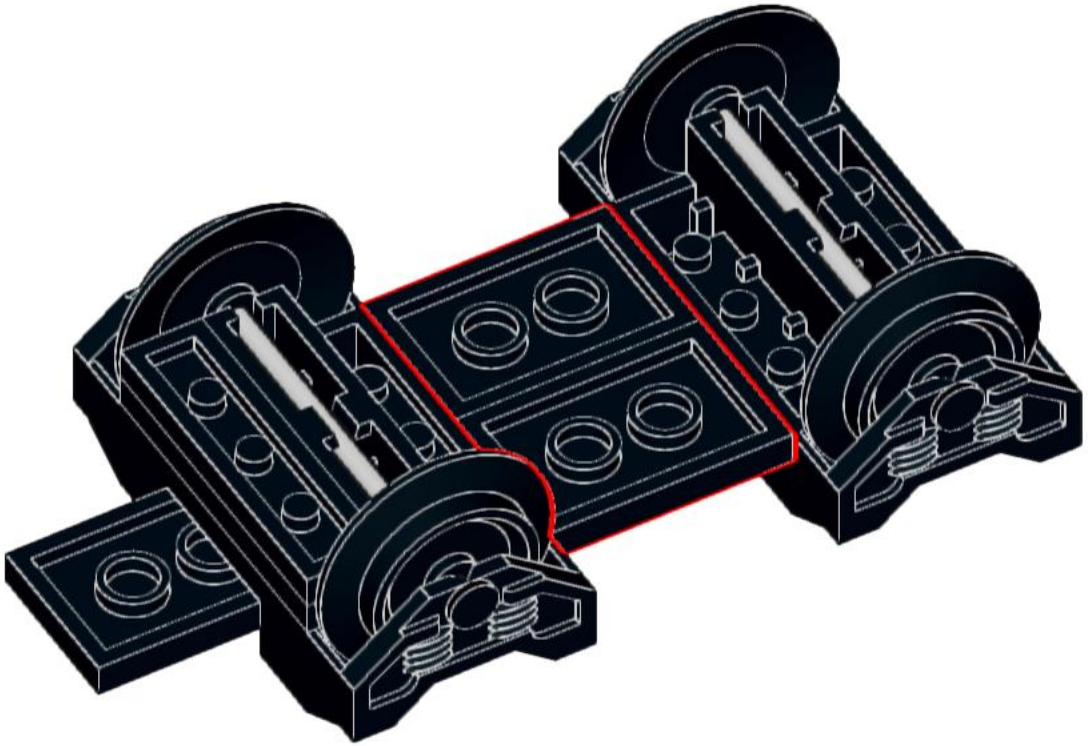

6

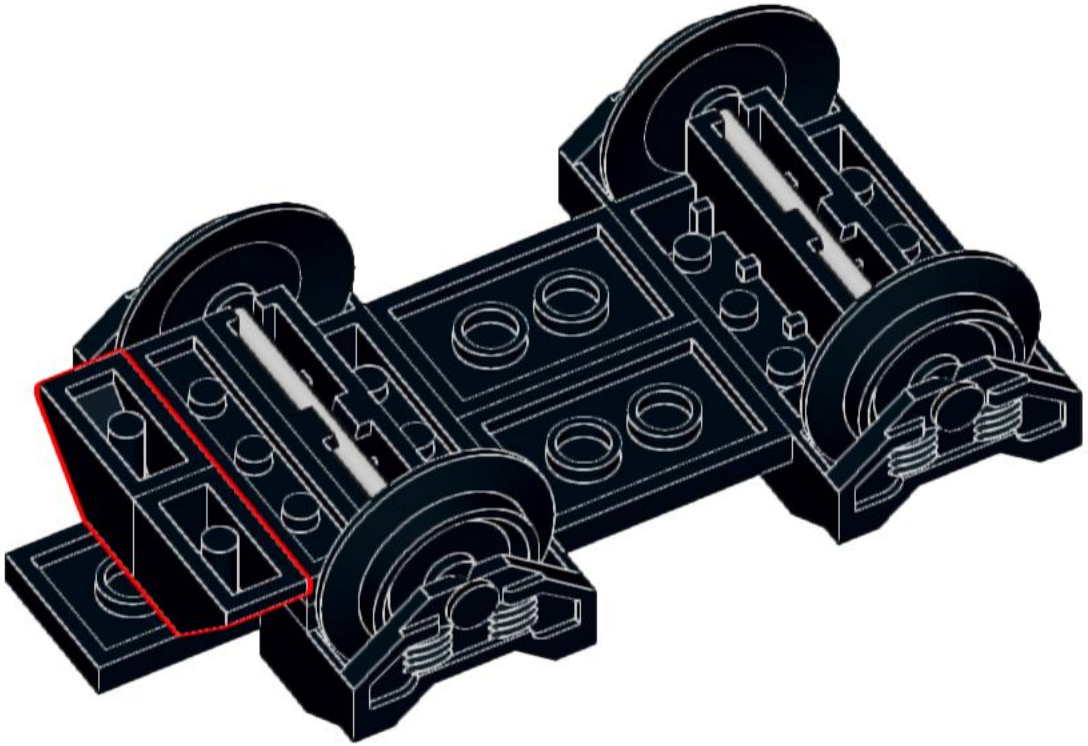

7

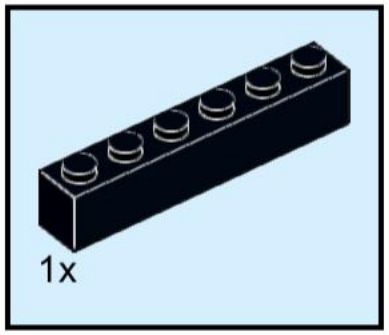

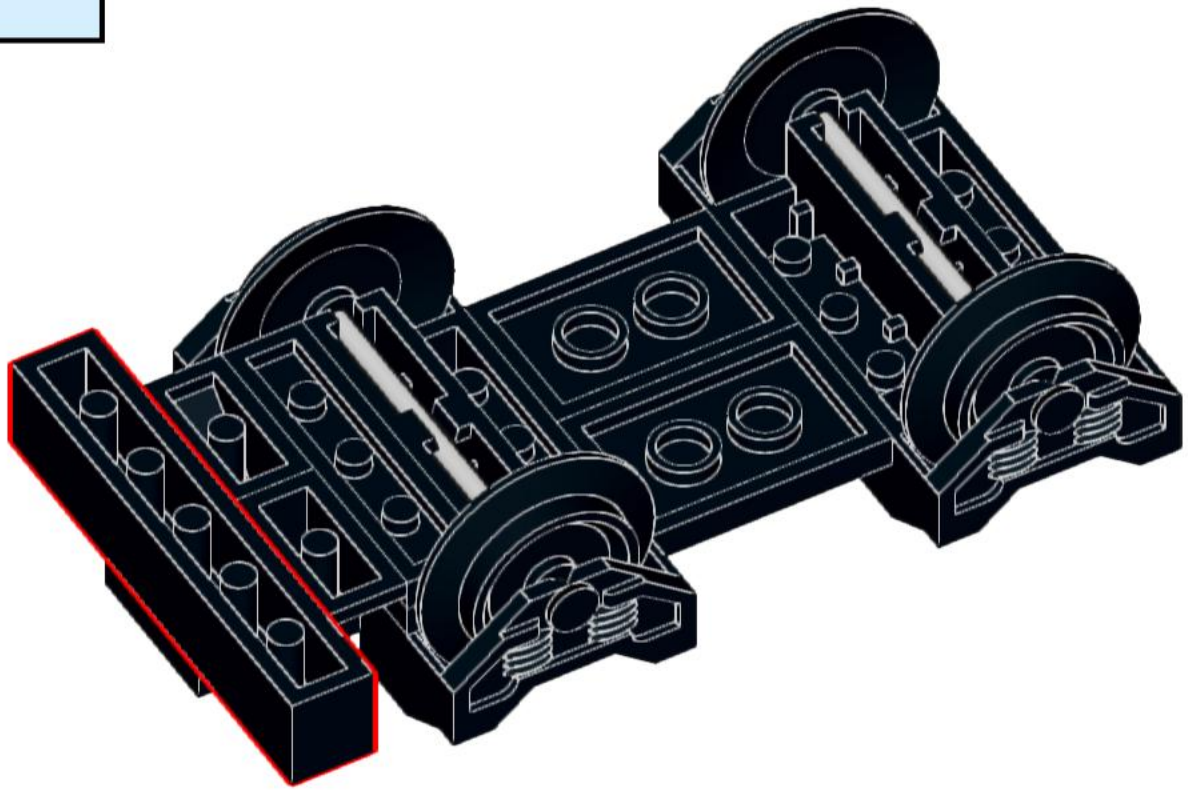

8

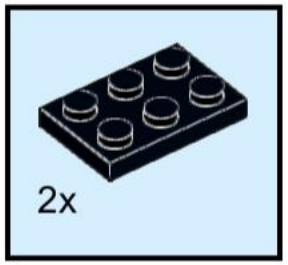

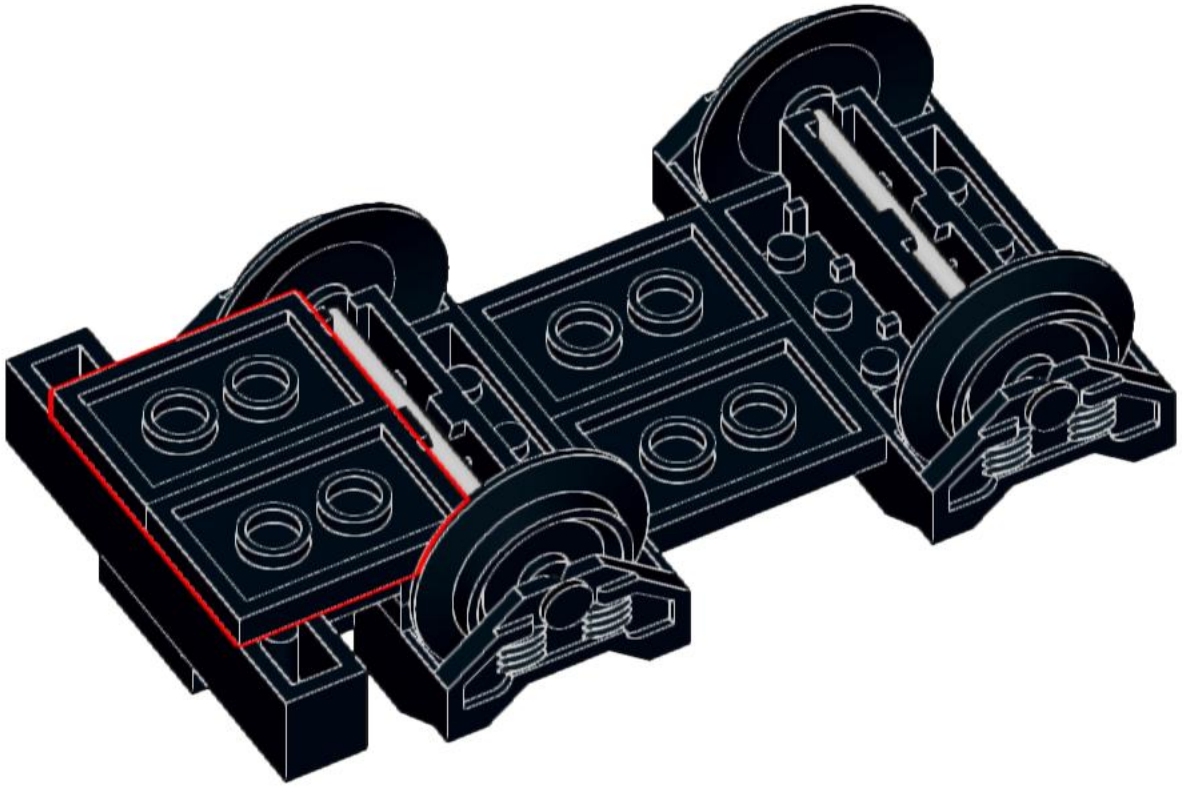

9

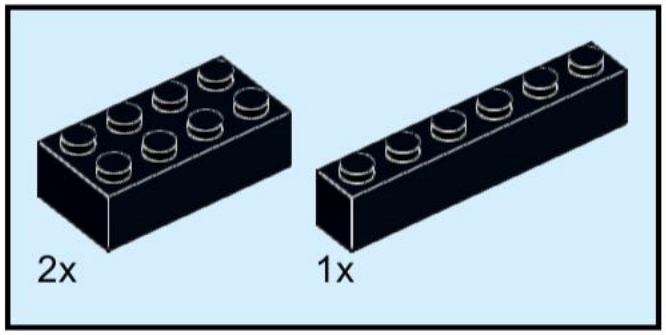

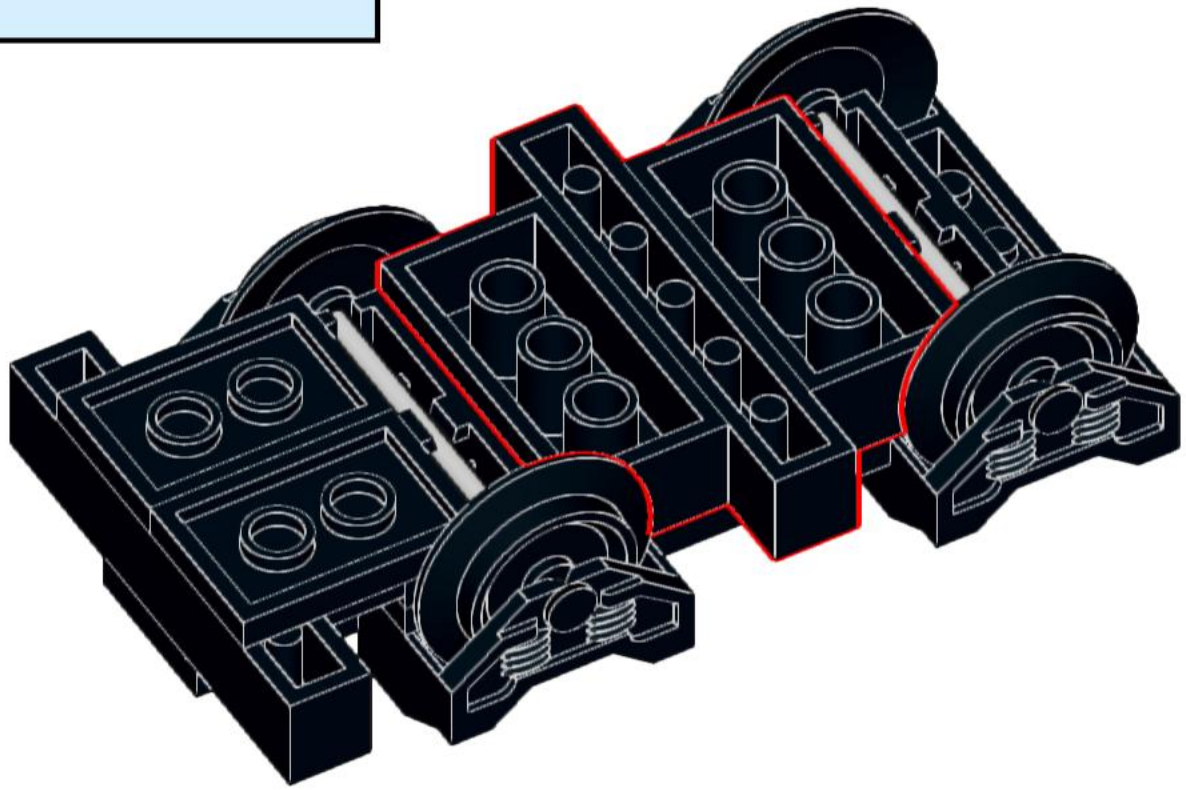

10

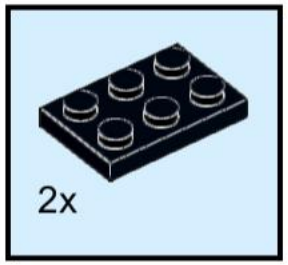

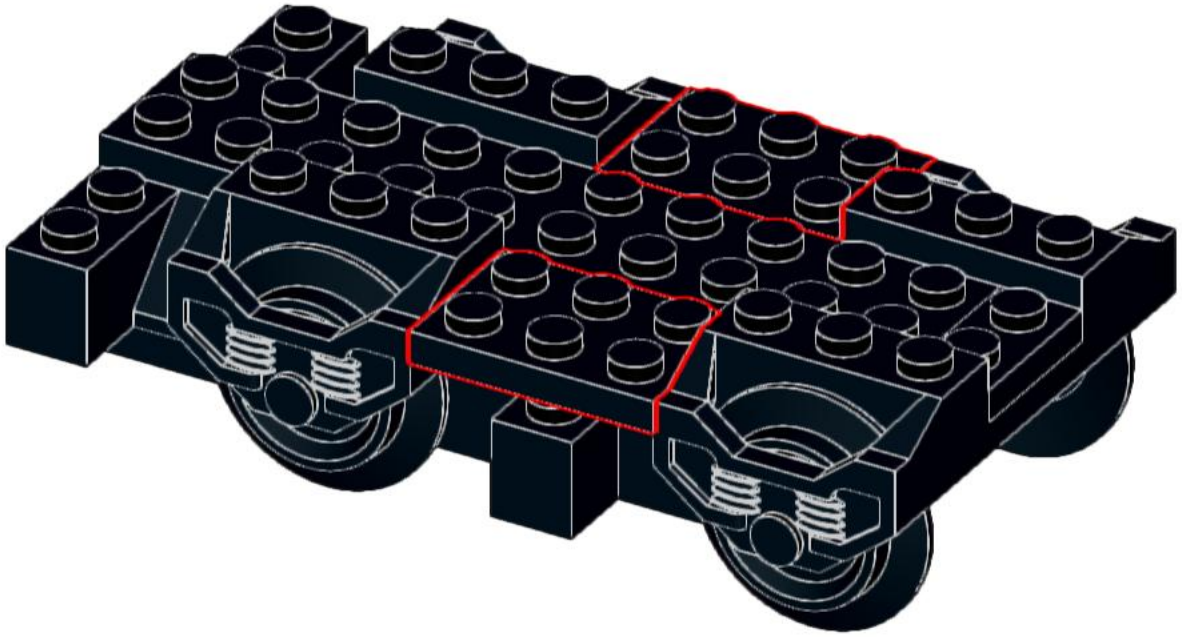

11

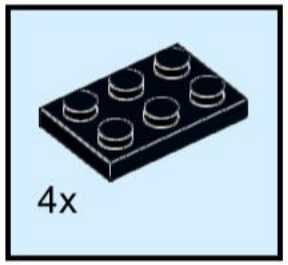

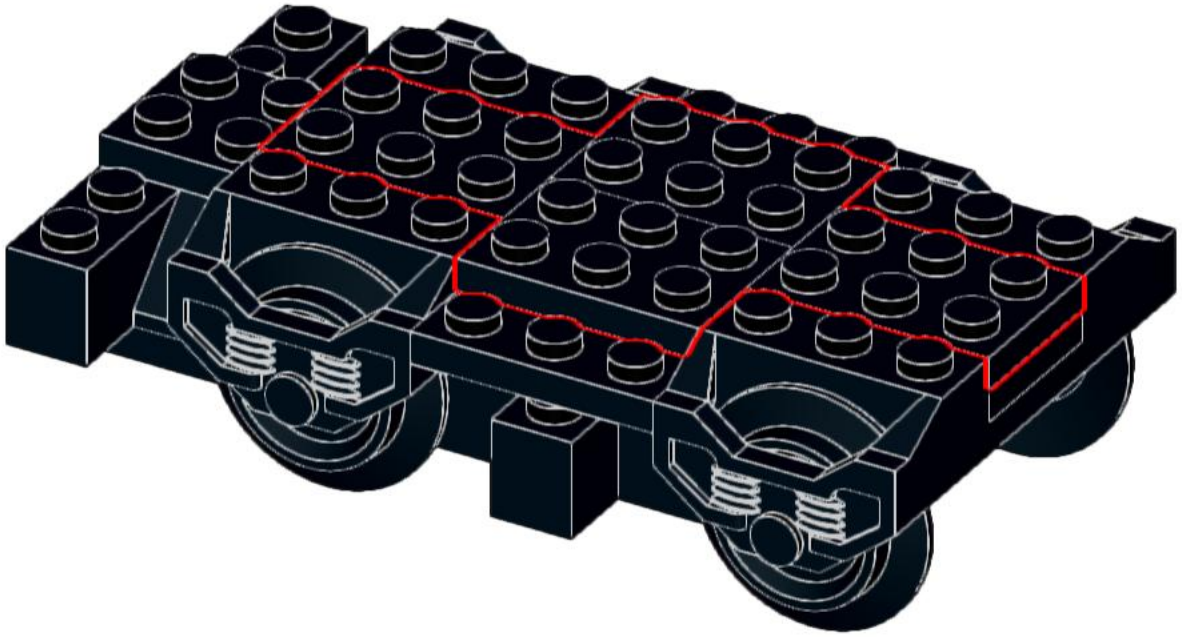

12

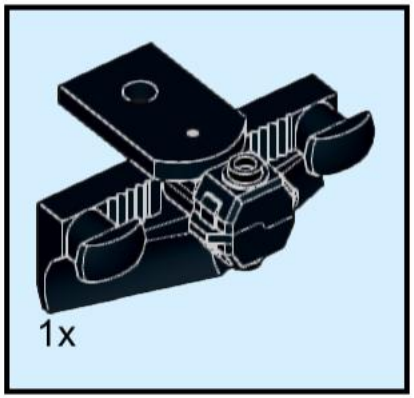

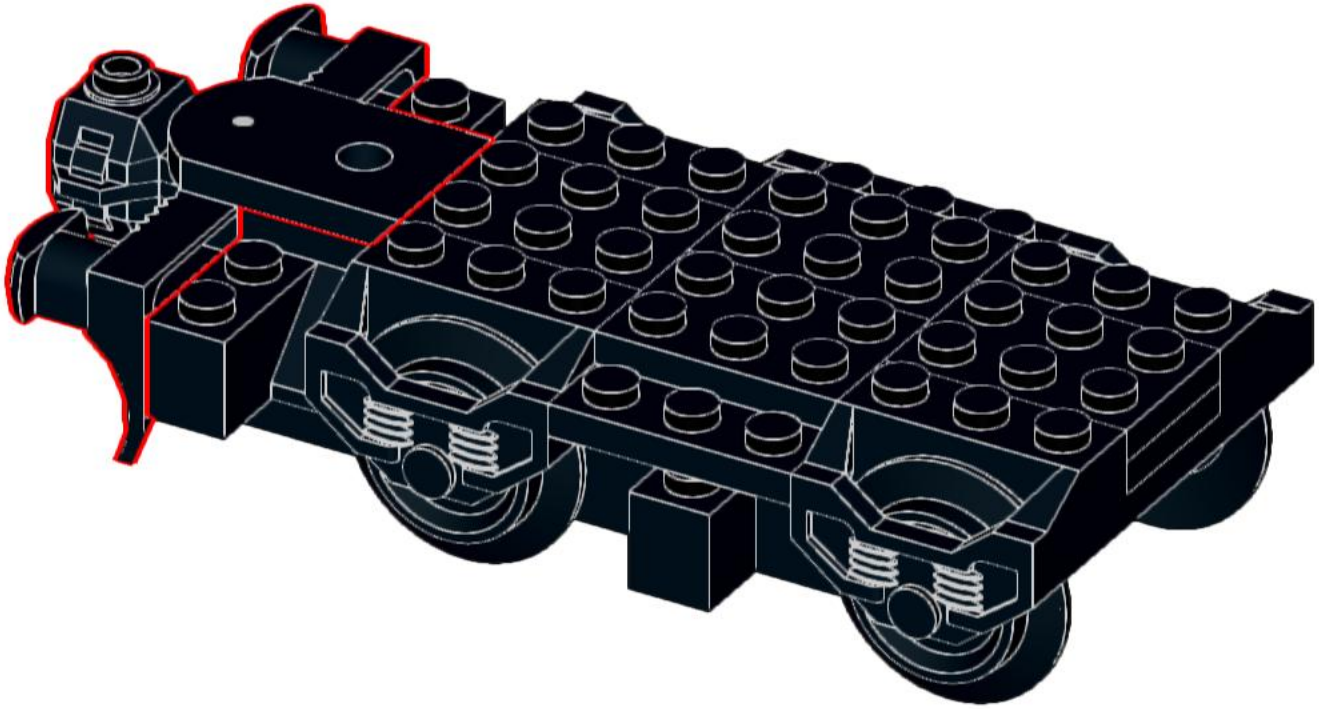

13

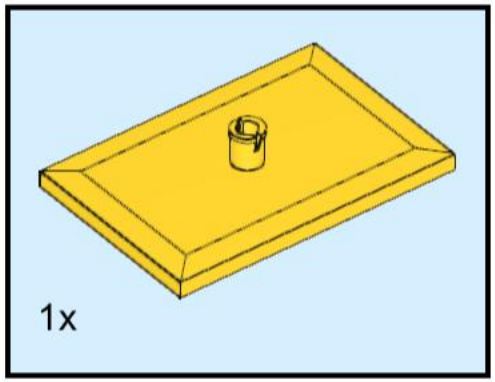

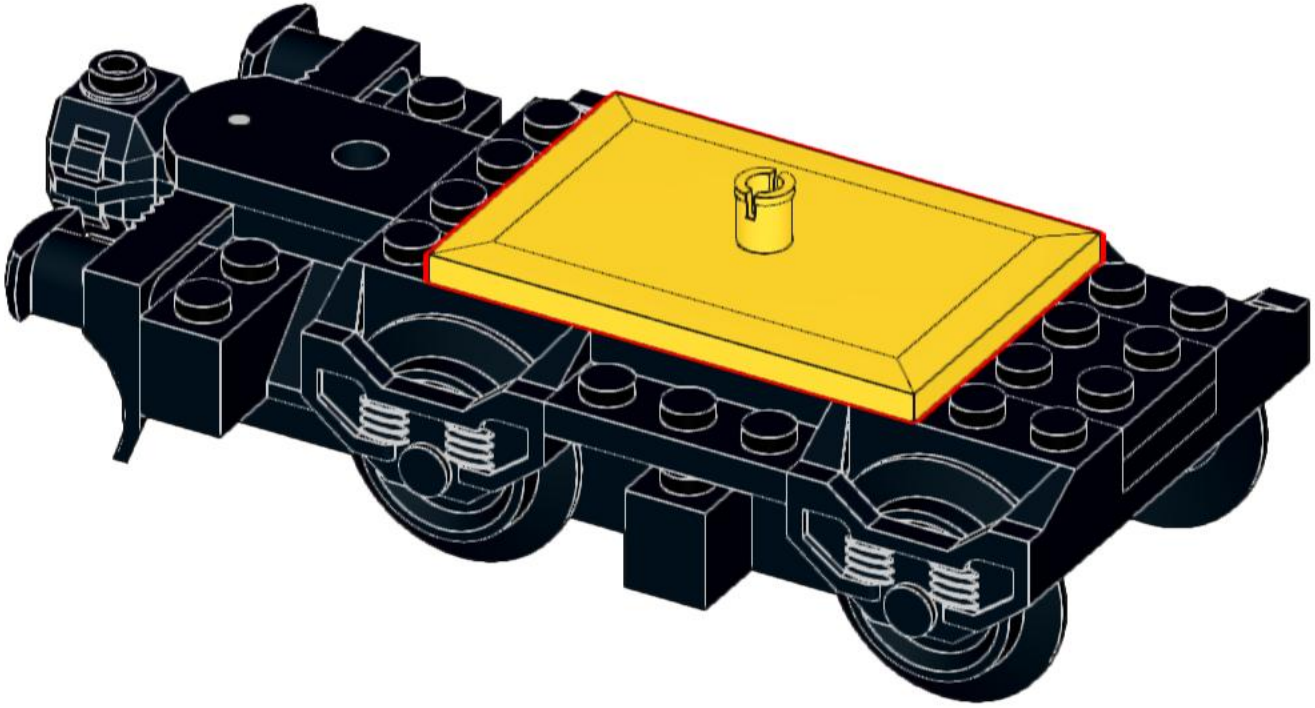

14

15

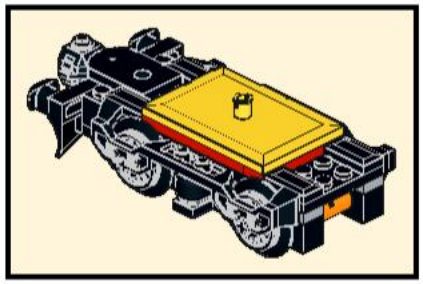

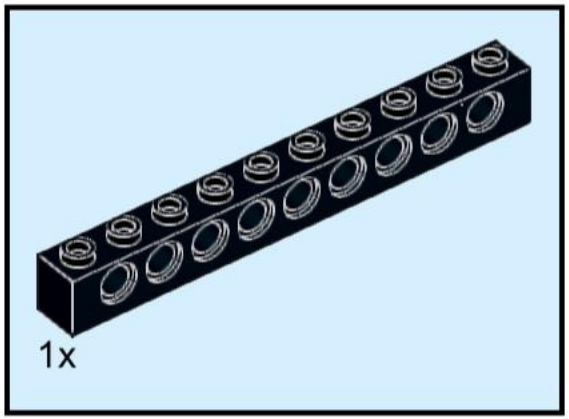

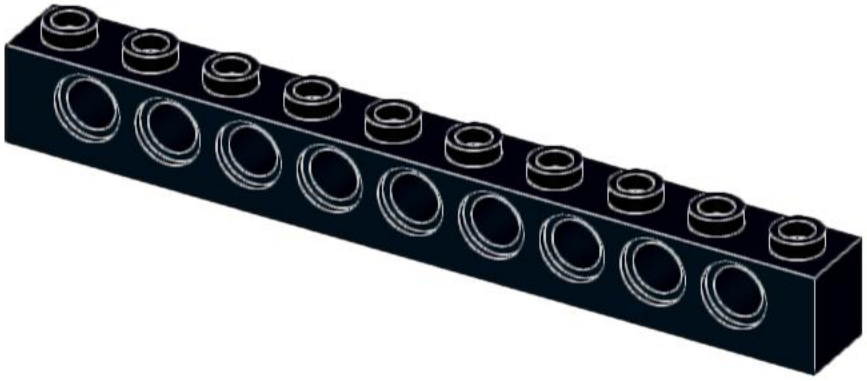

16

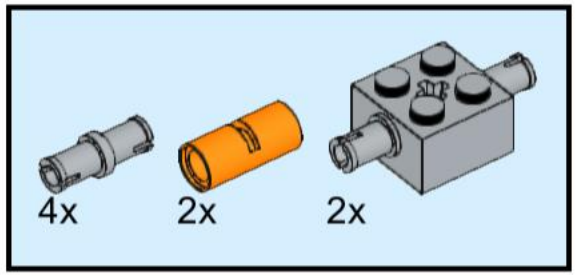

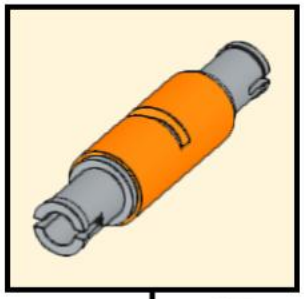

2x

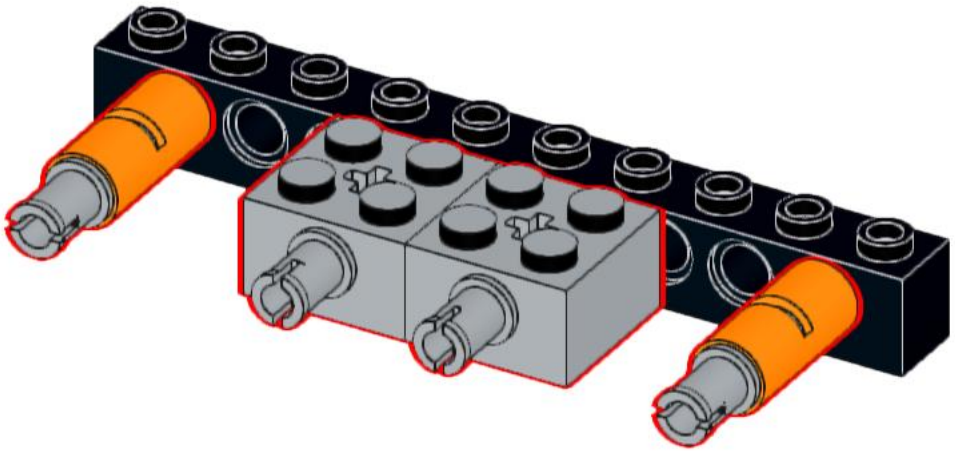

17

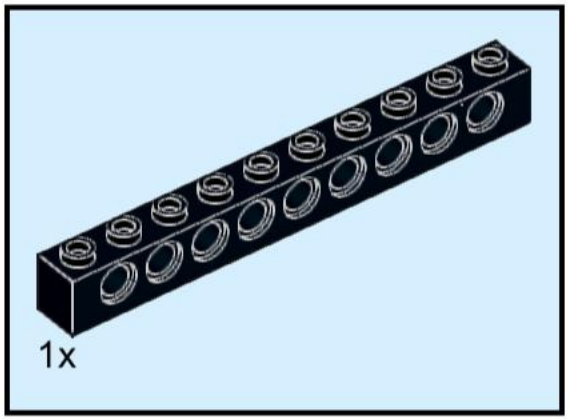

18

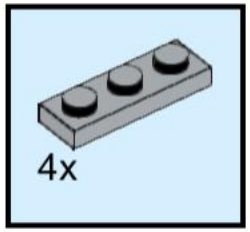

19

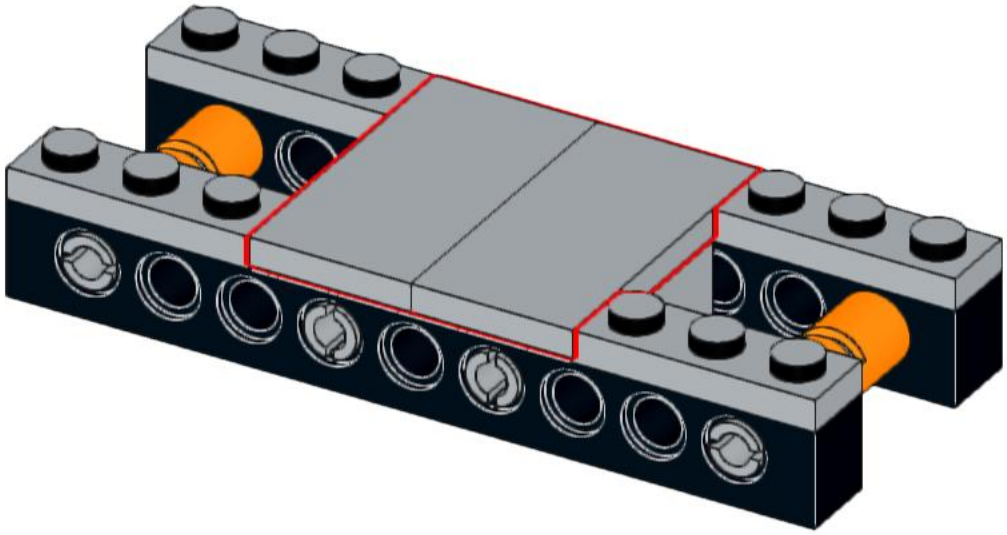

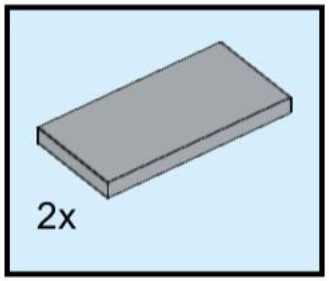

20

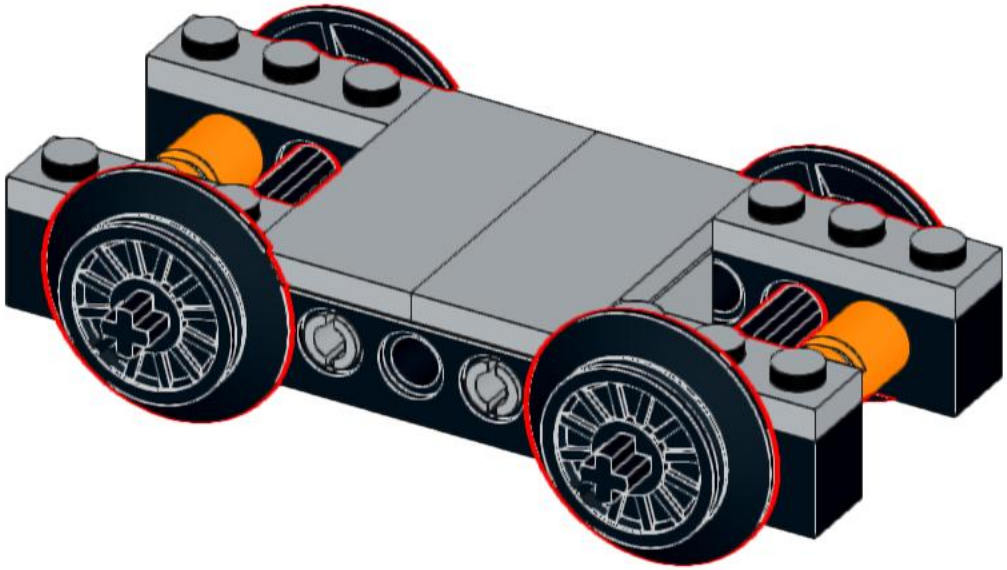

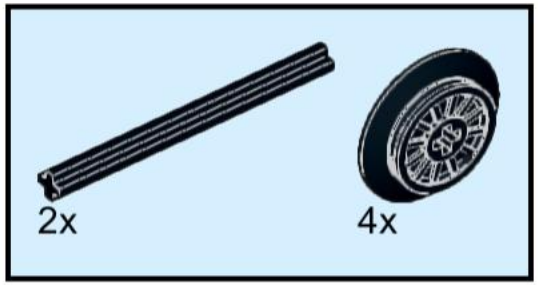

21

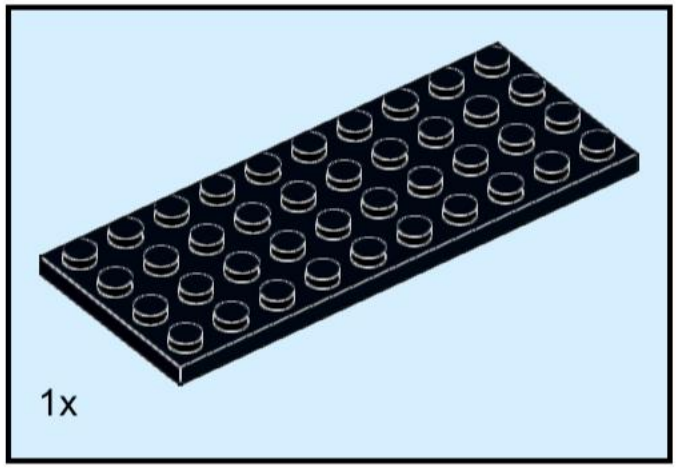

22

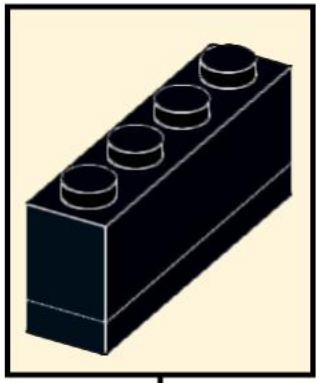

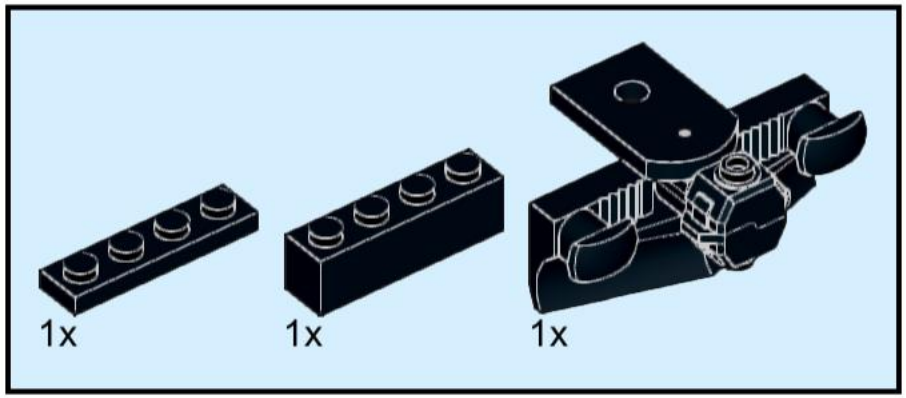

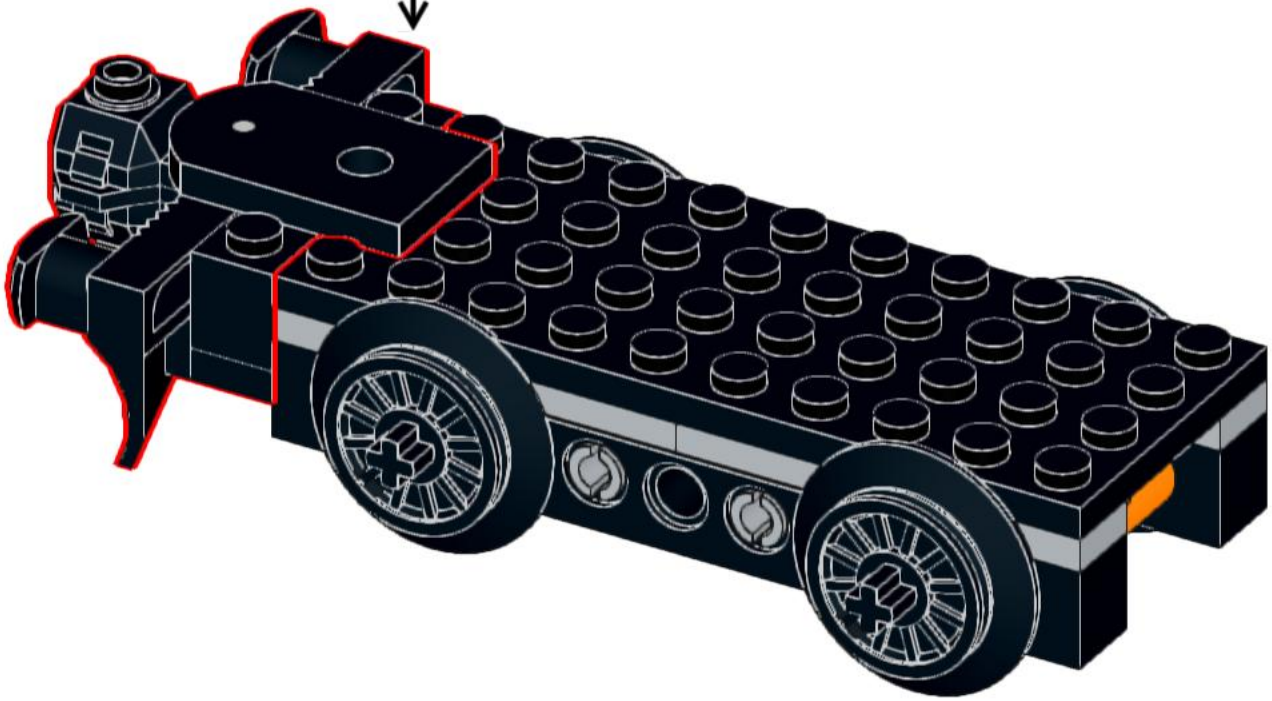

23

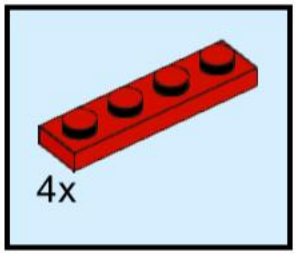

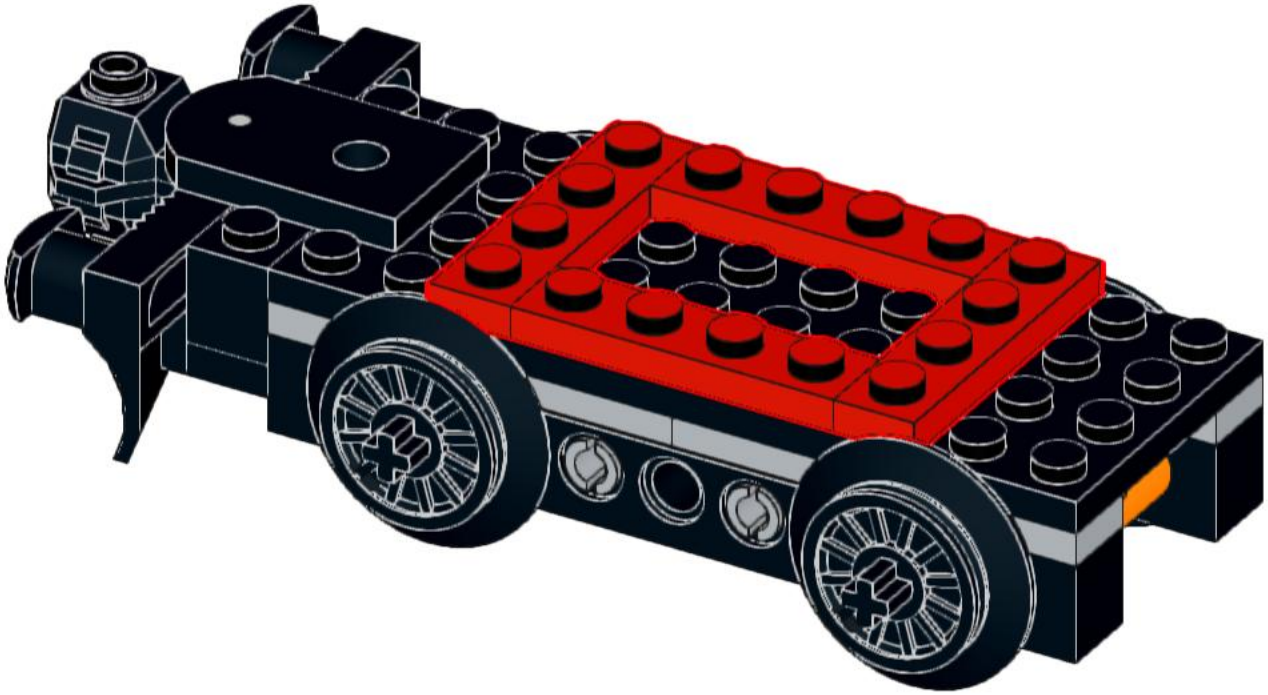

24

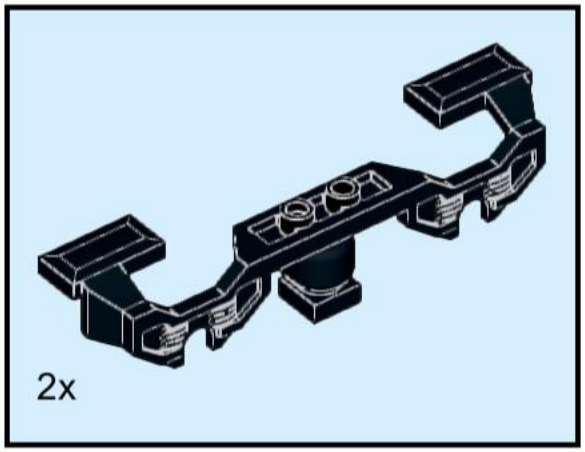

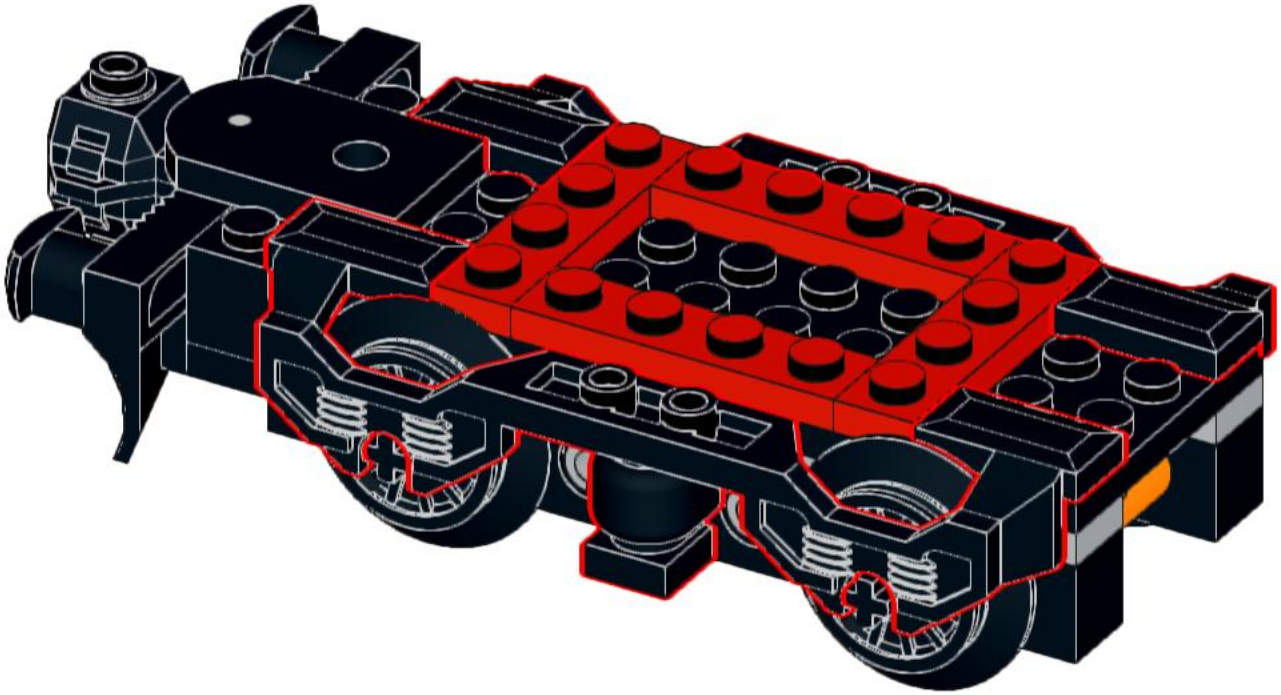

25

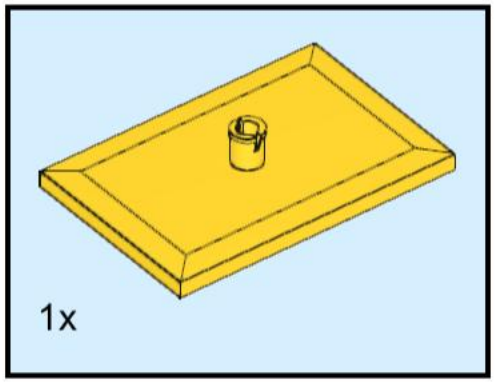

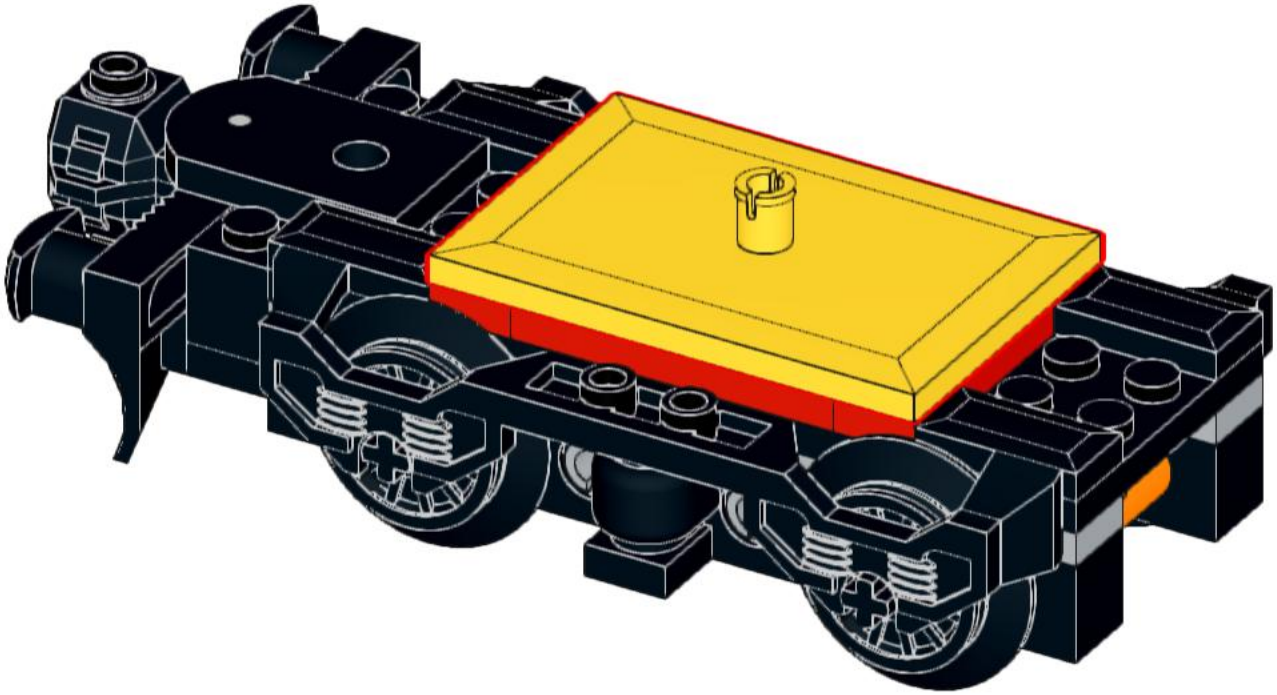

26

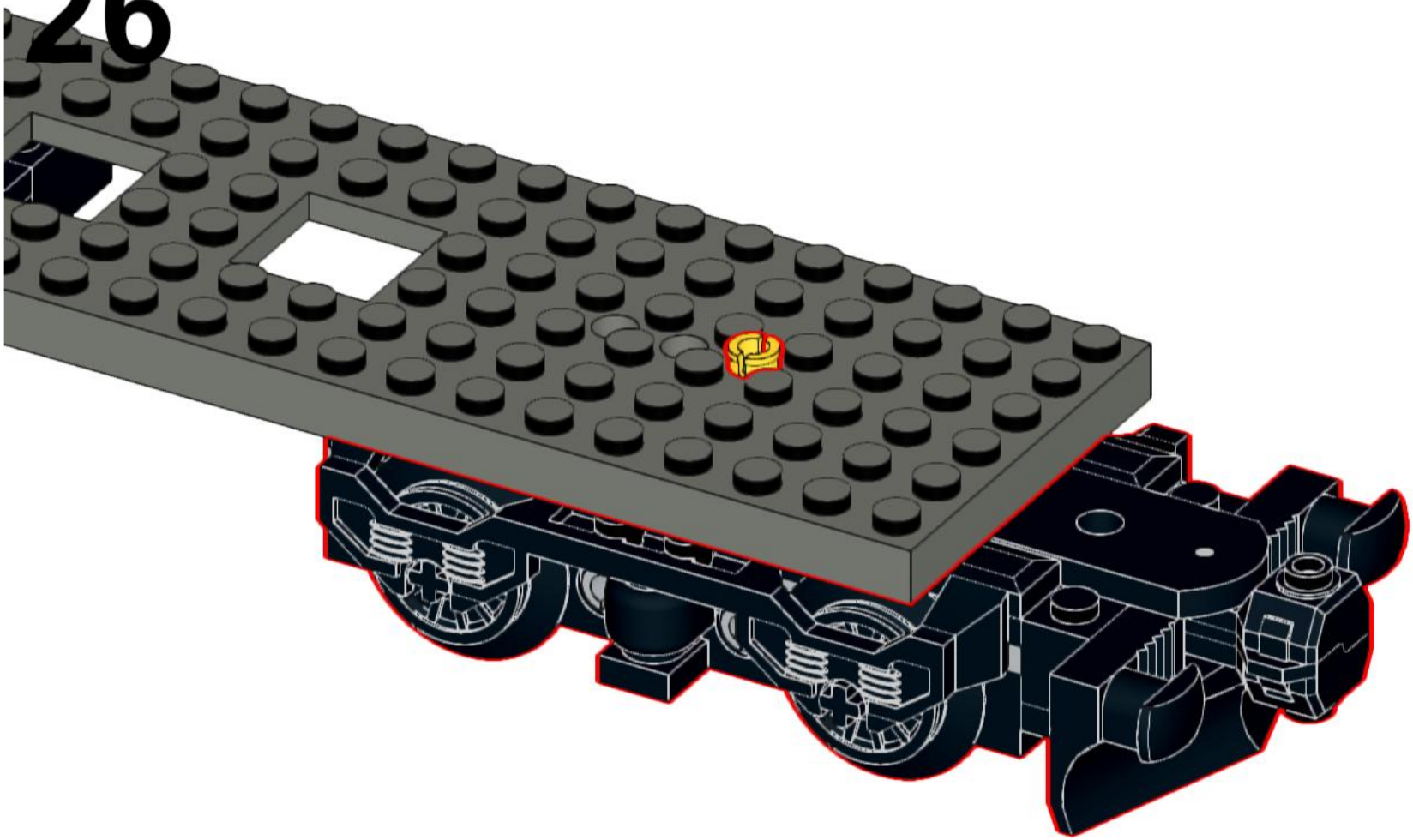

27

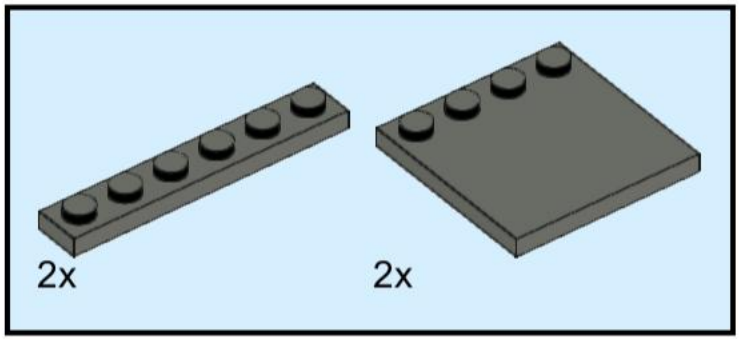

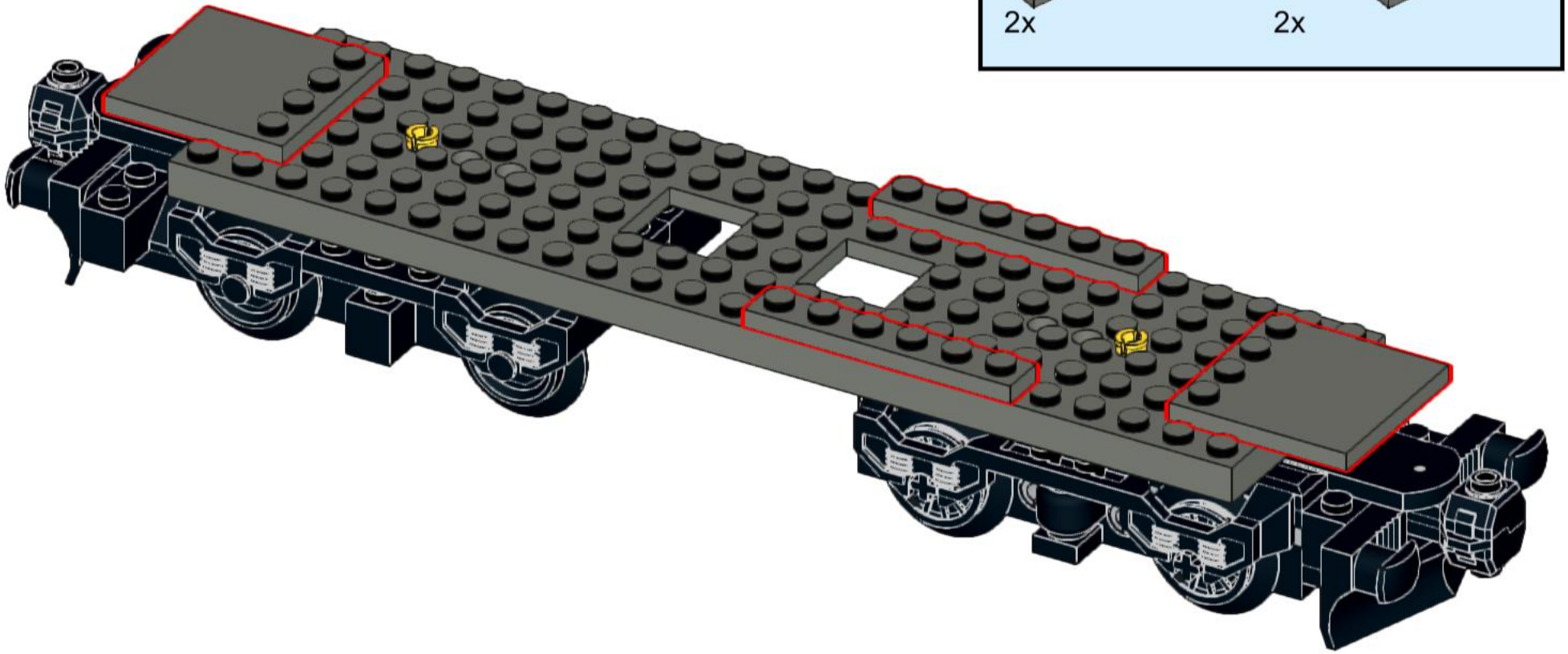

28

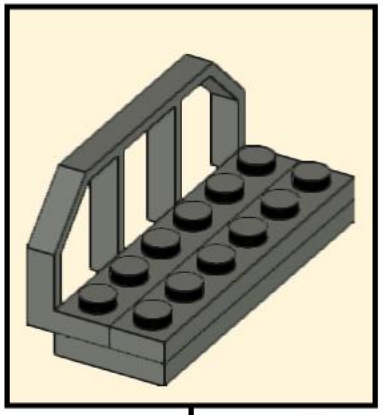

2x

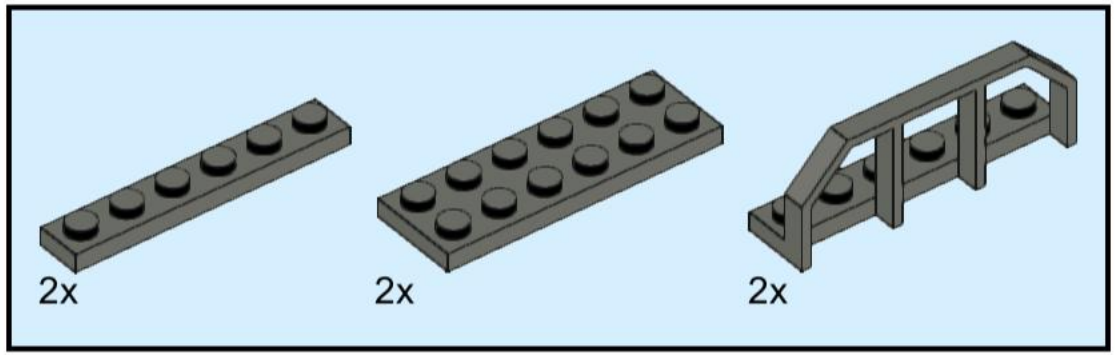

29

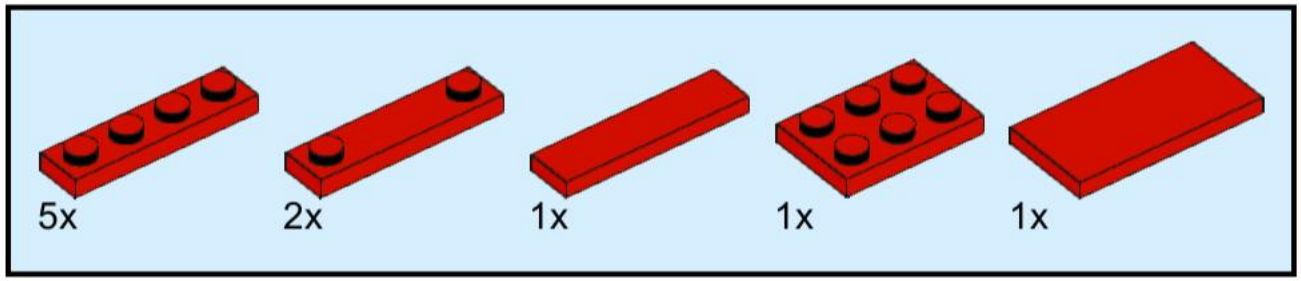

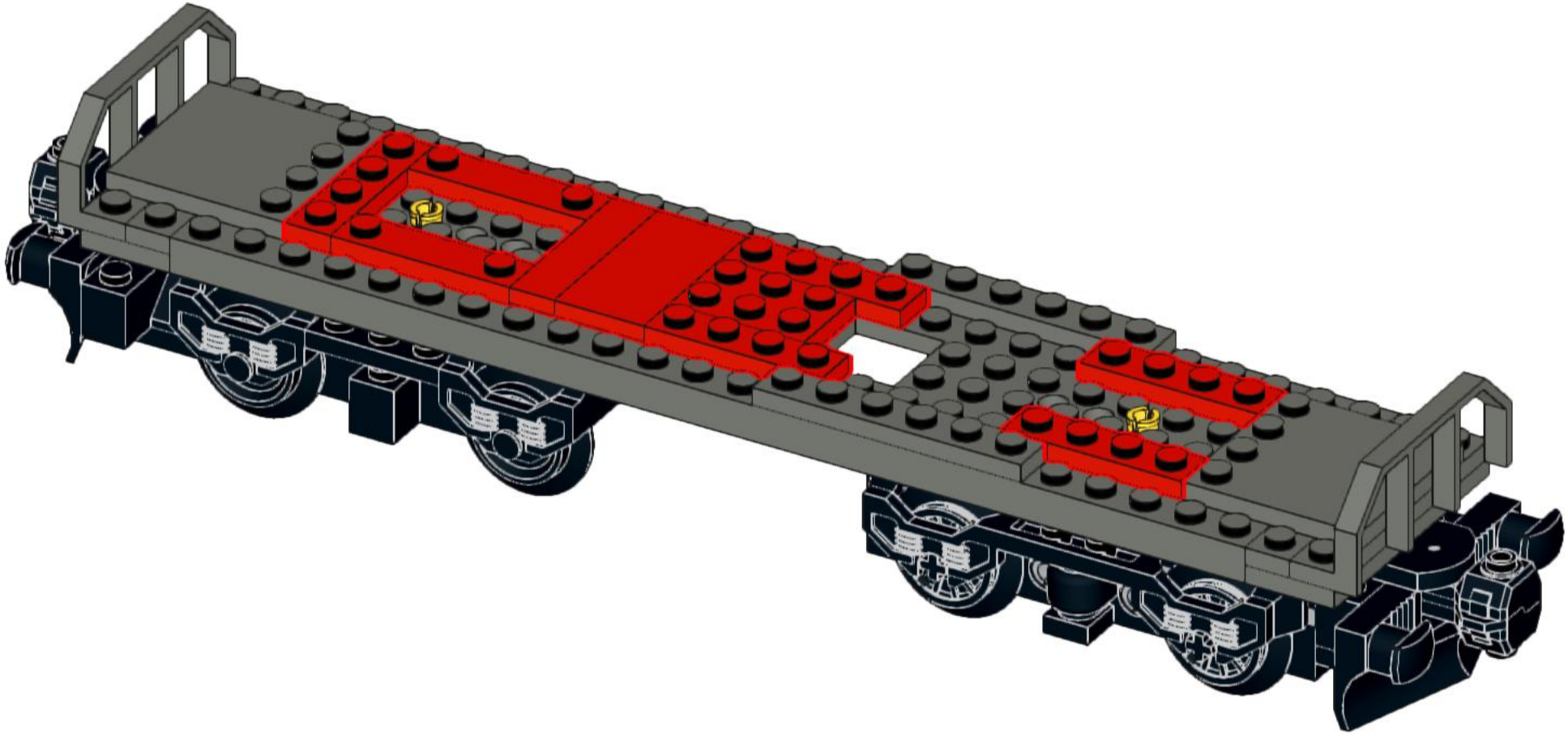

30

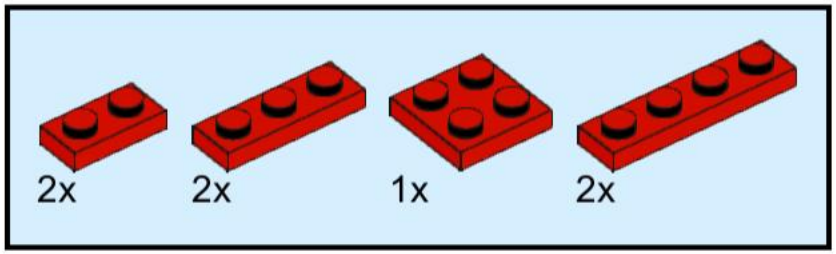

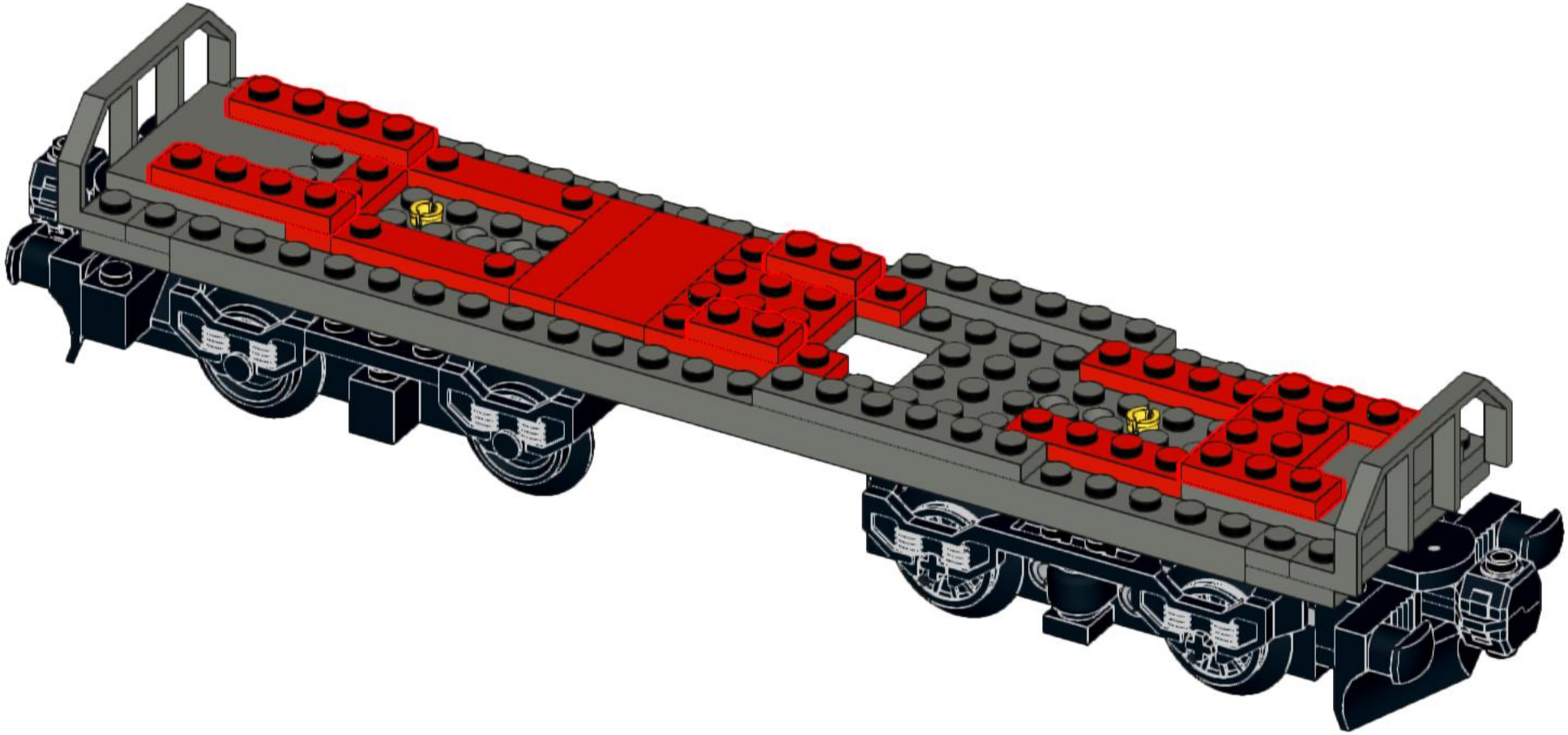

31

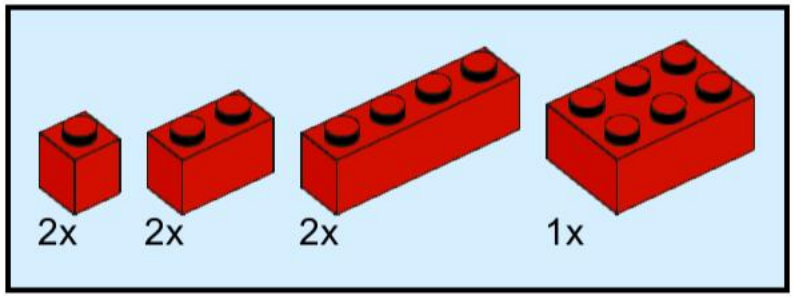

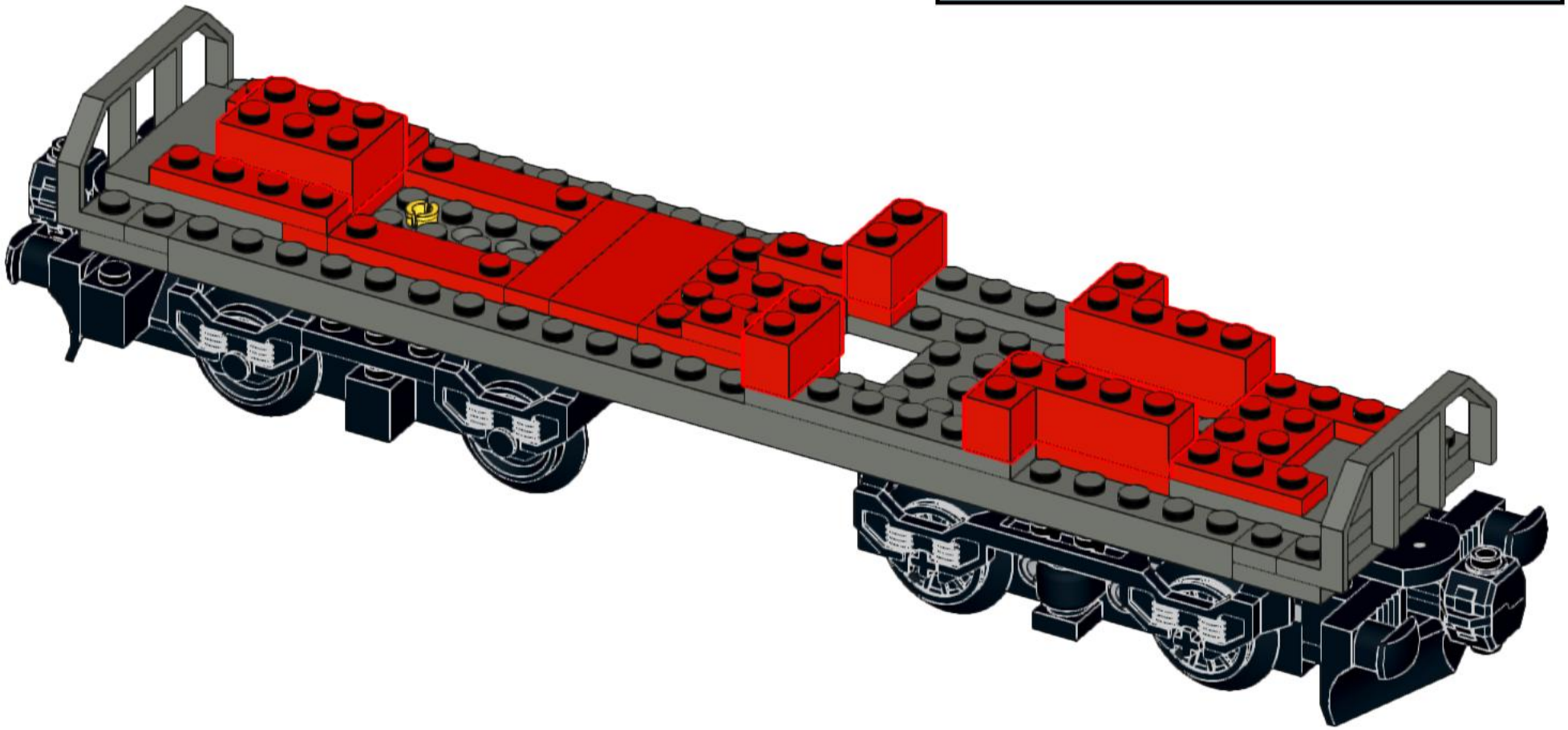

32

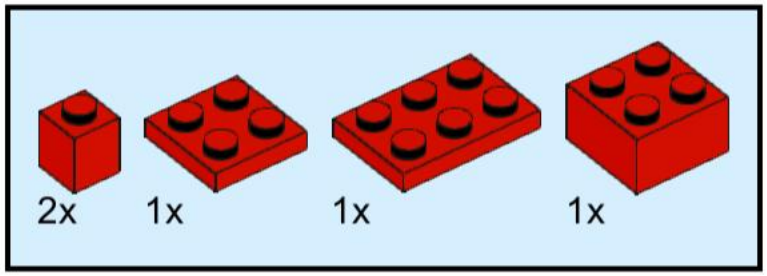

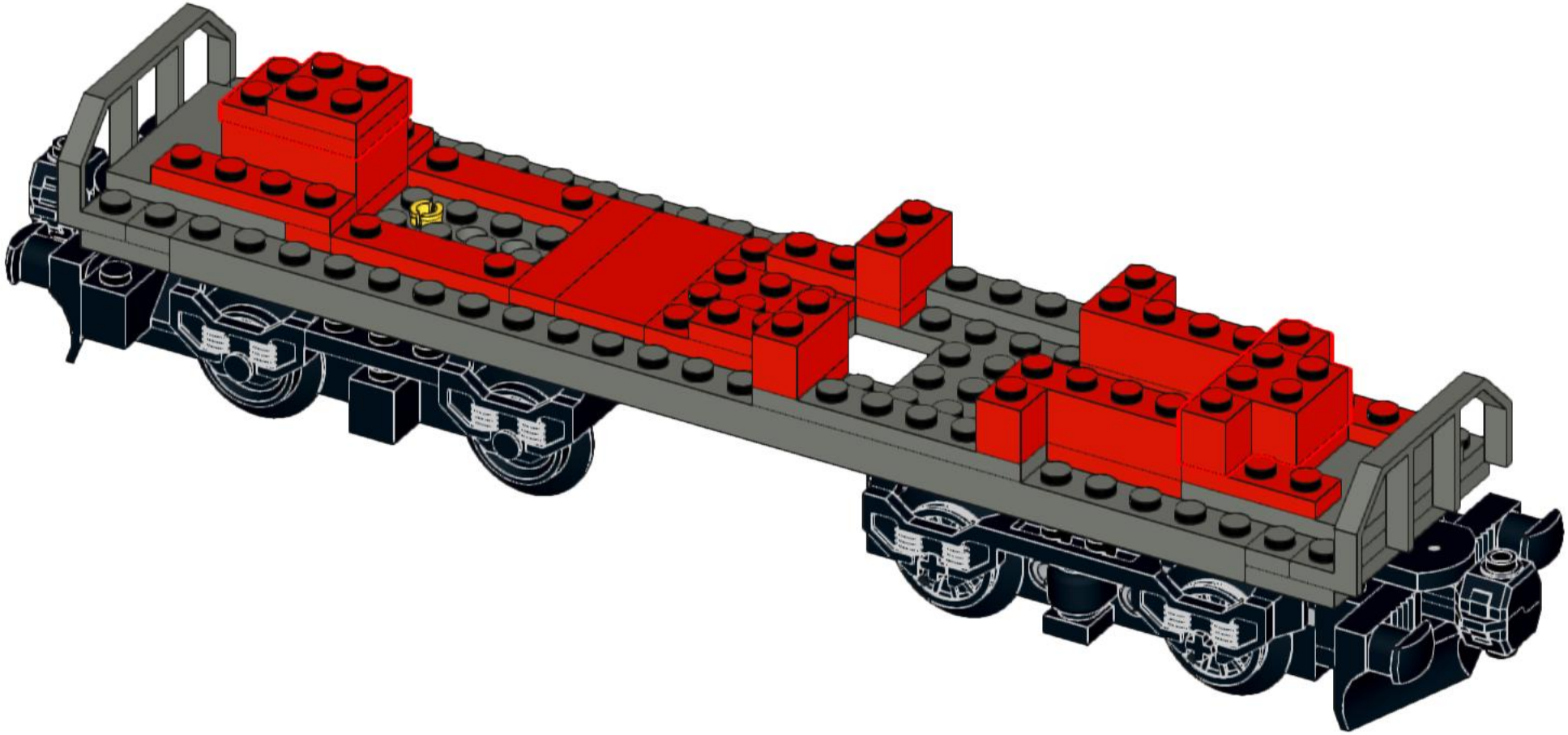

33

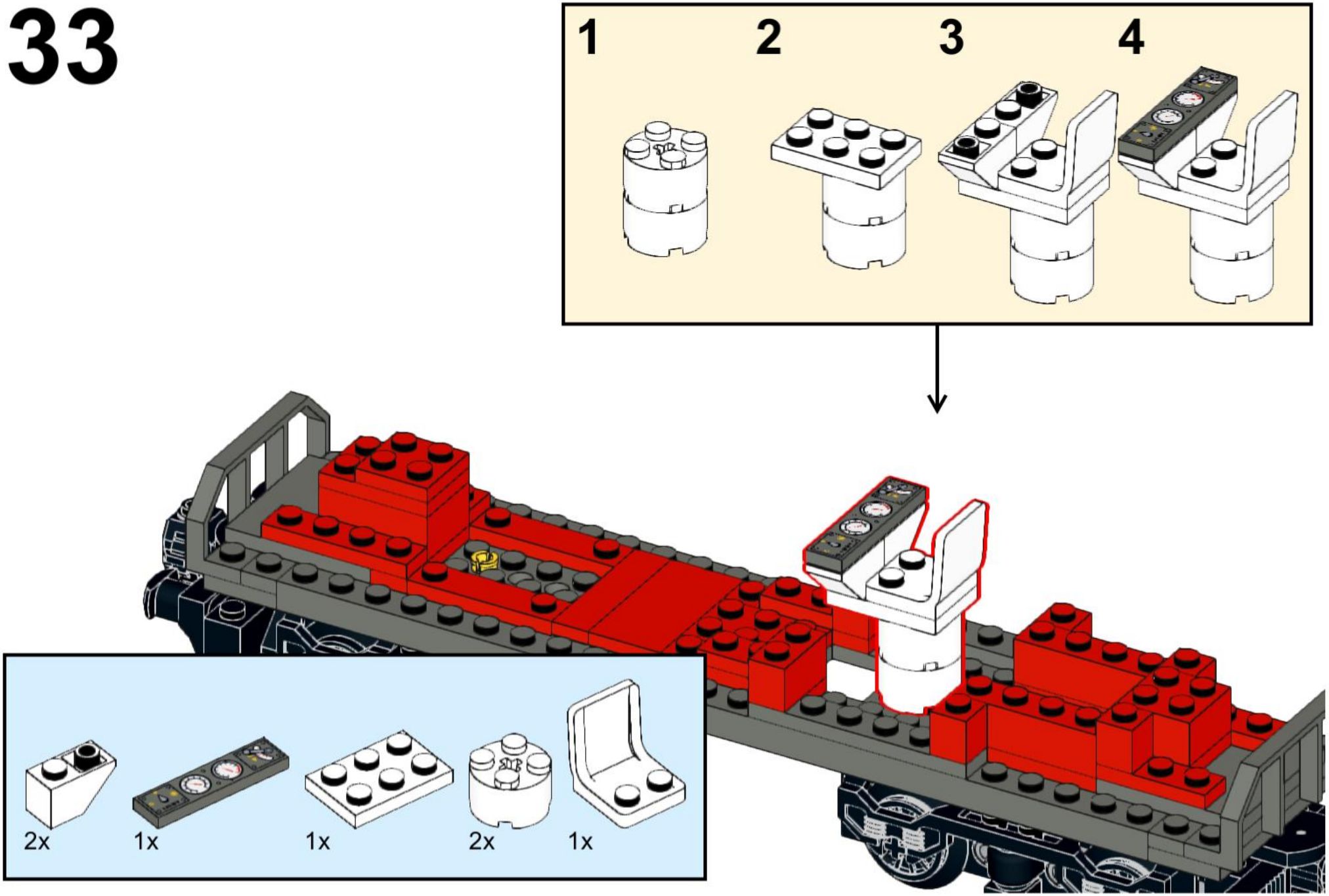

34

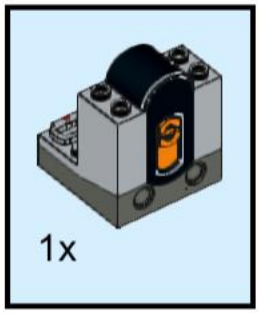

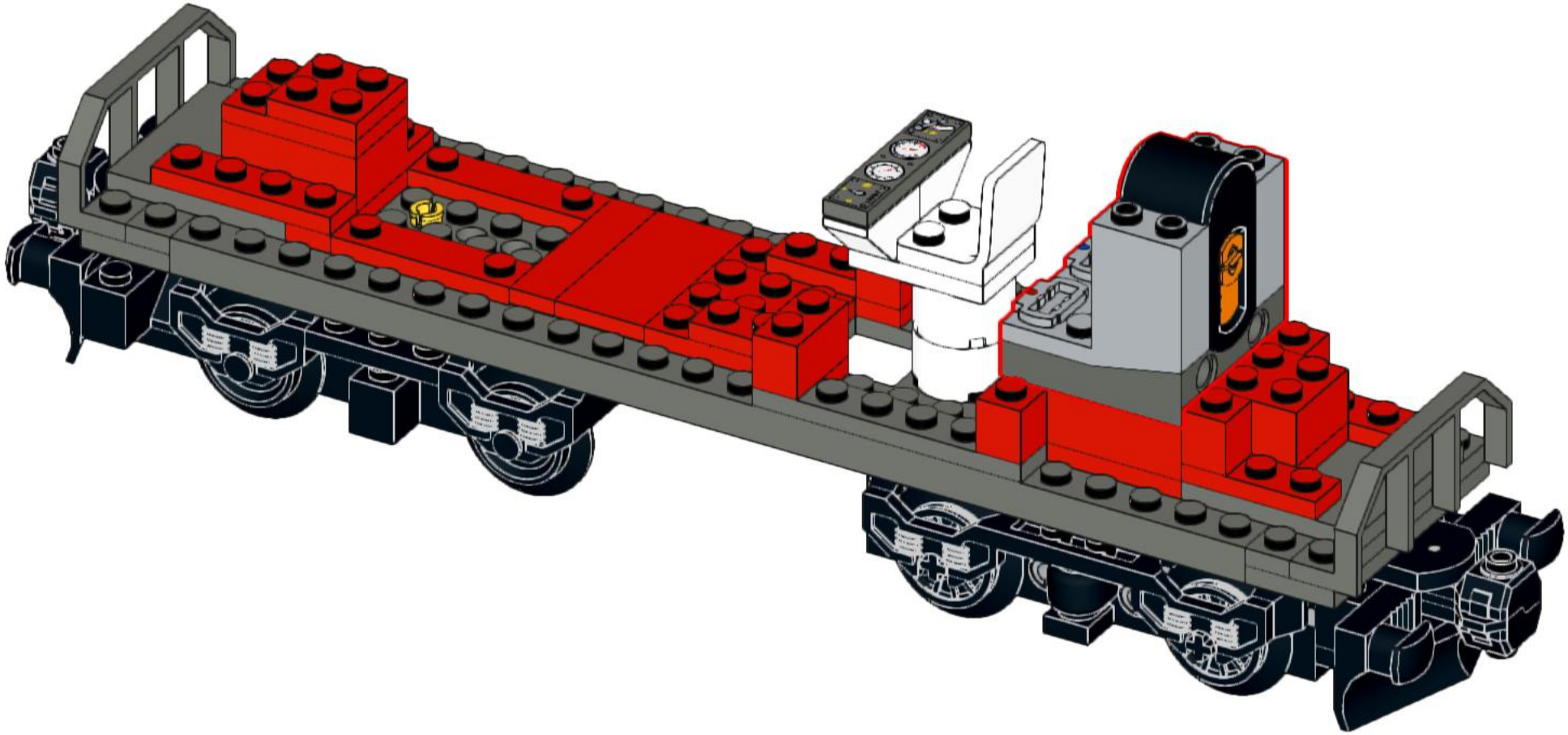

35

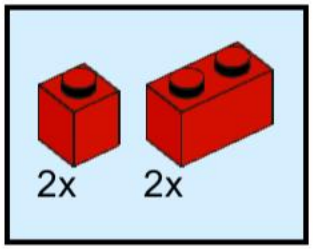

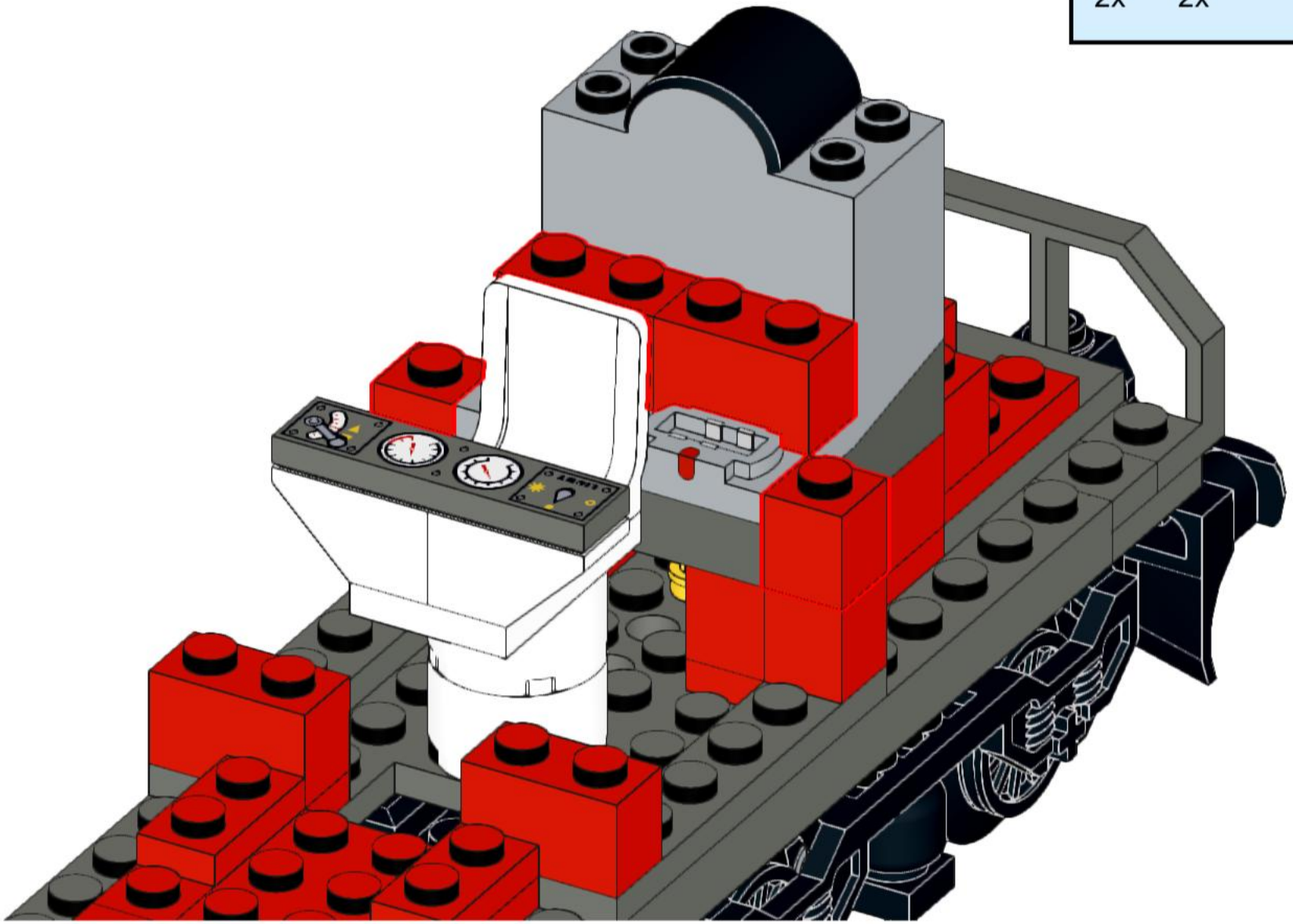

36

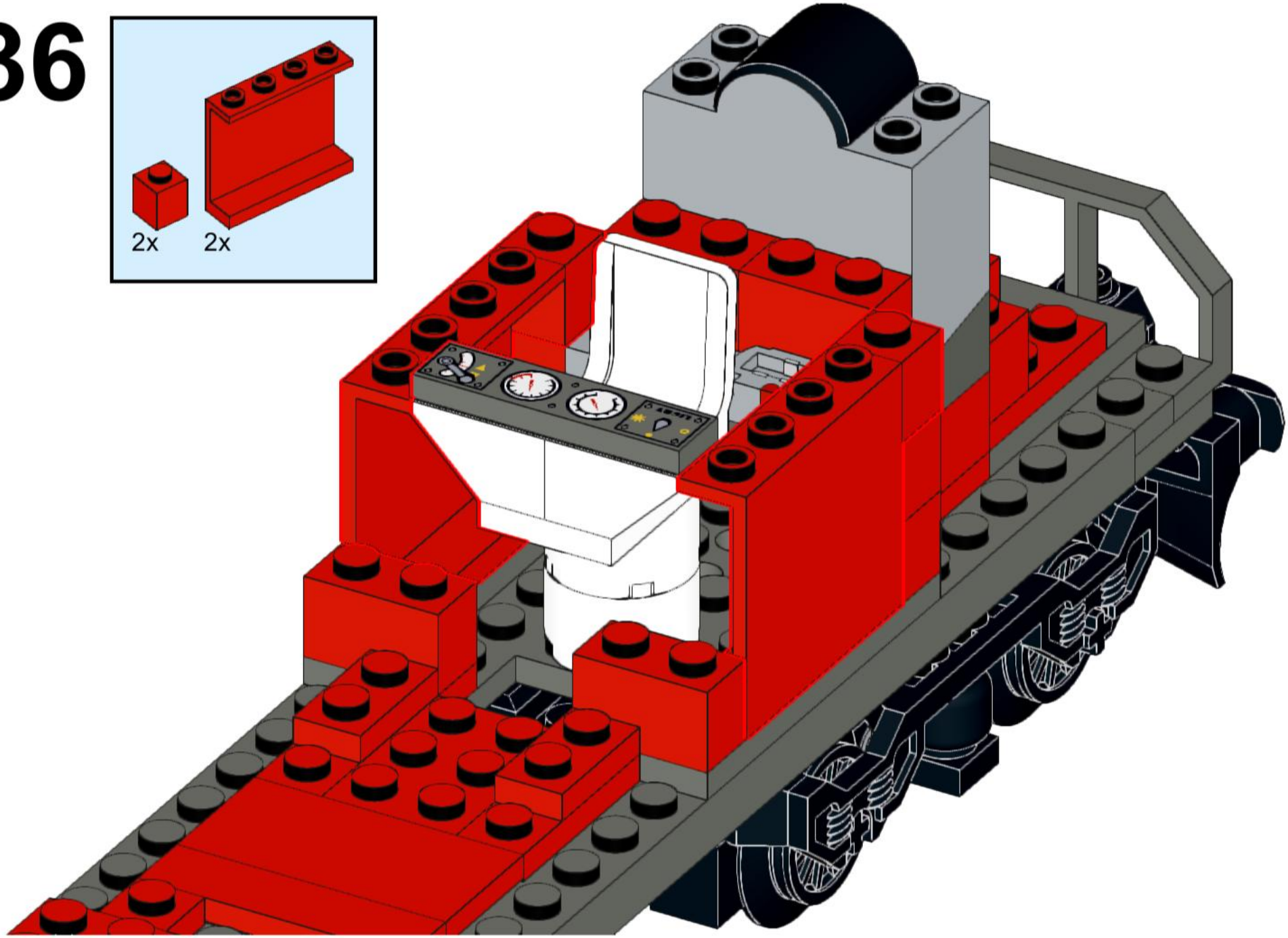

37

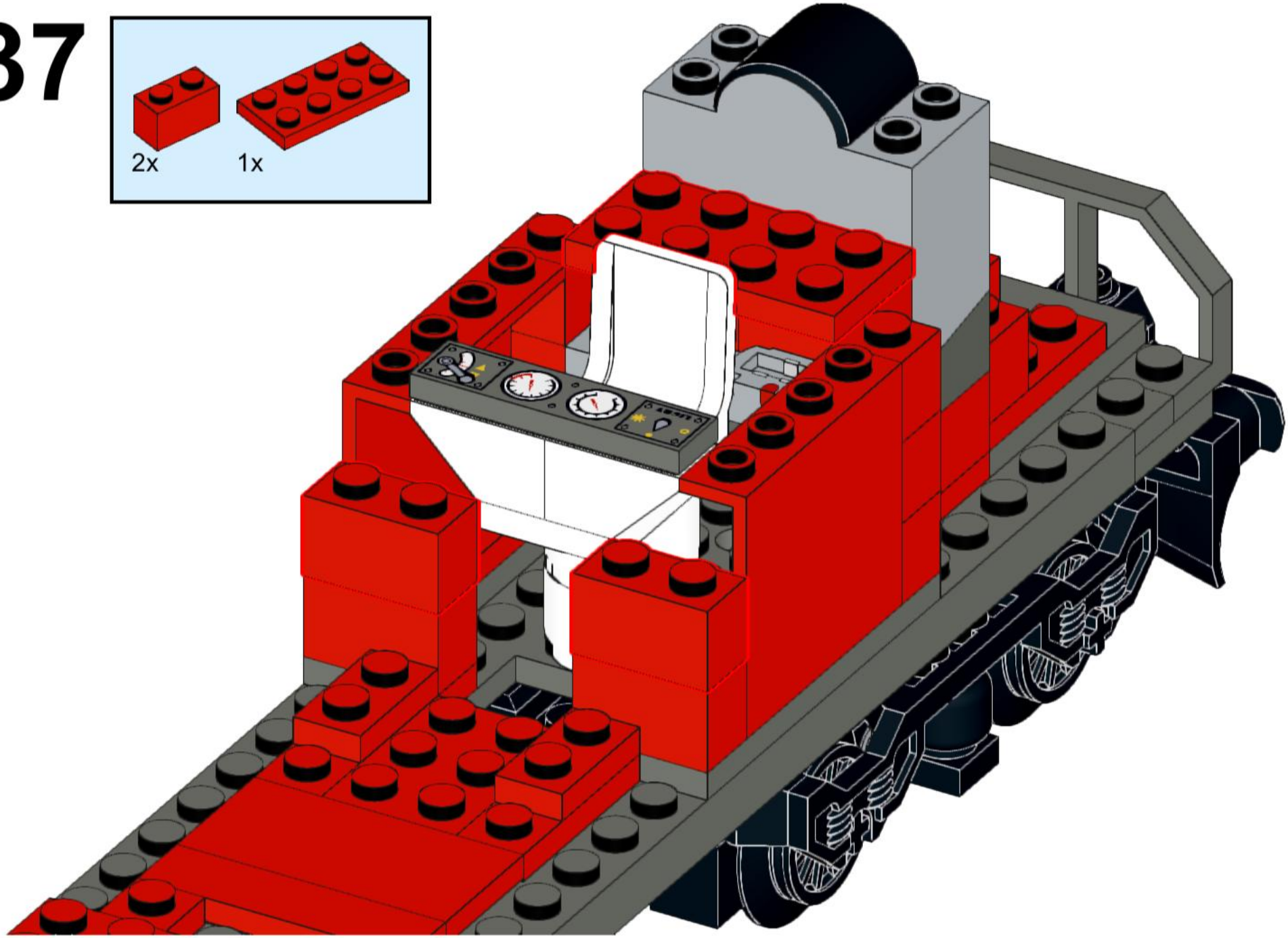

38

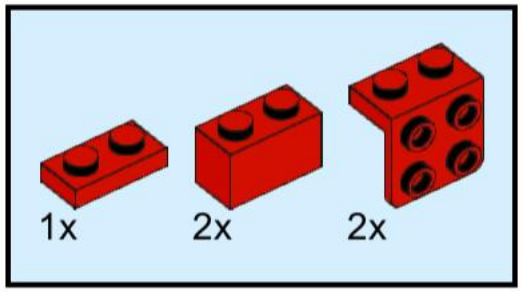

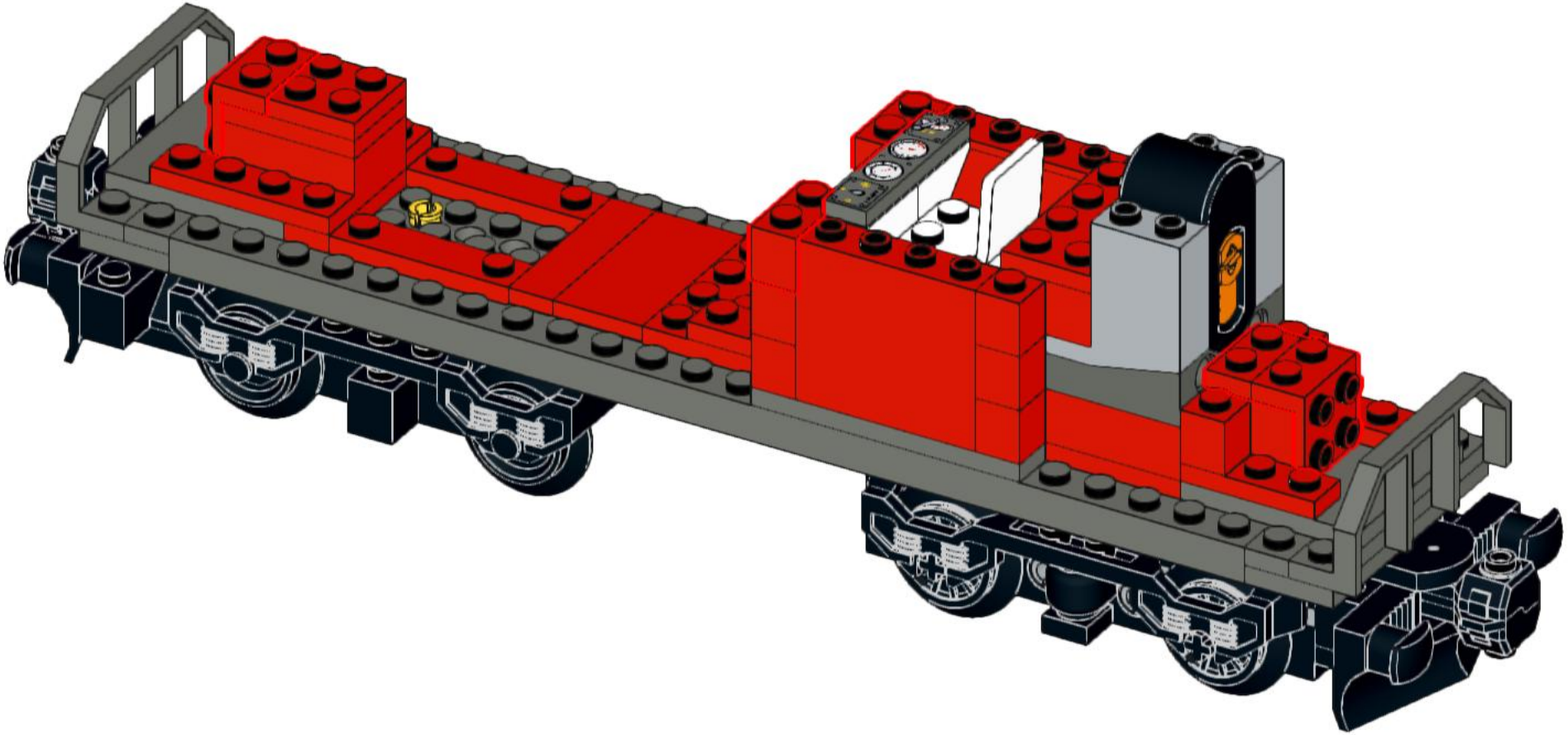

39

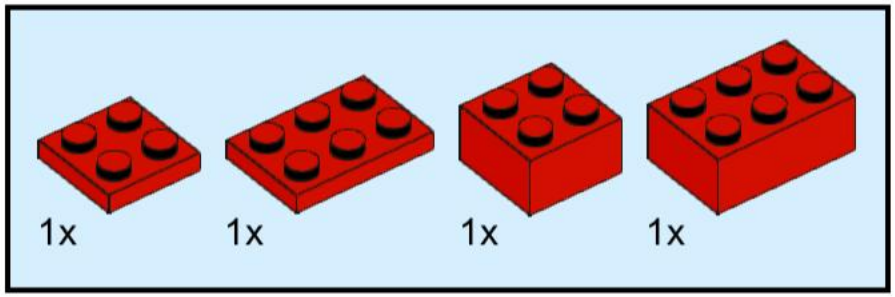

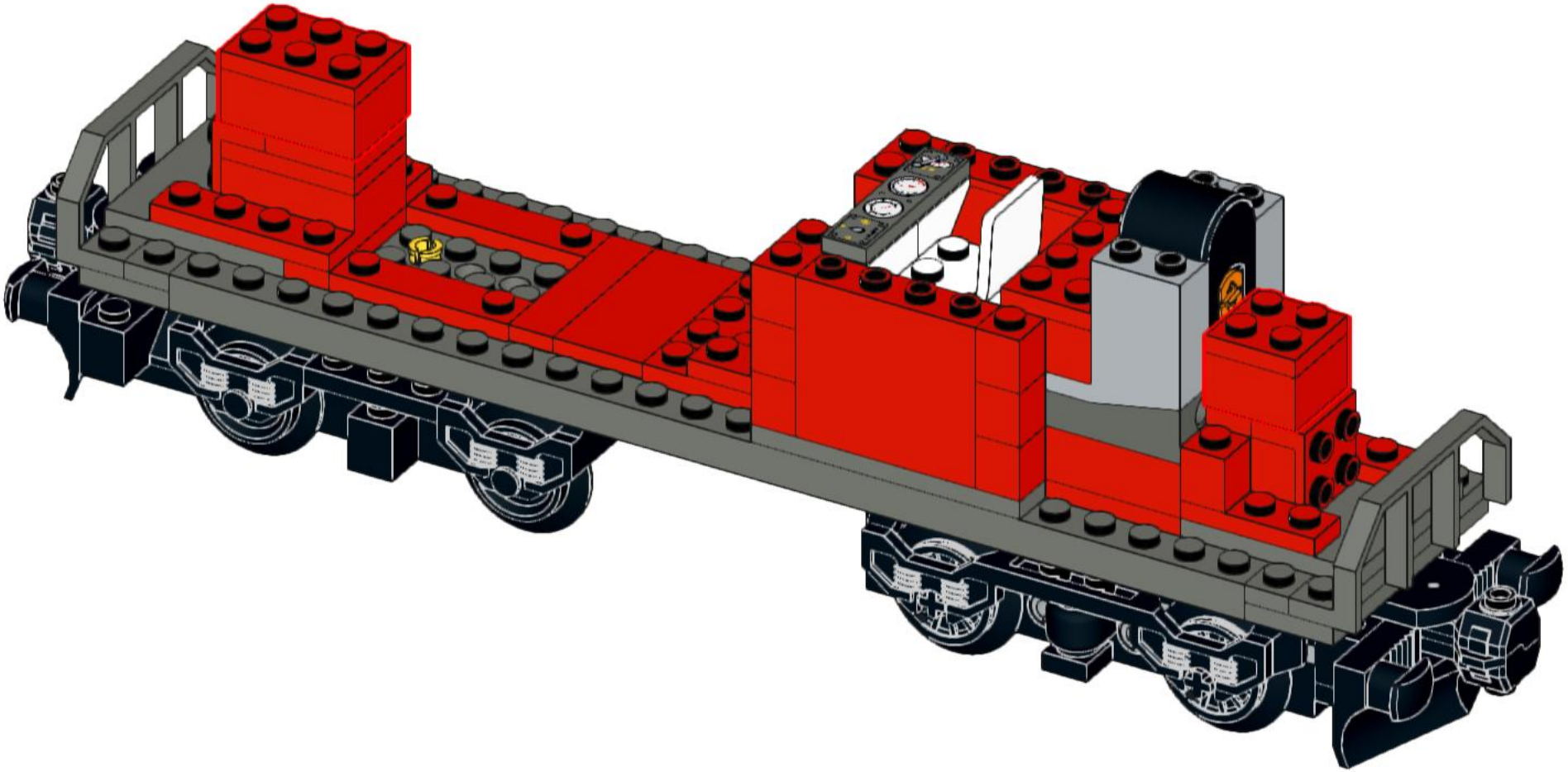

40

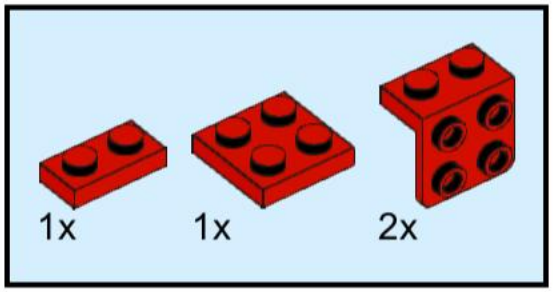

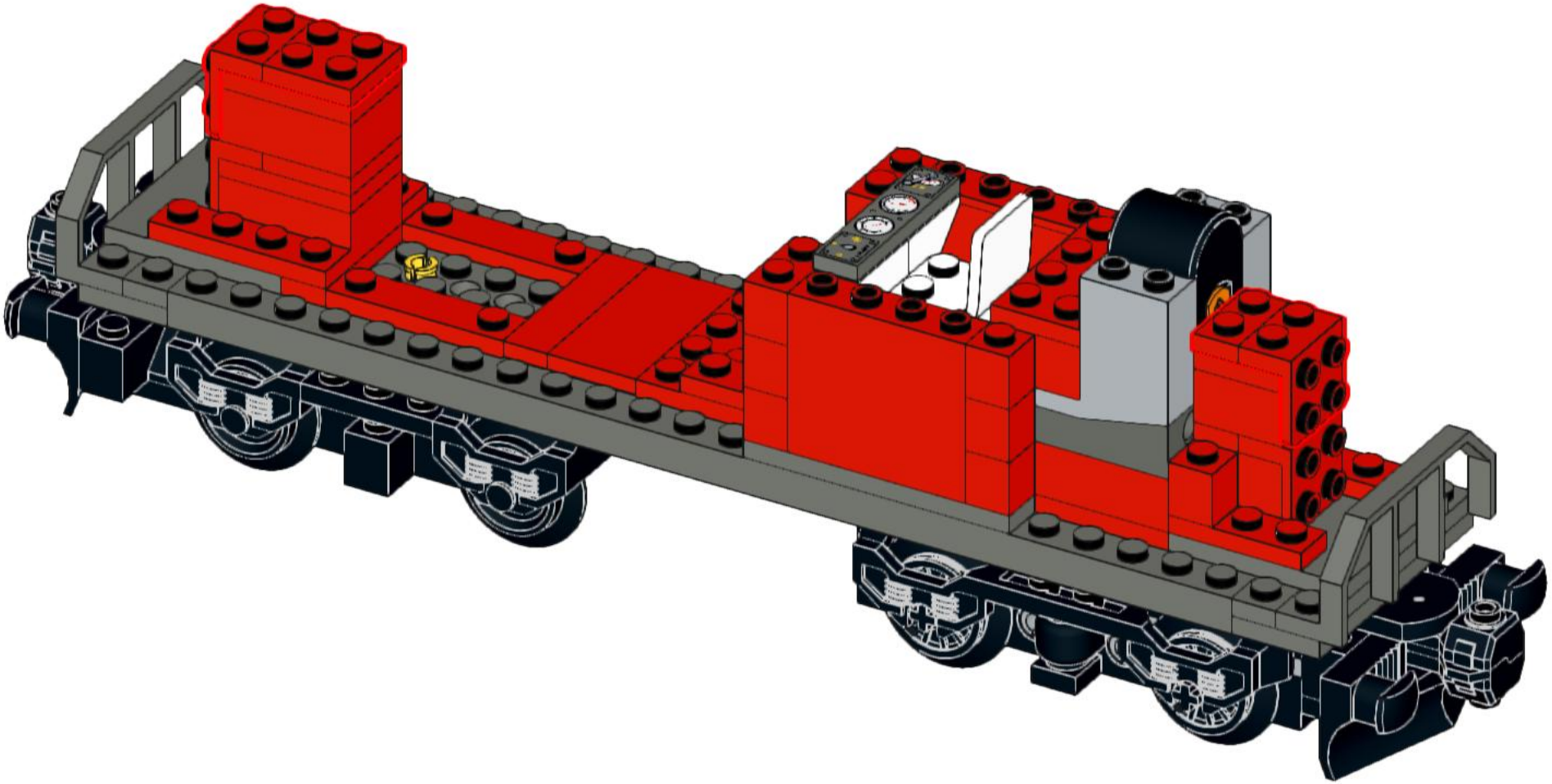

41

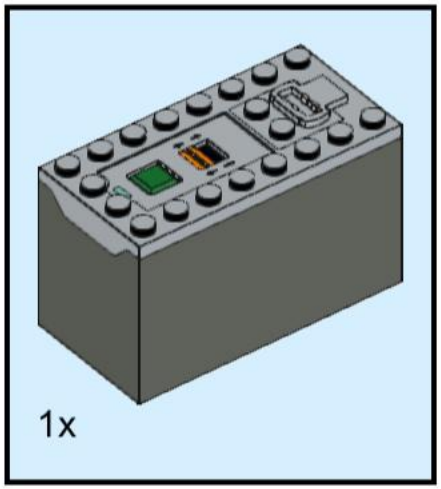

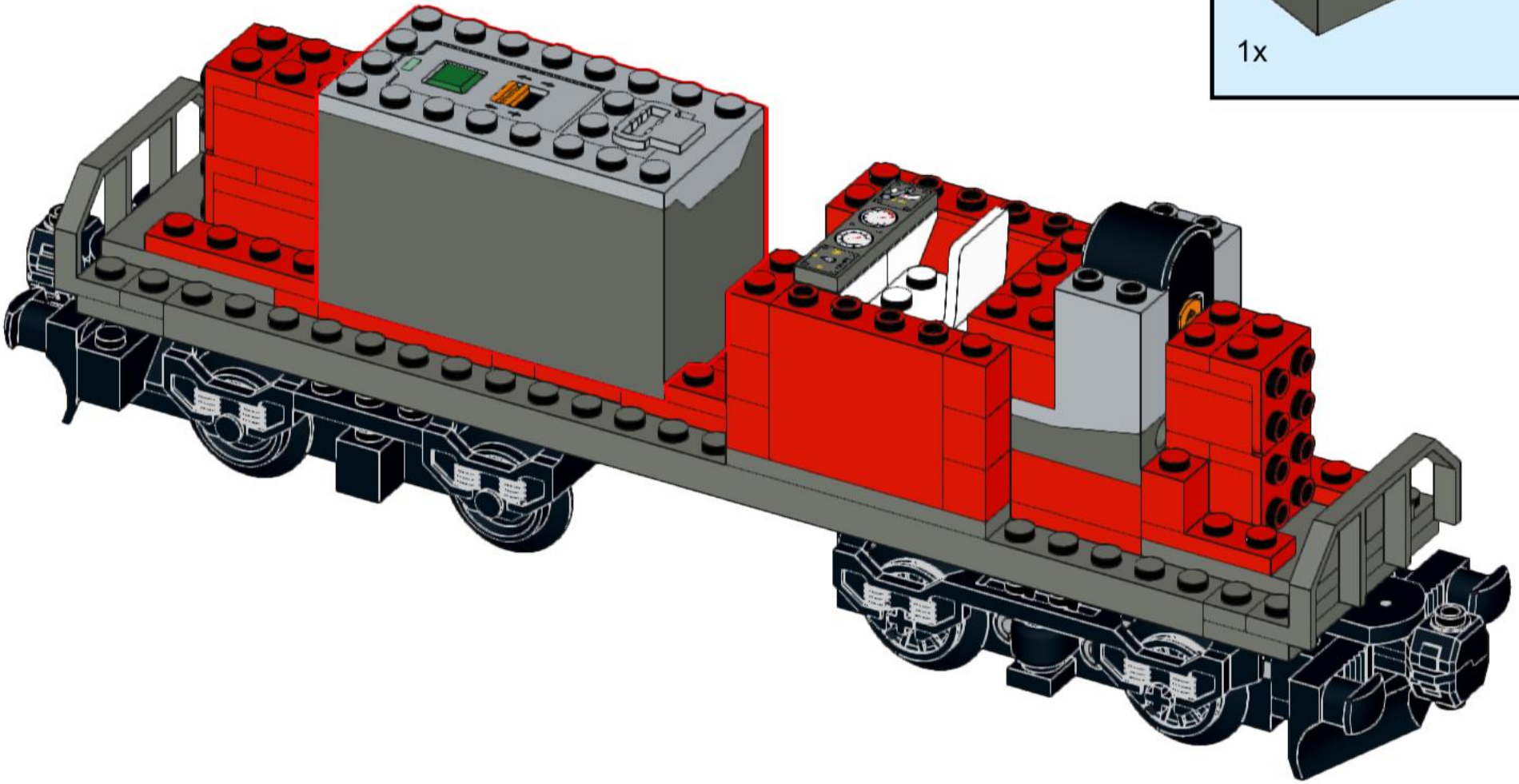

42

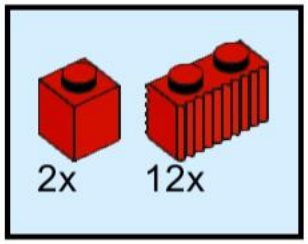

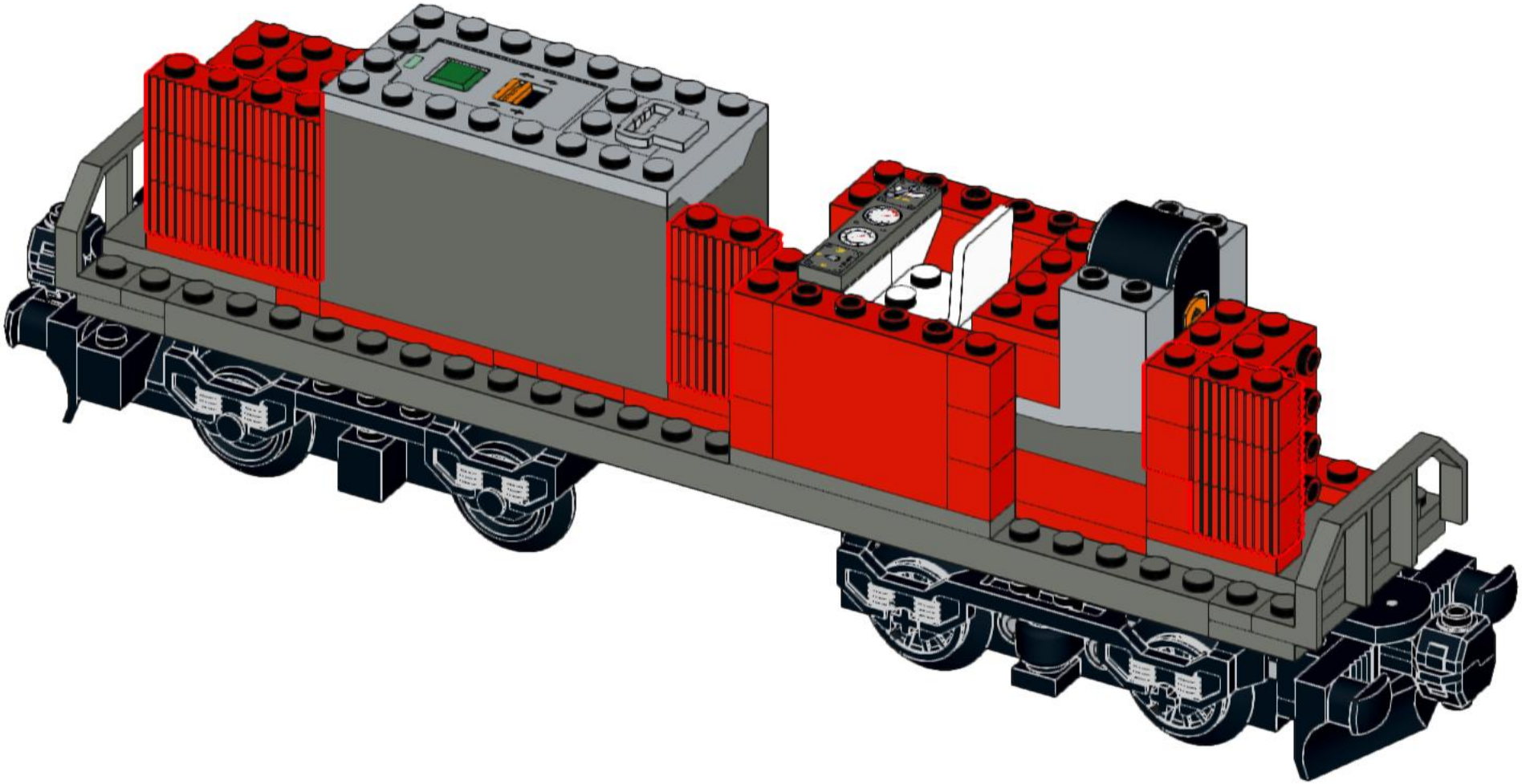

43

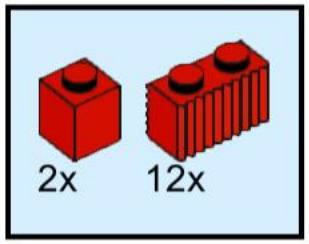

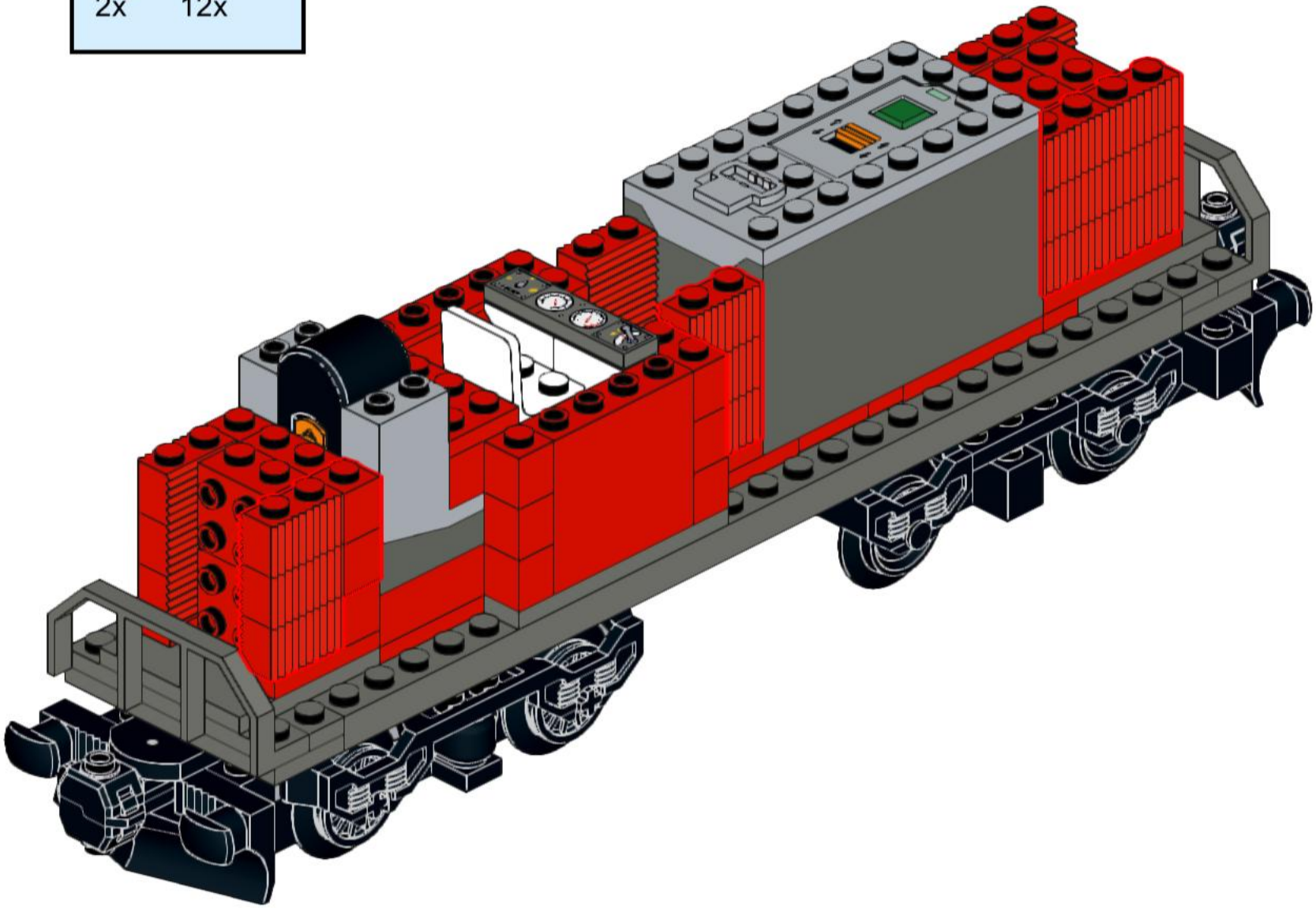

44

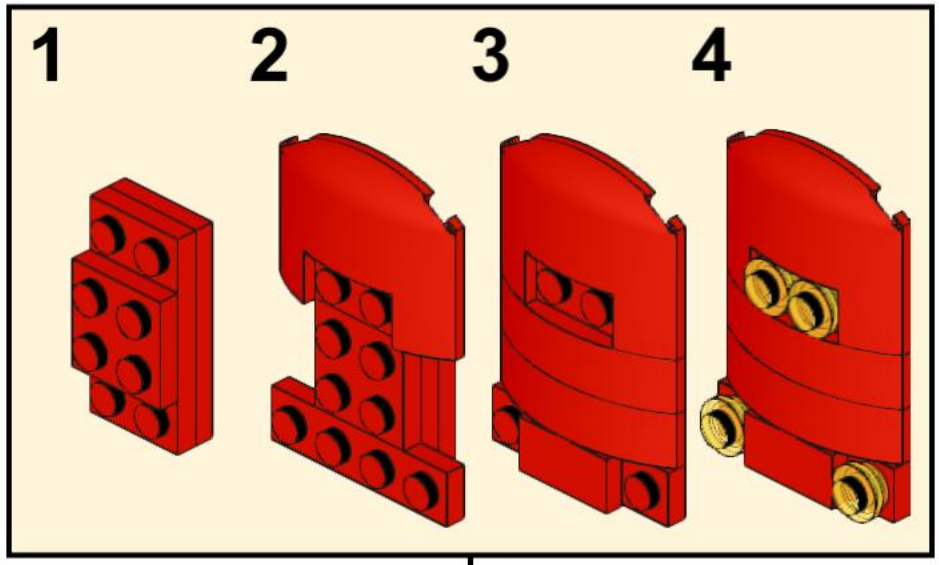

2x

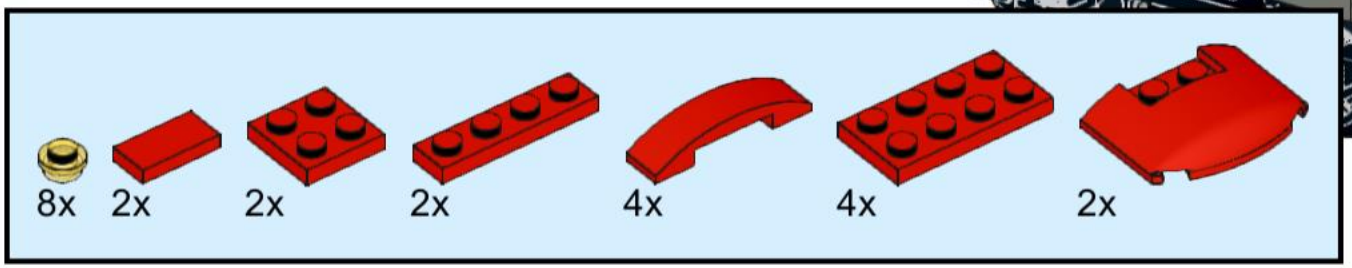

45

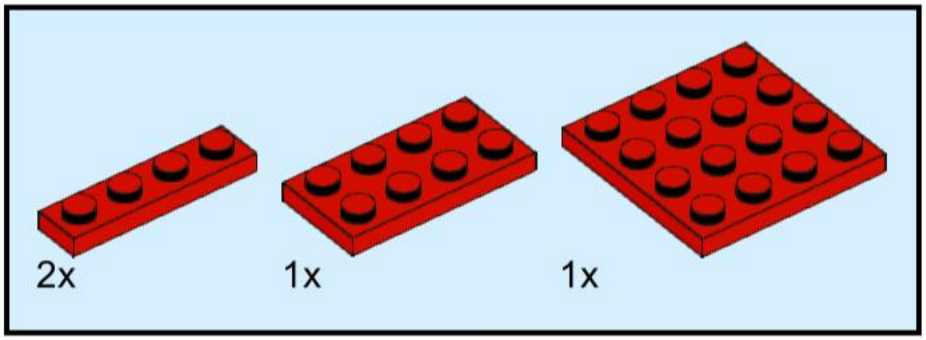

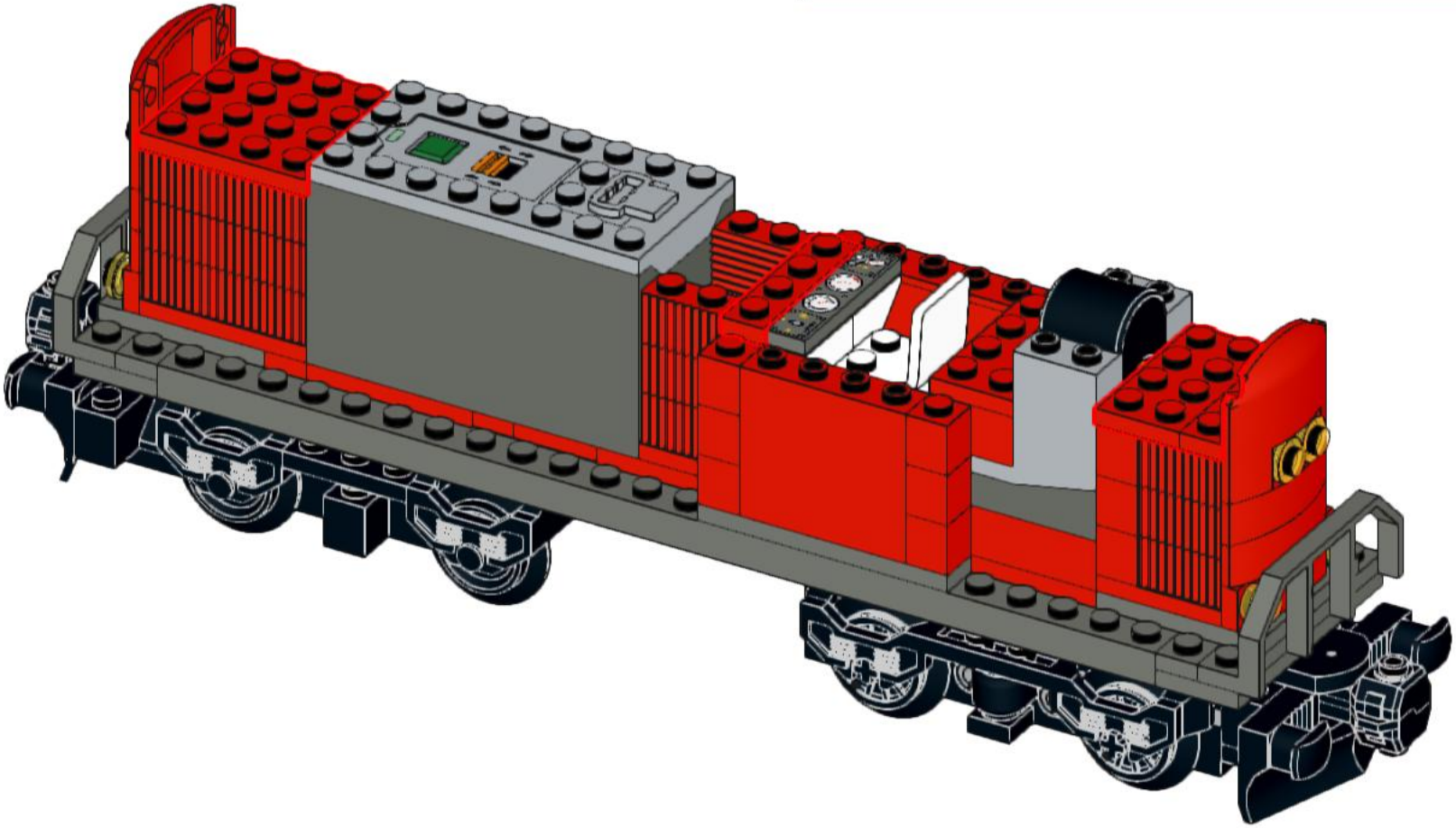

46

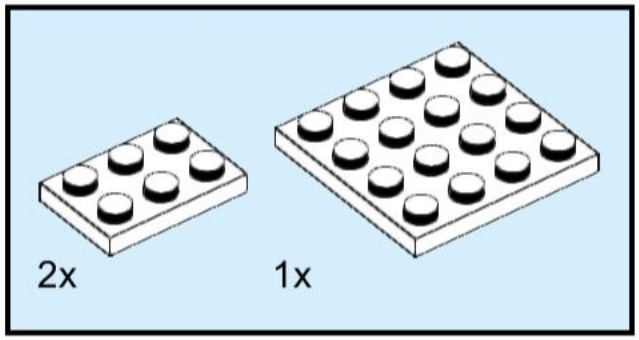

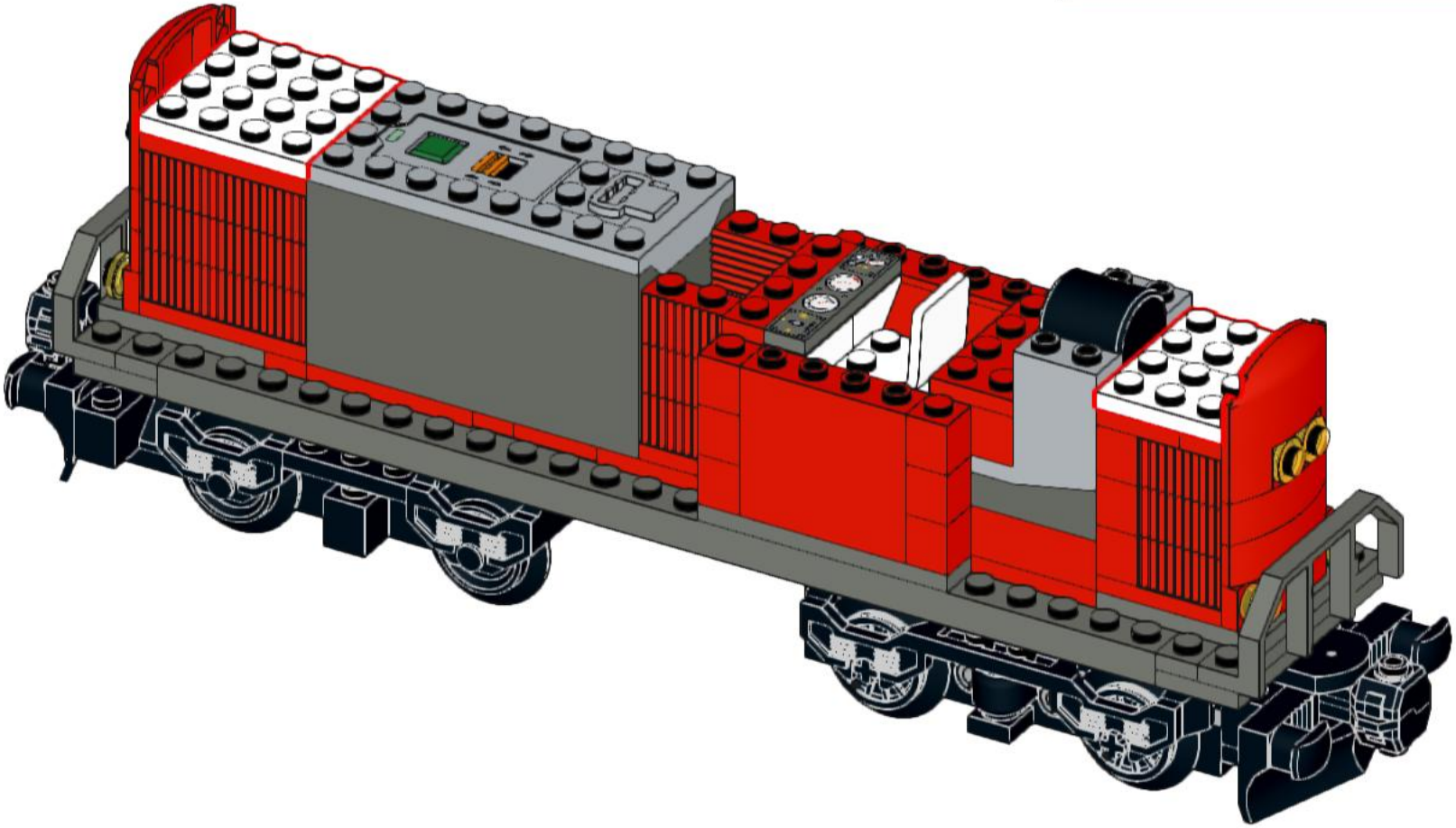

47

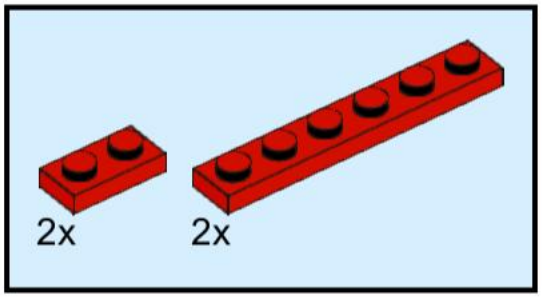

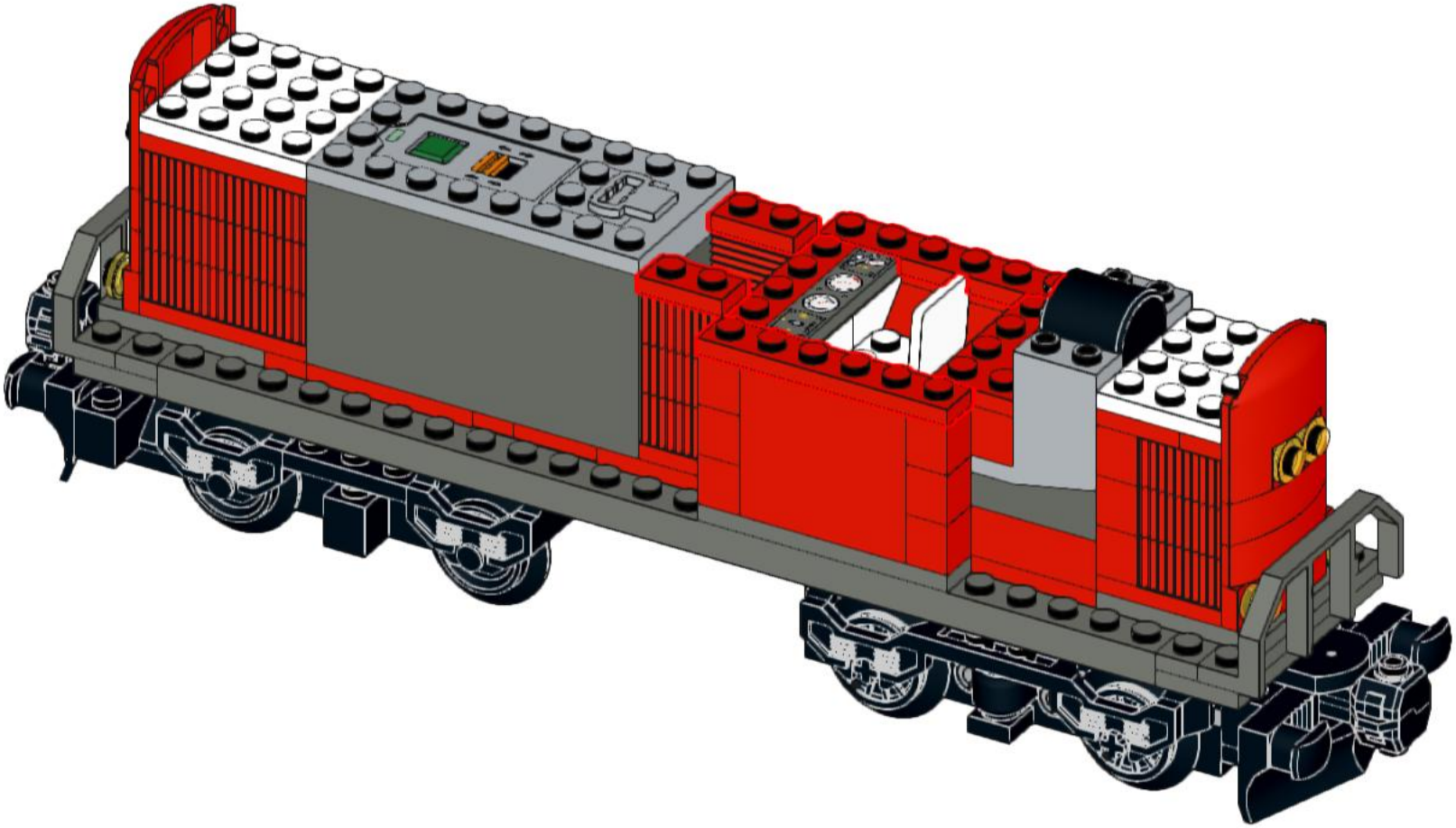

48

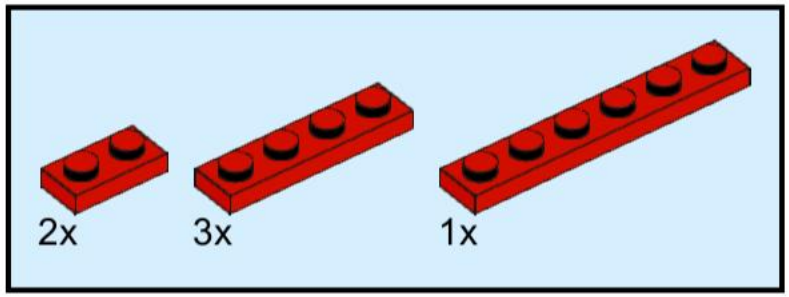

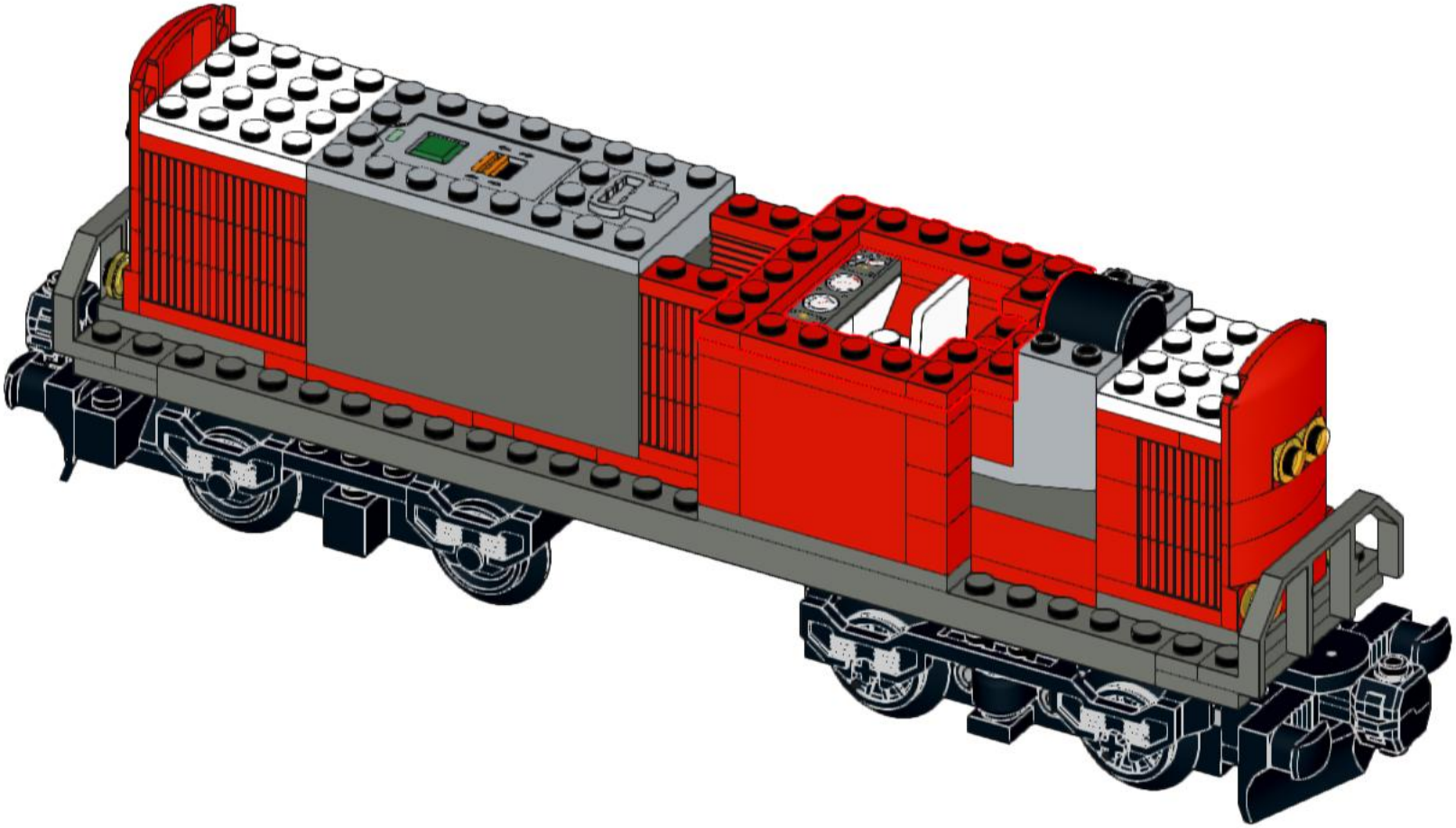

49

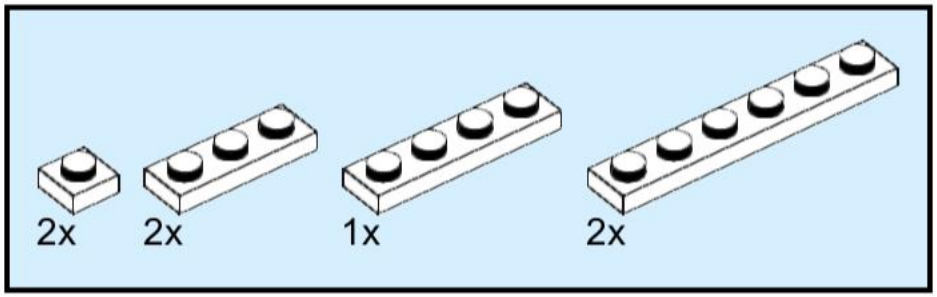

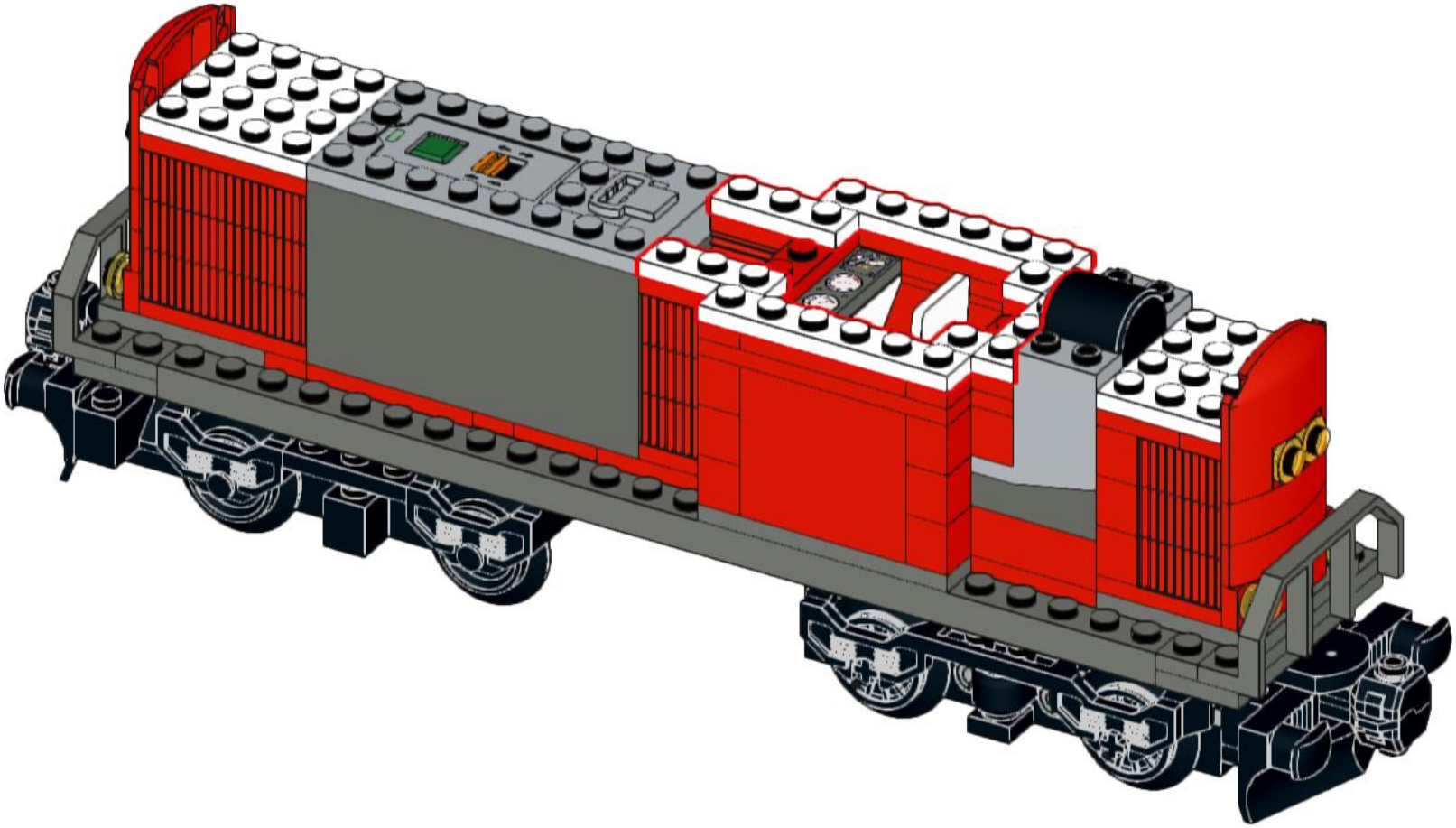

50

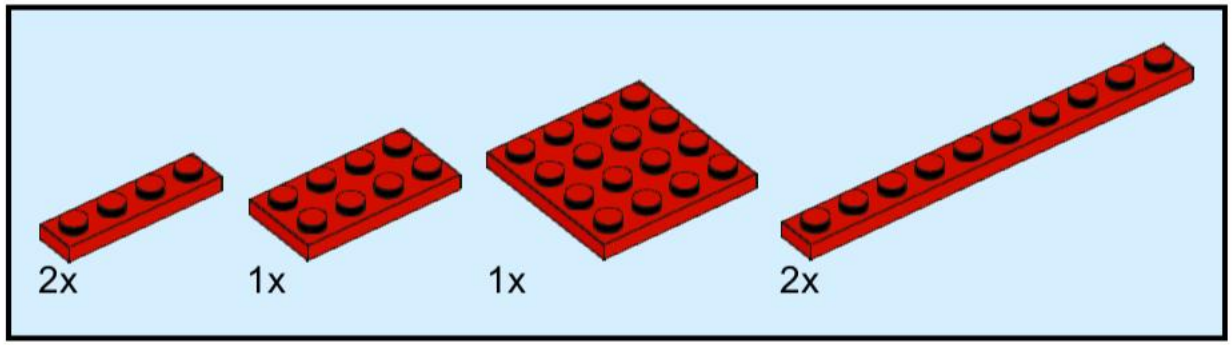

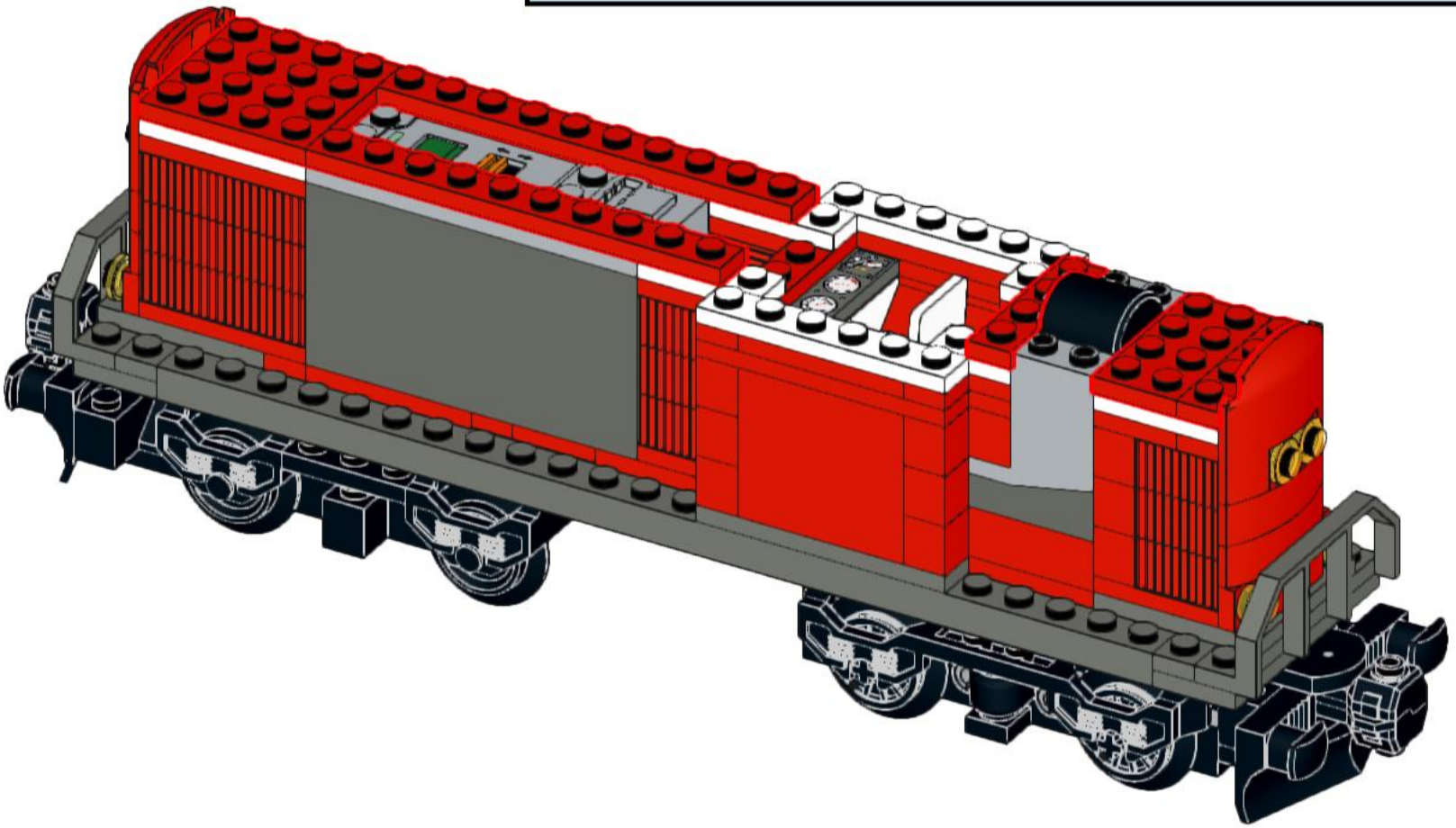

51

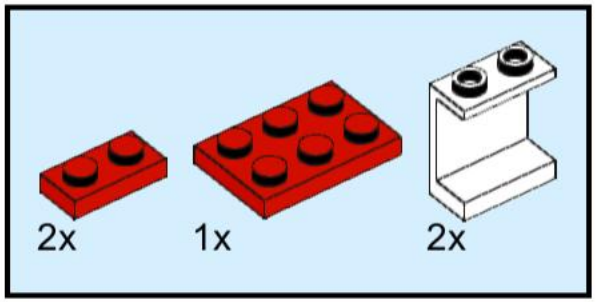

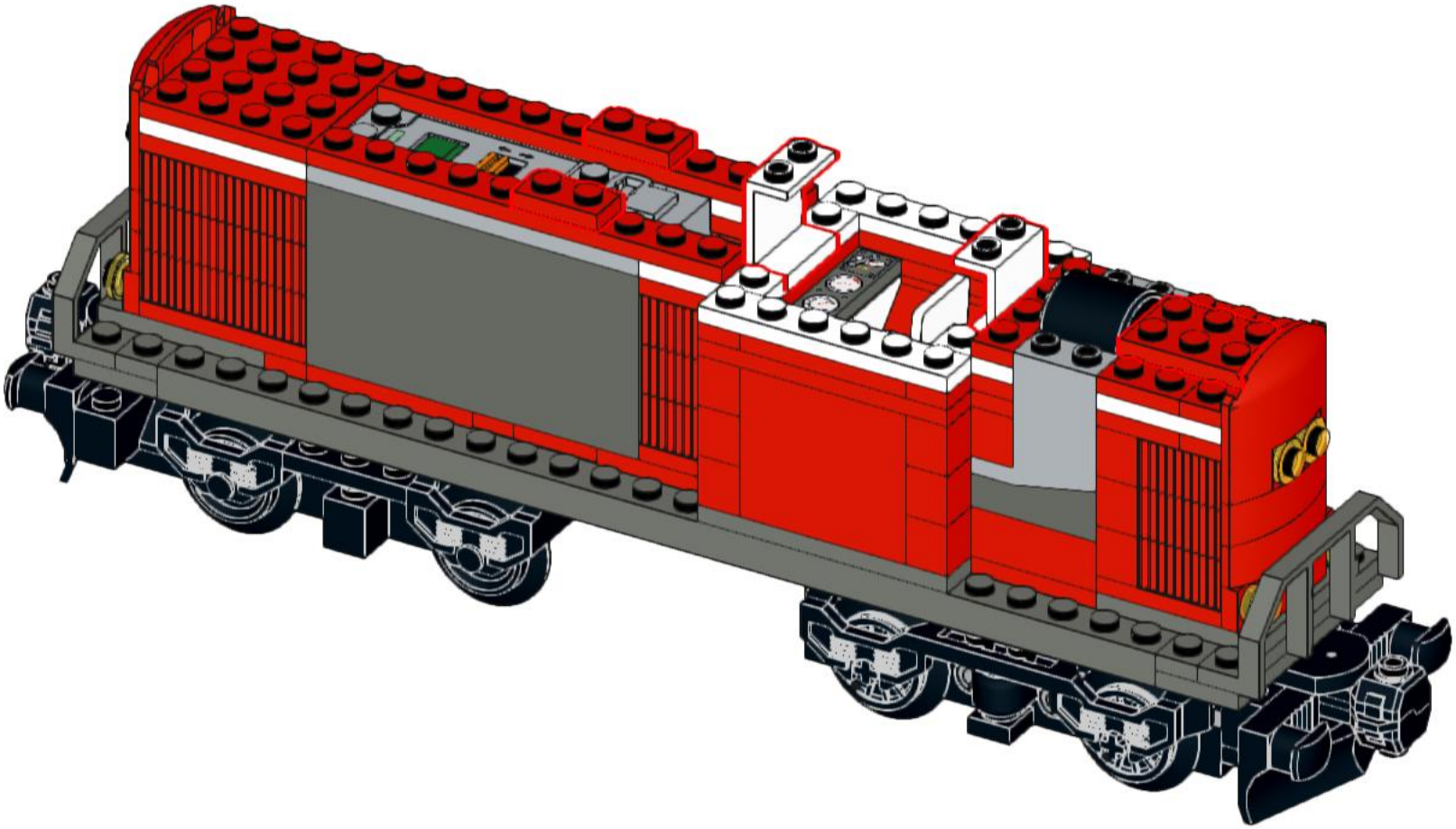

52

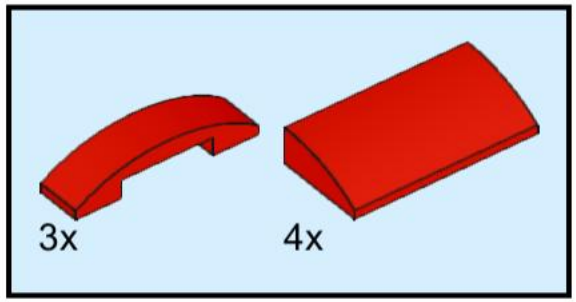

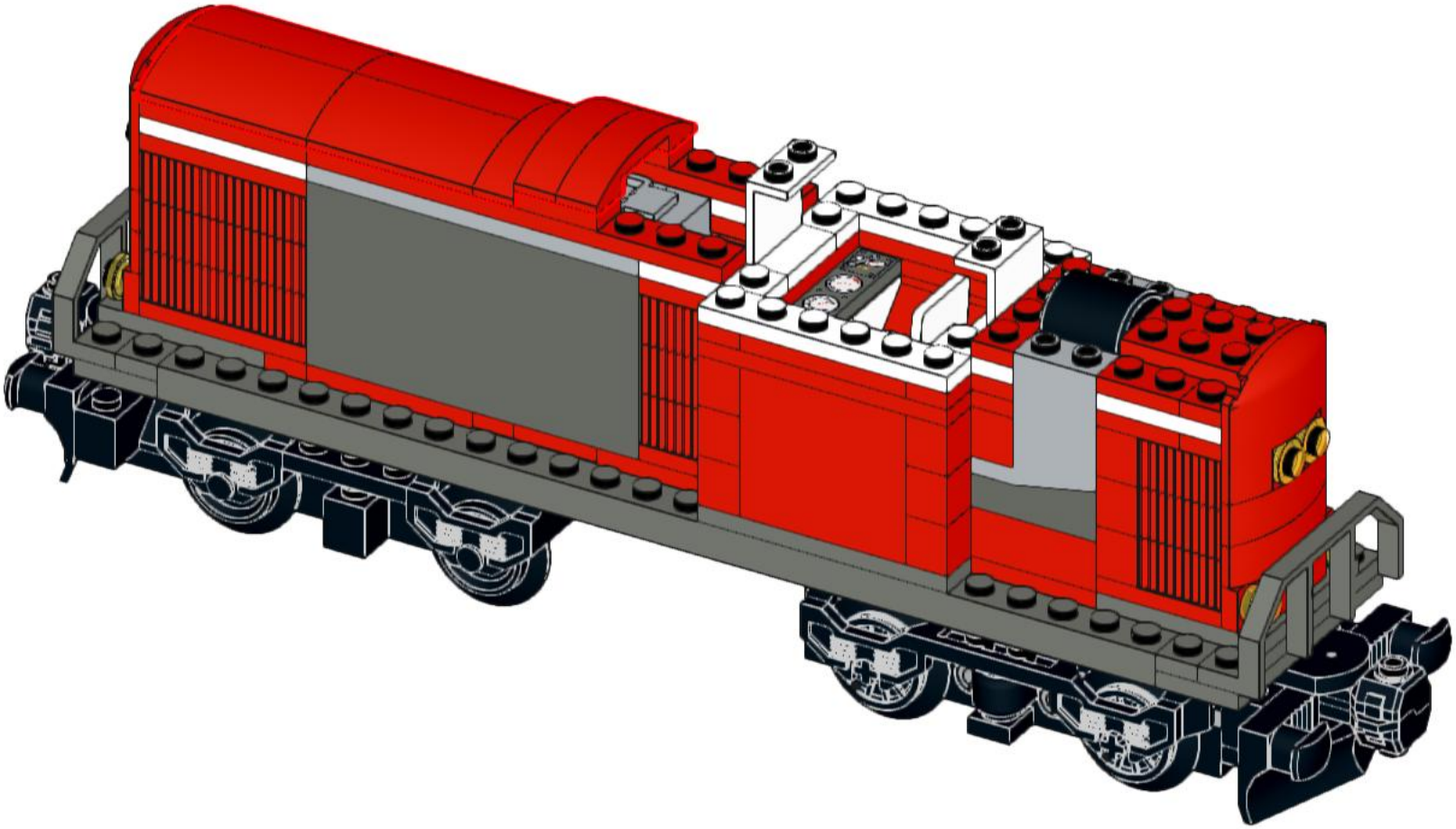

53

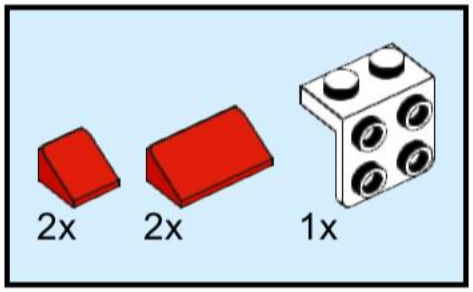

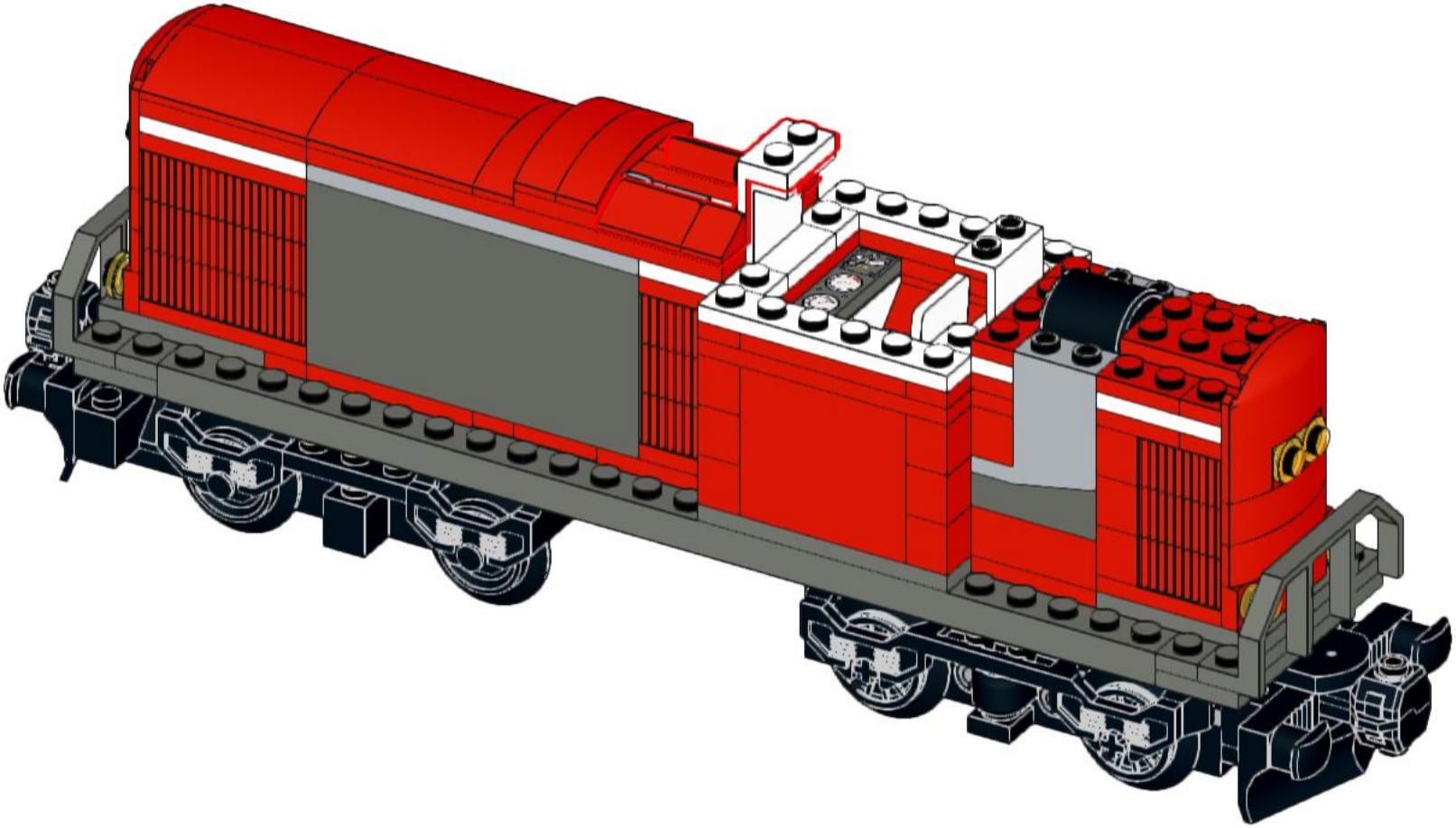

54

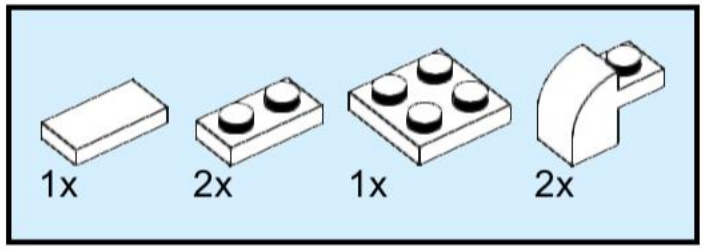

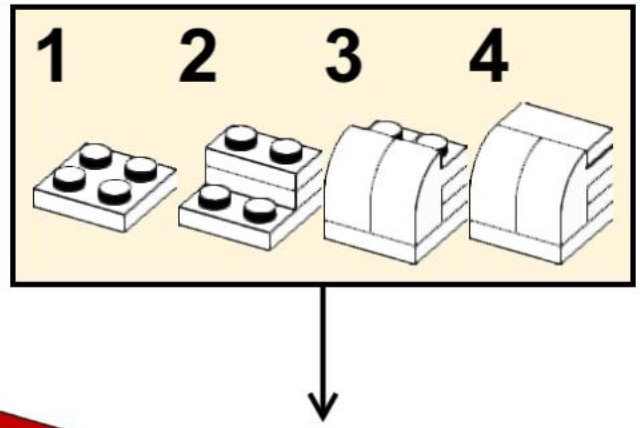

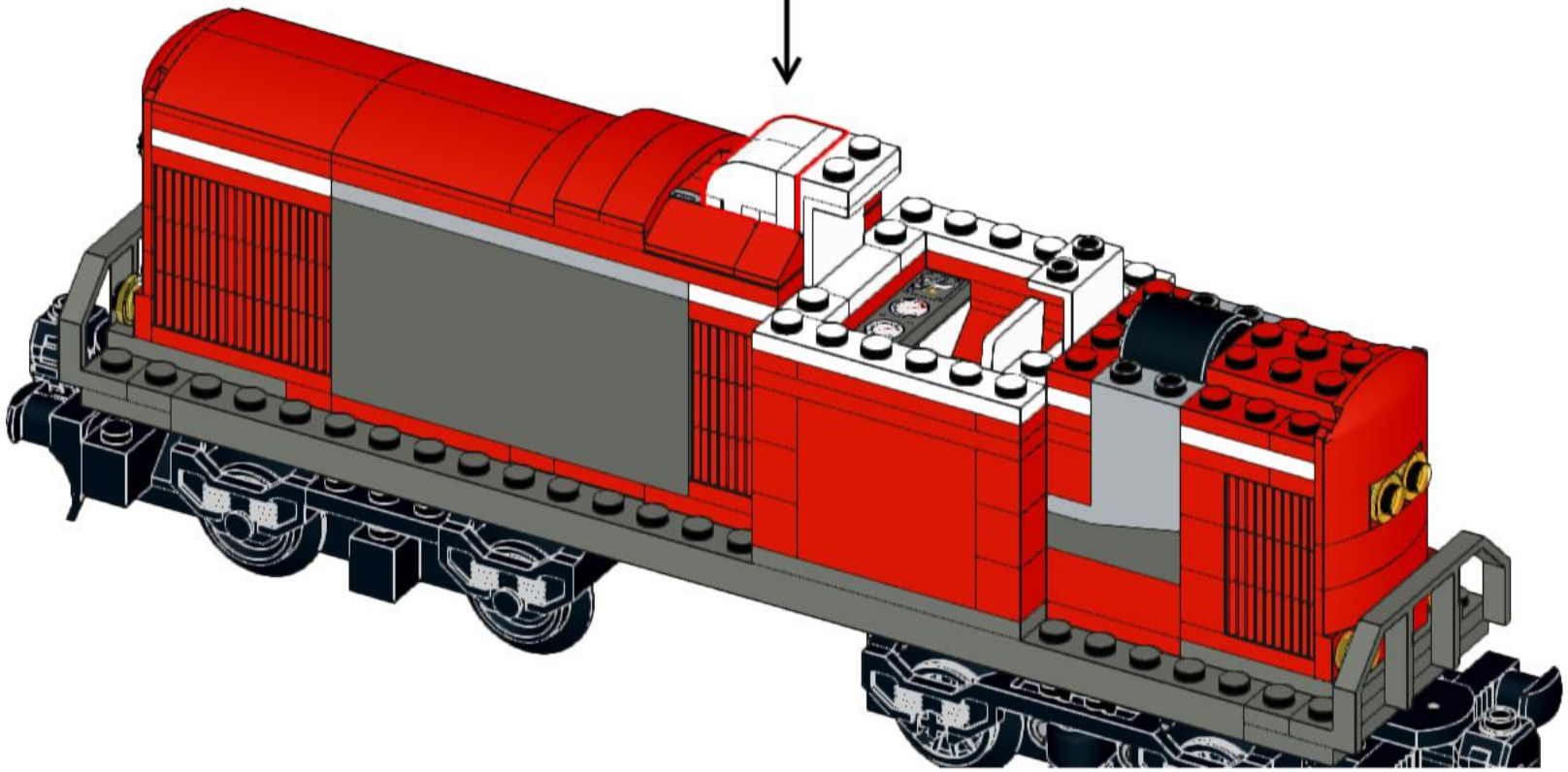

55

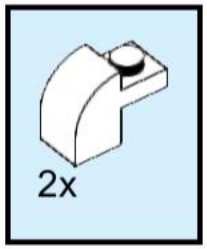

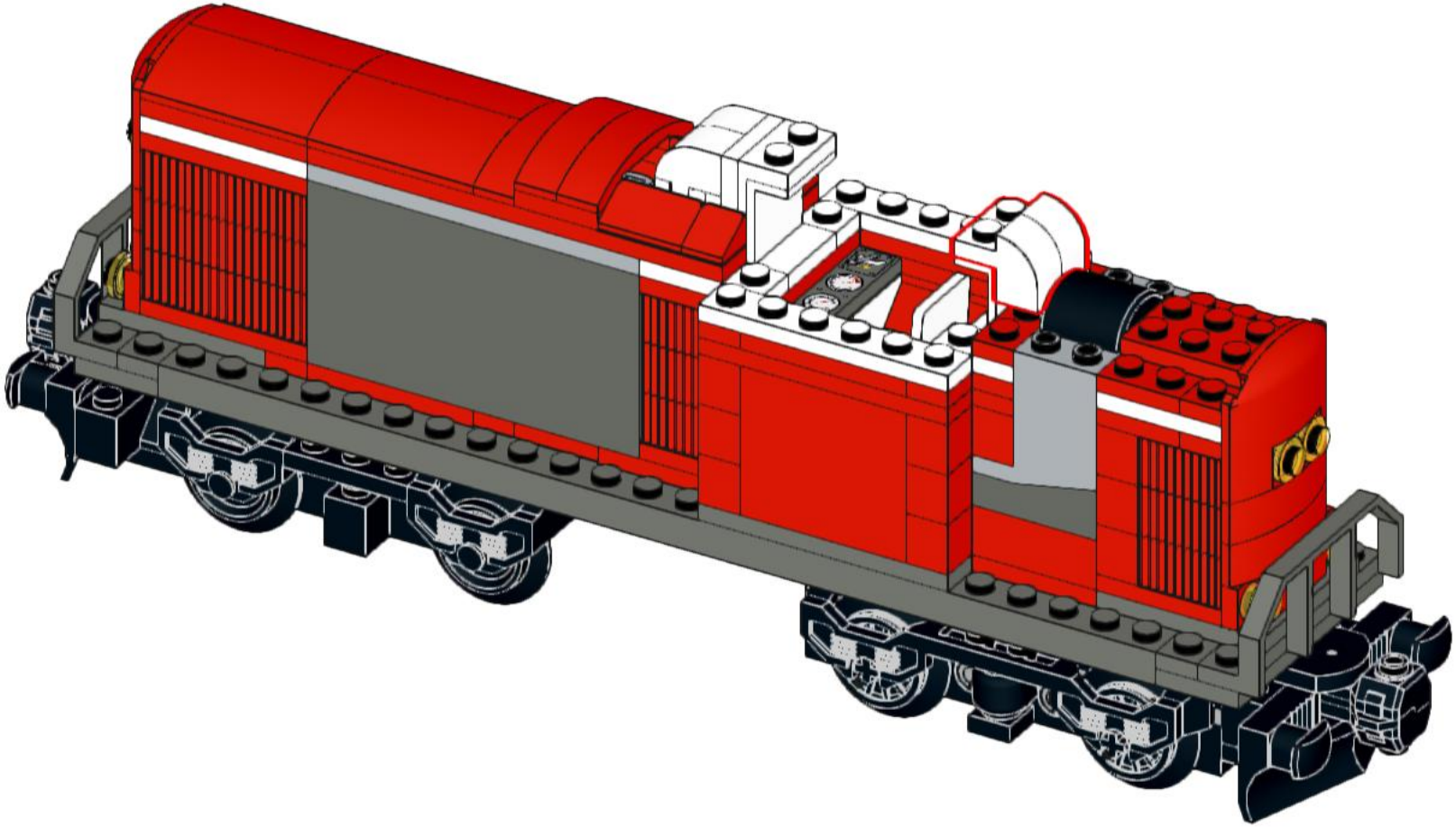

56

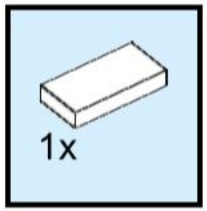

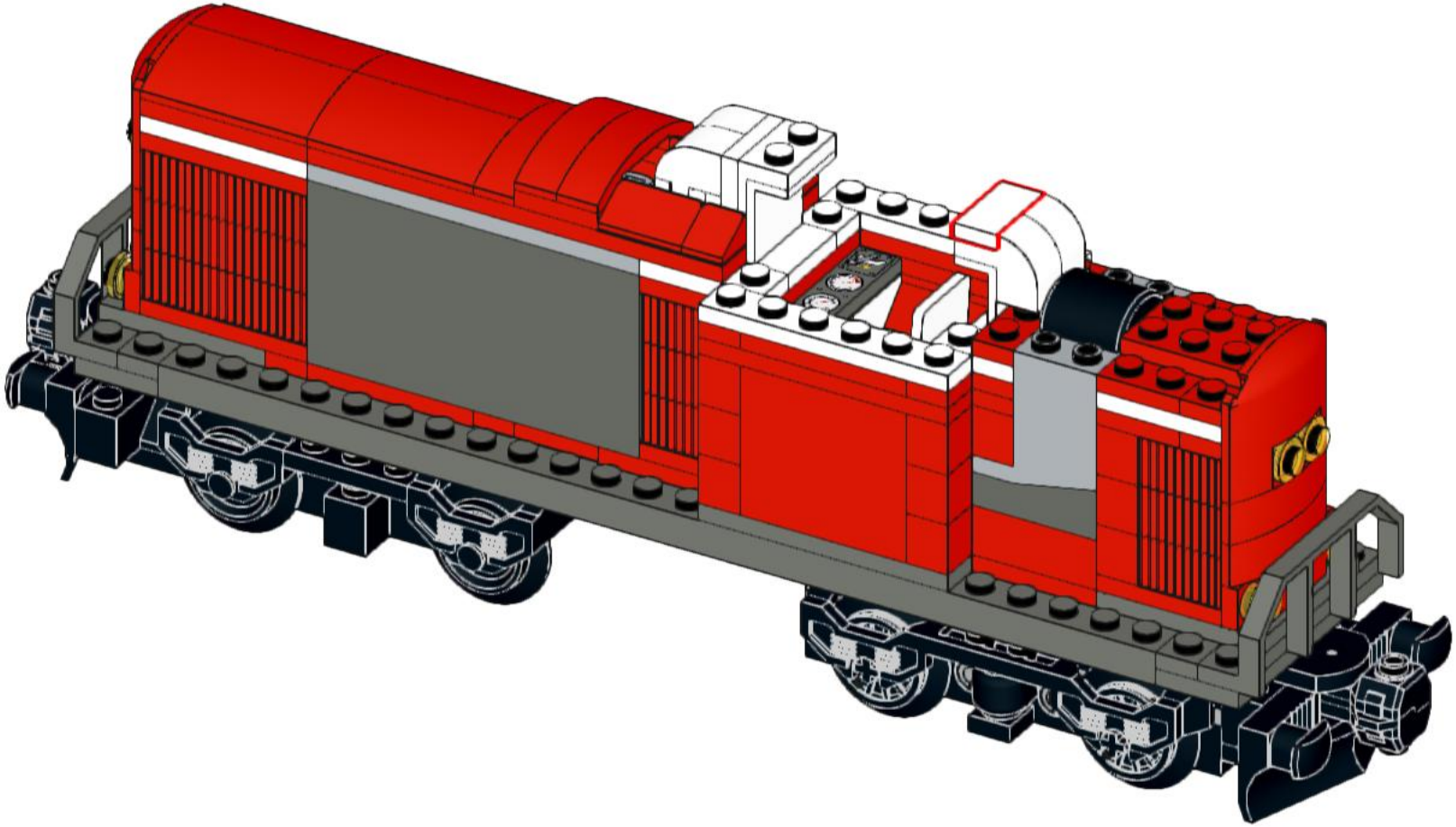

57

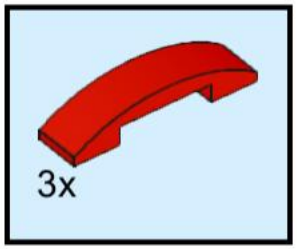

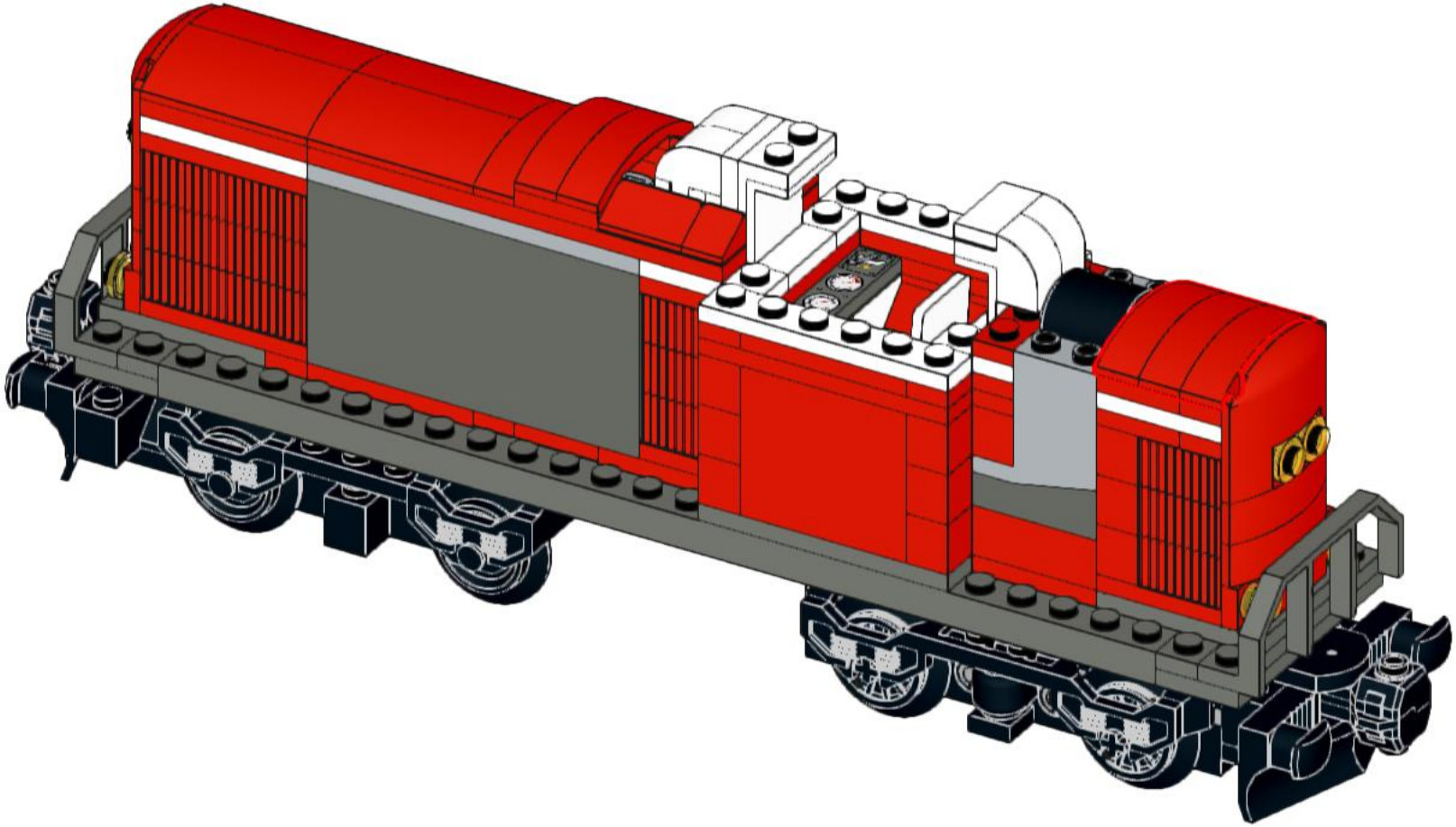

58

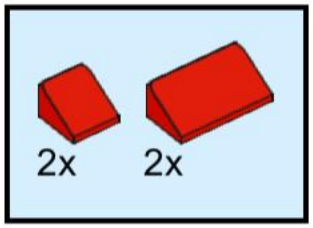

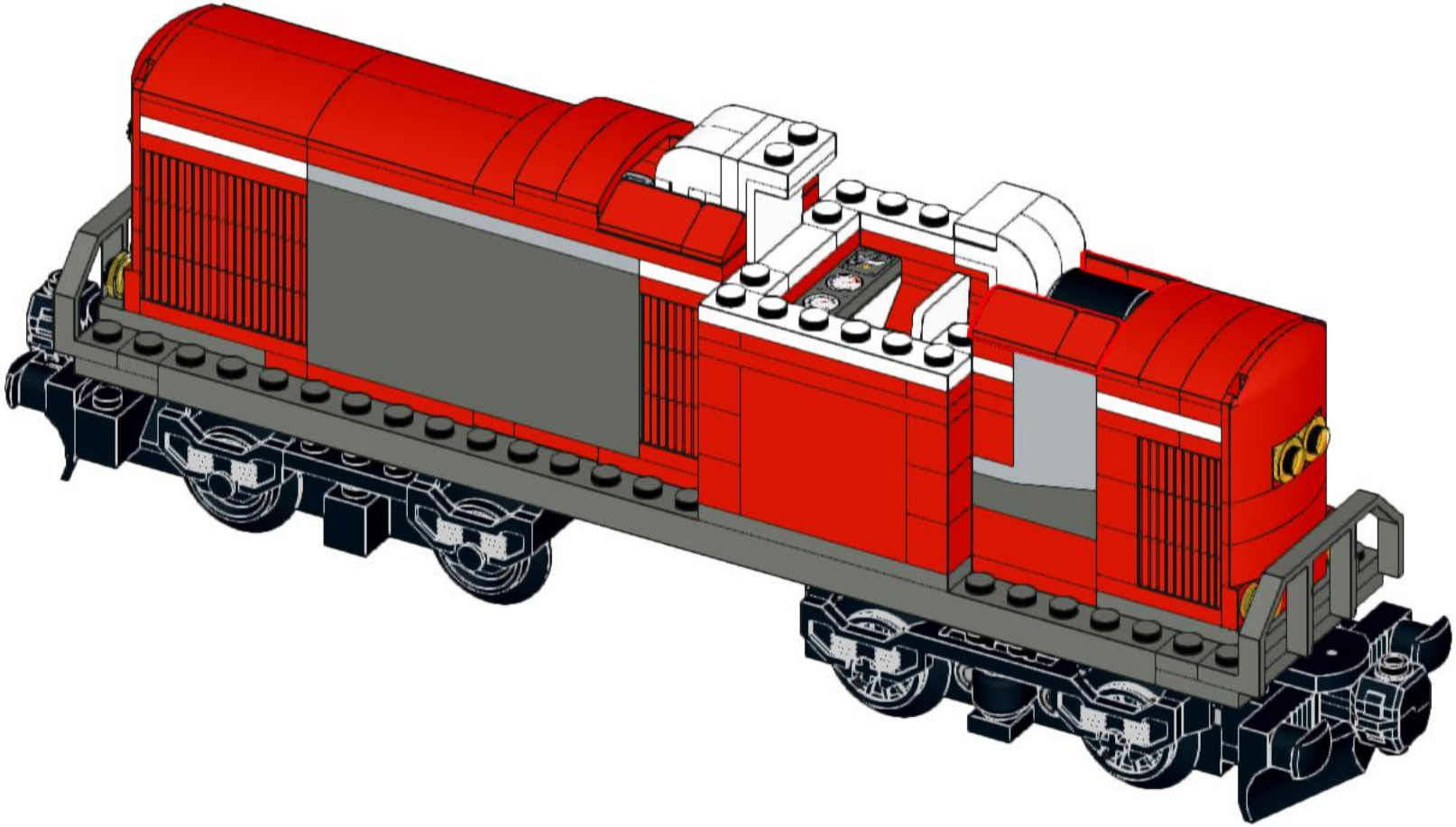

59

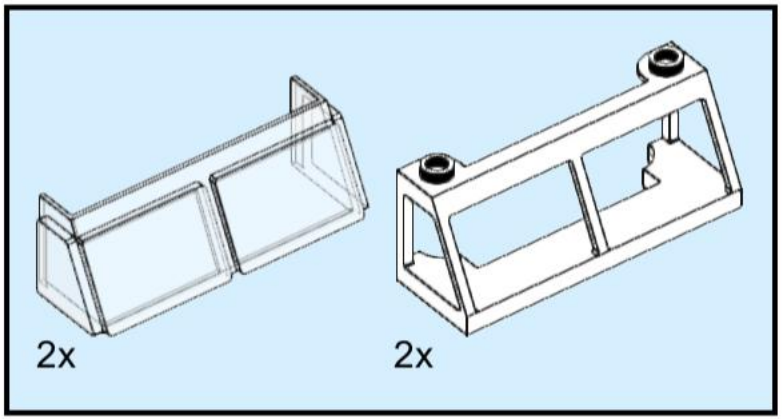

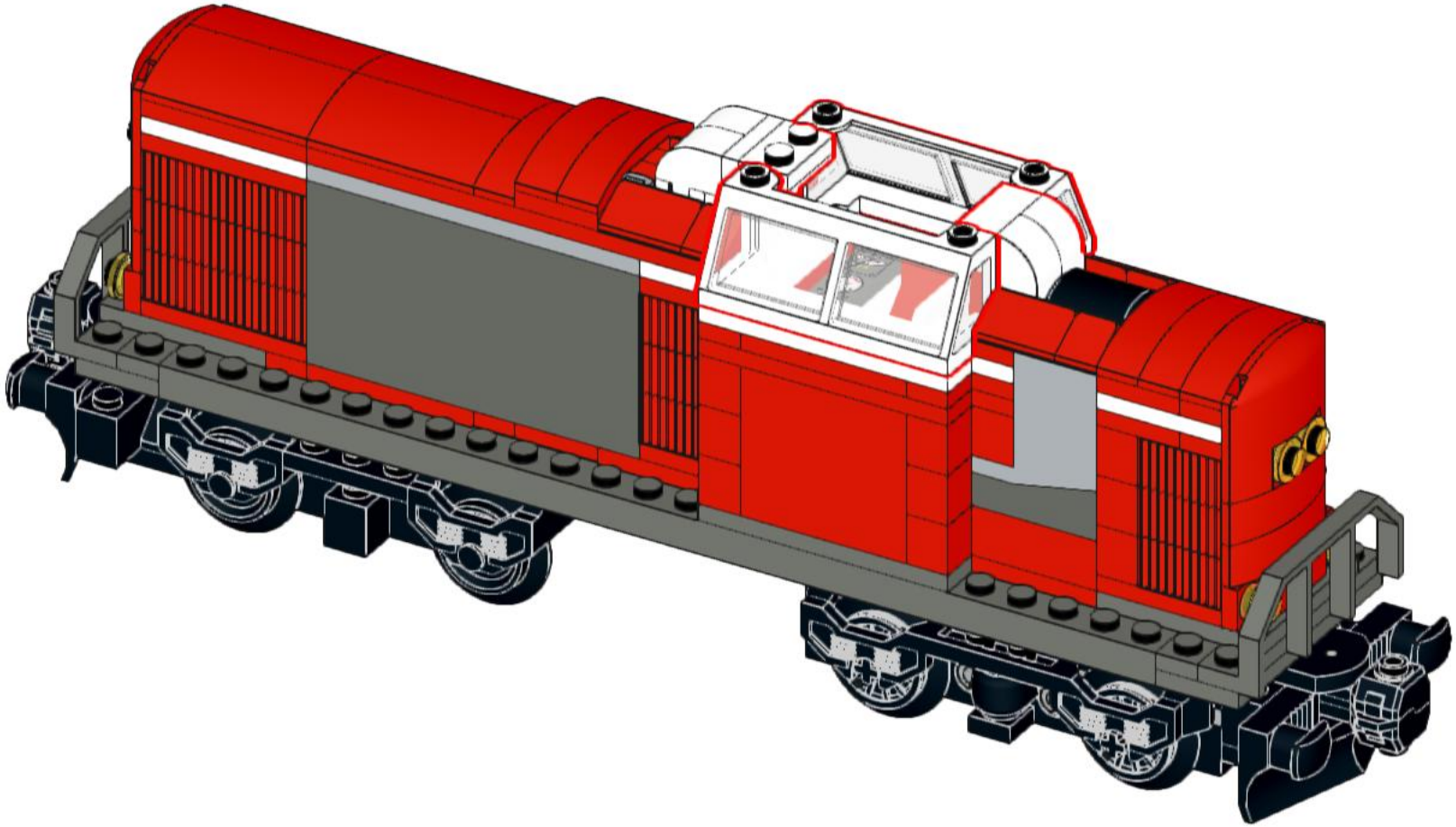

60

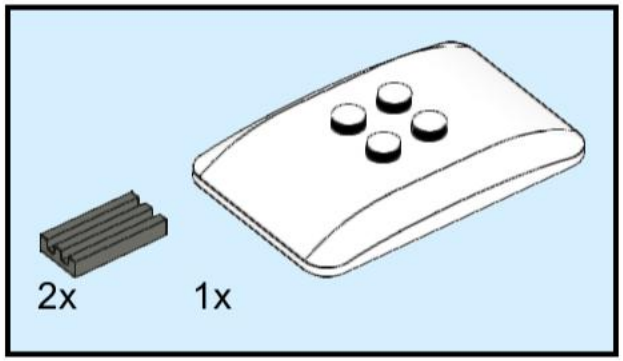

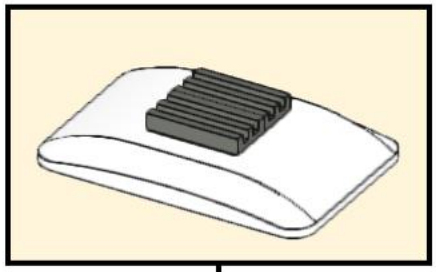

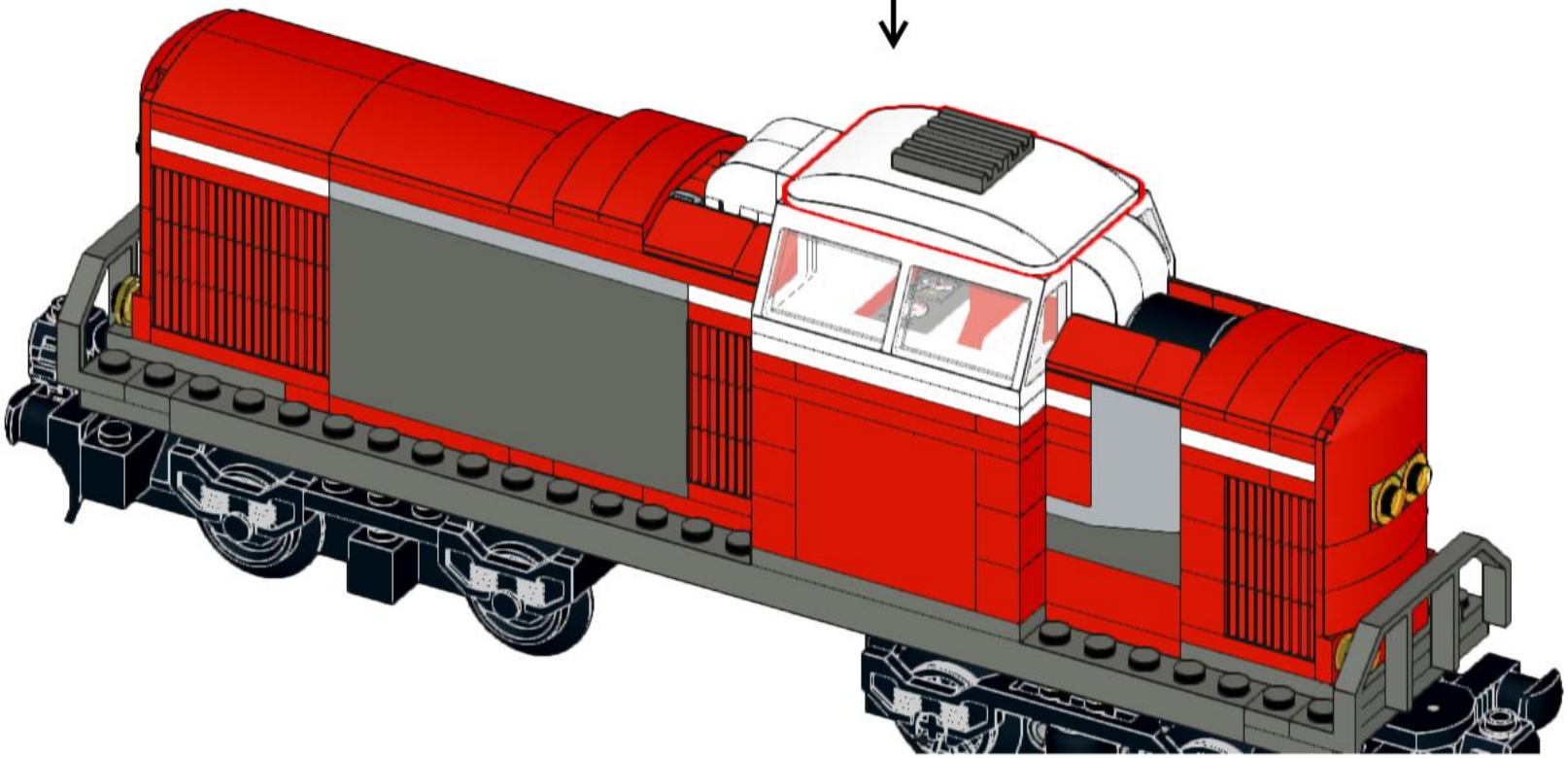

61

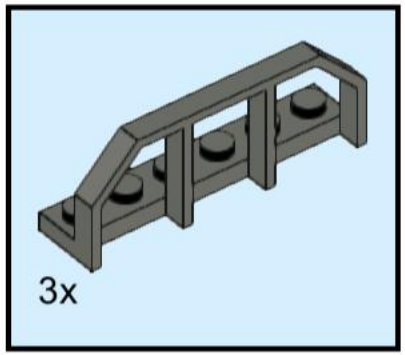

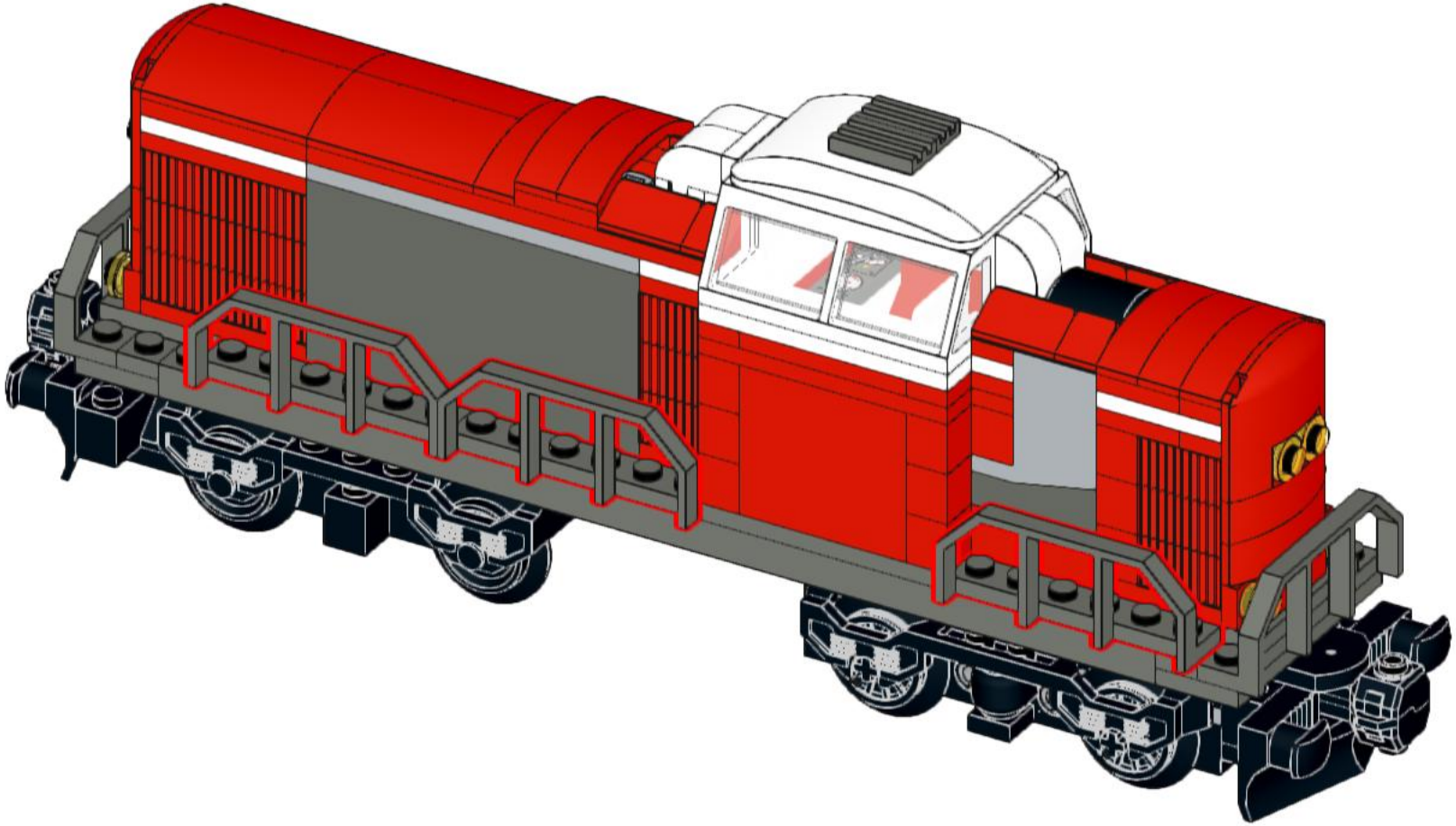

62

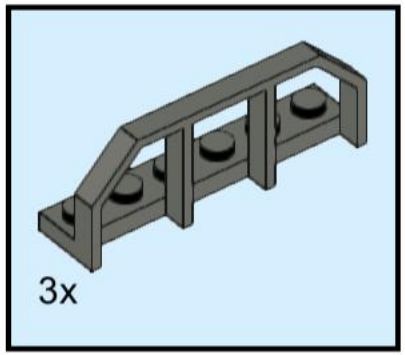

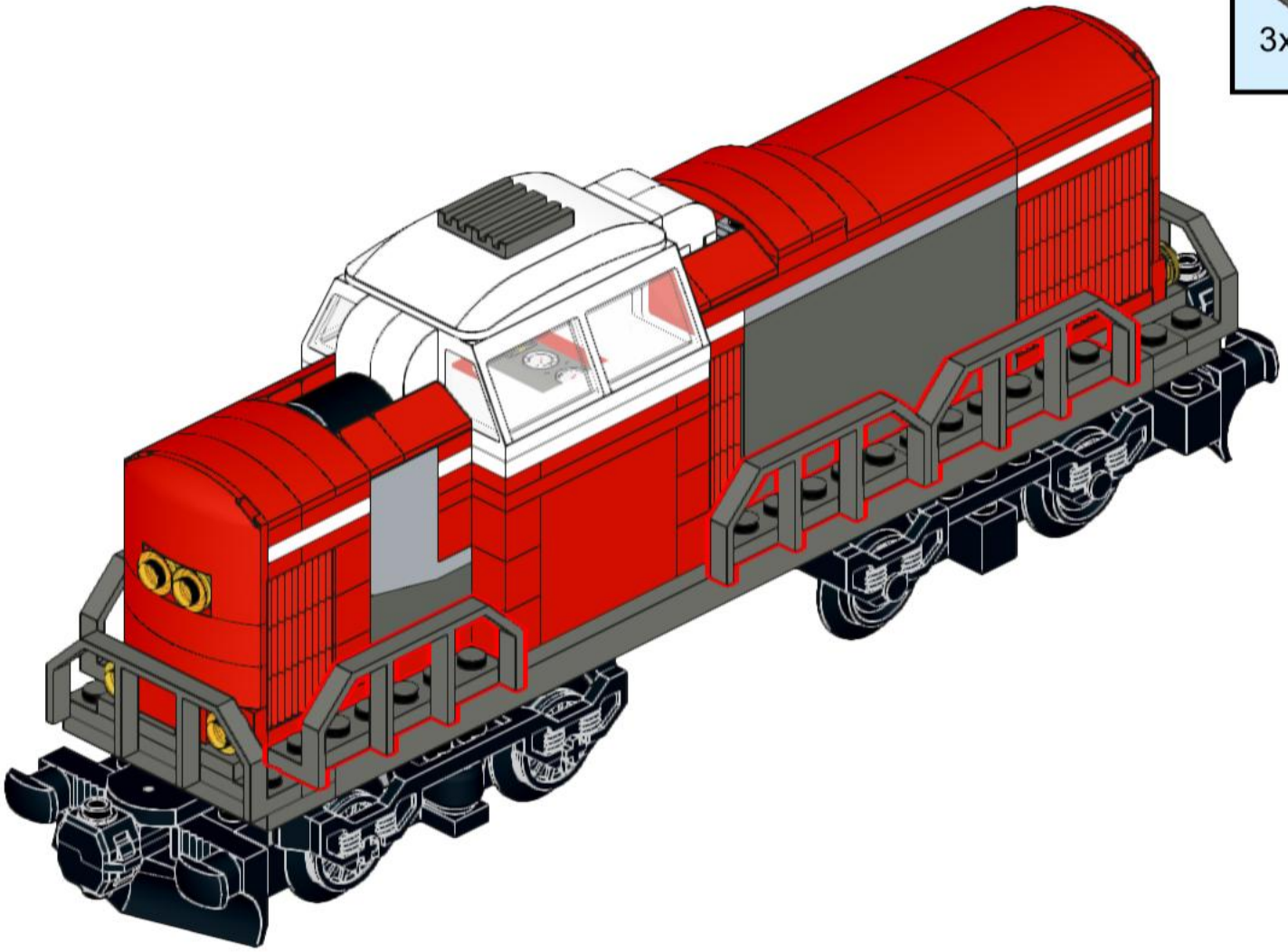

63

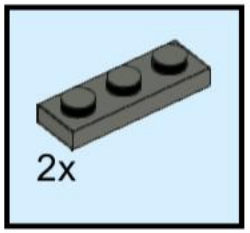

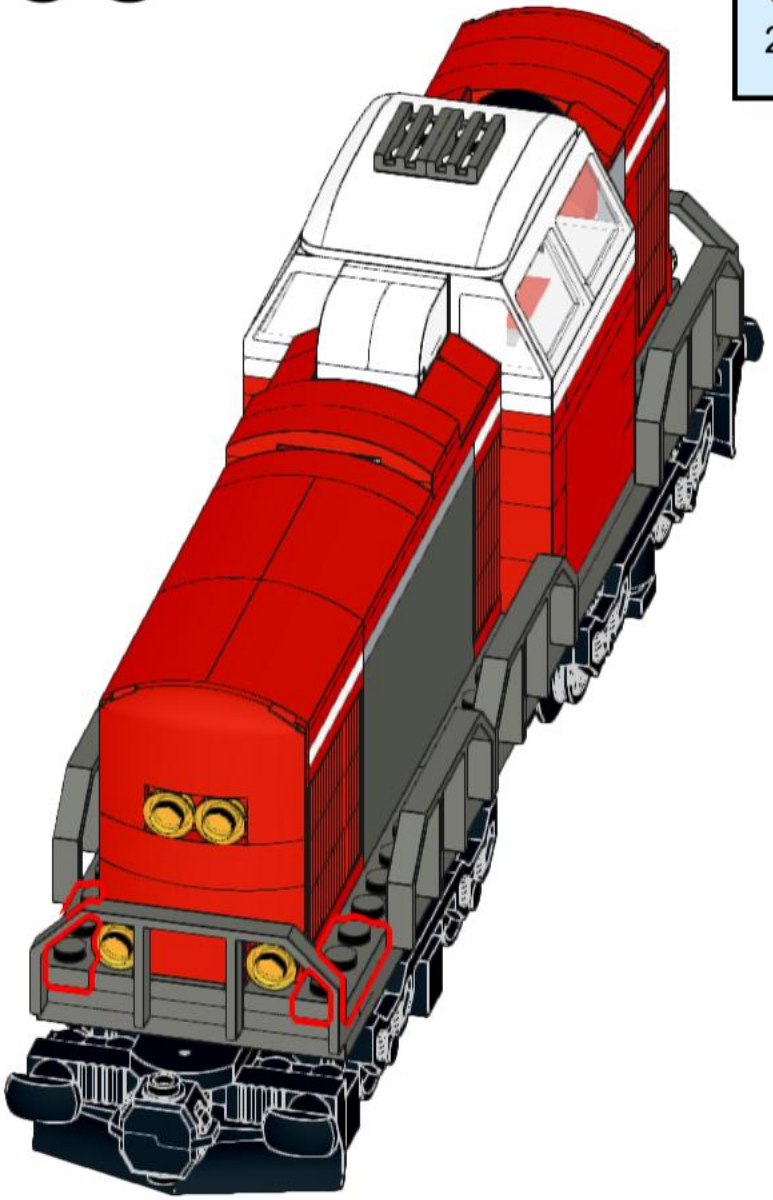

64

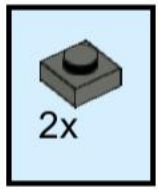

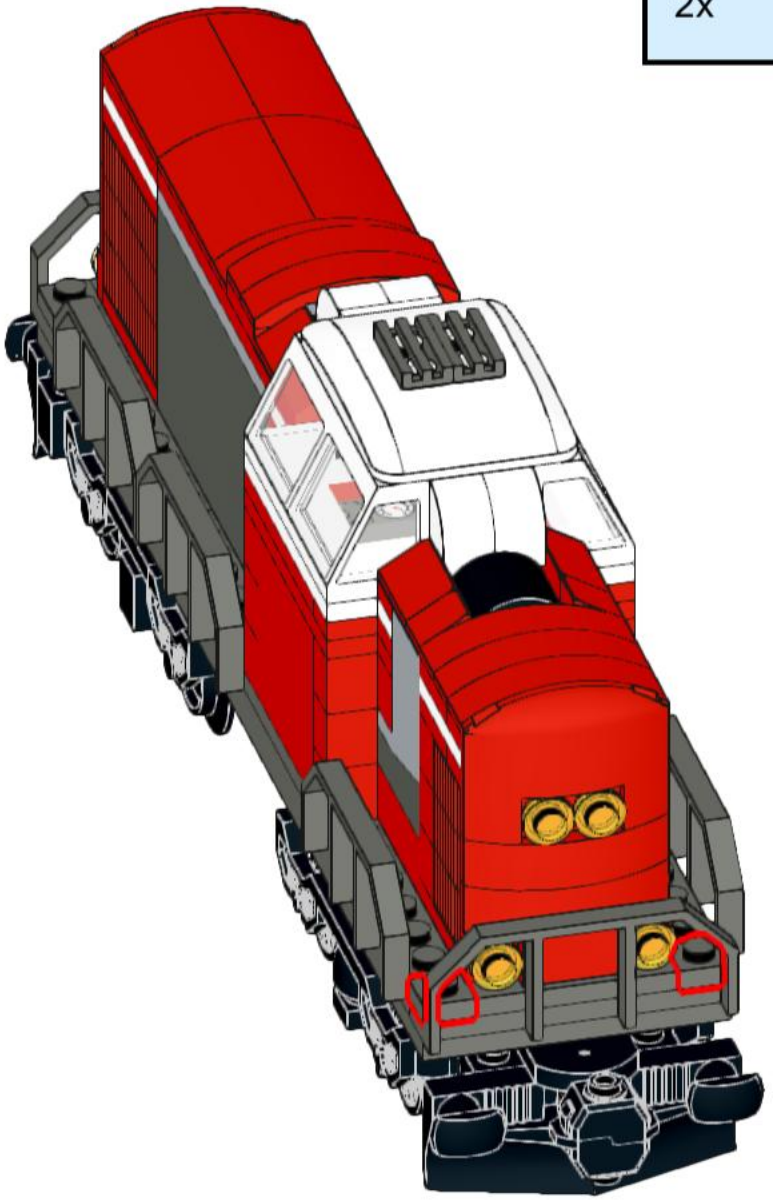

65

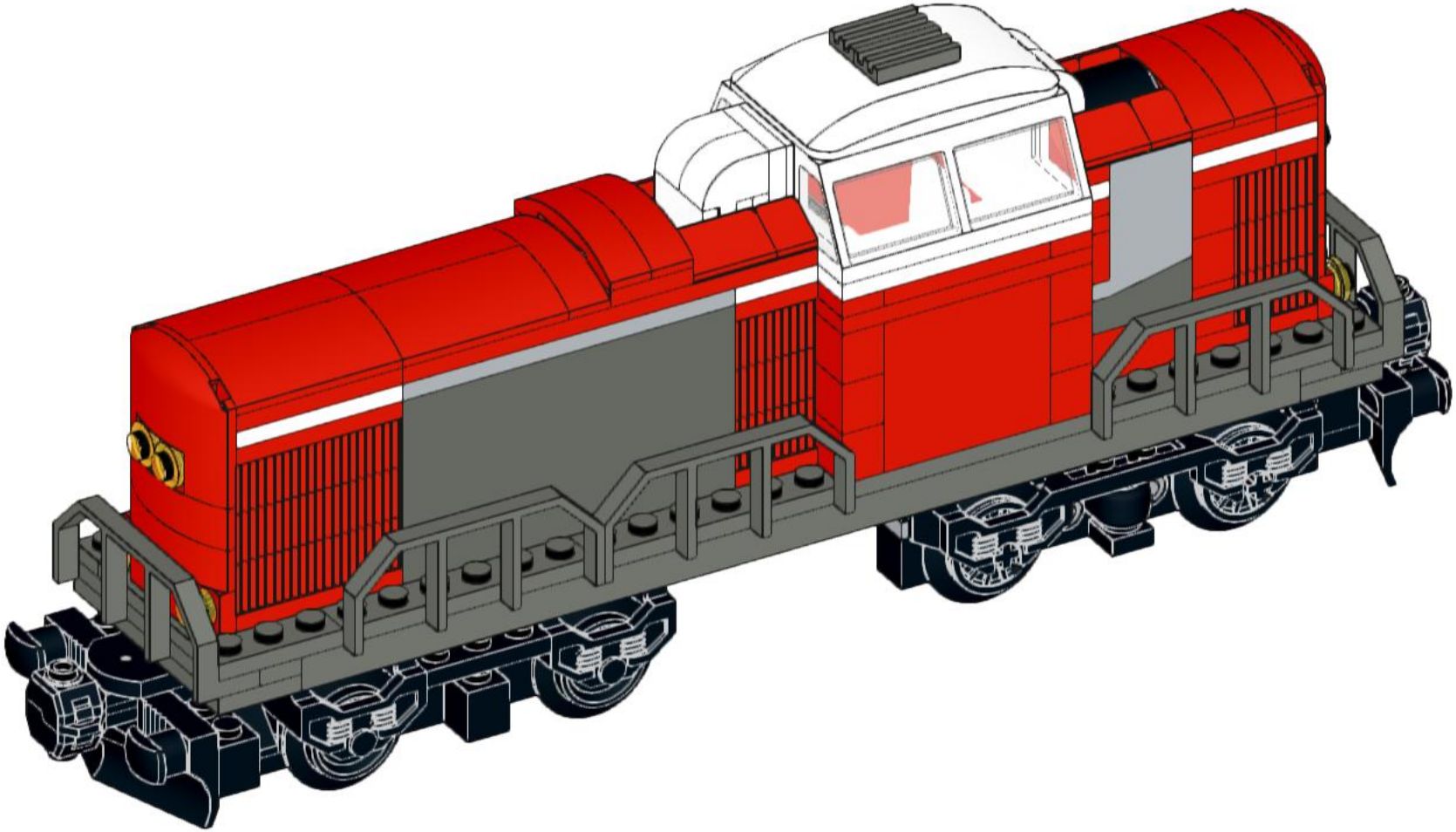

1x
3023
Black

2x
3040
Black

10x
3021
Black

3x
3710
Black

4x
55423c01
Black

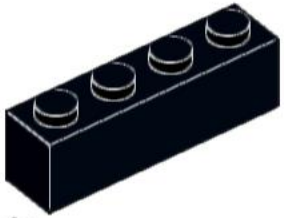

1x
3010
Black

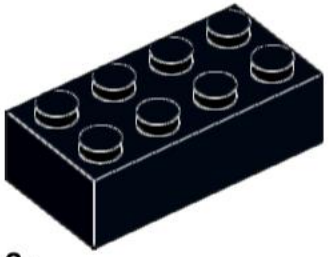

2x
3001
Black

2x
3706
Black

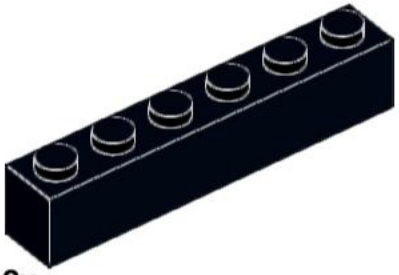

2x
3009
Black

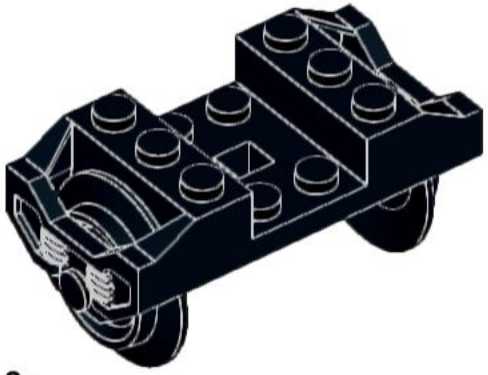

2x
2878c01
Black

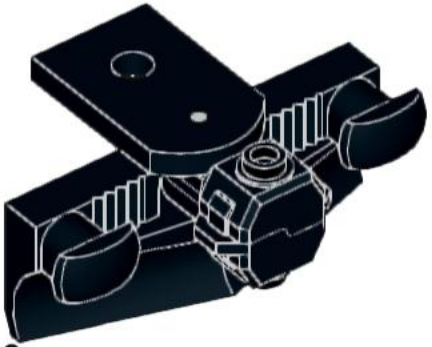

2x
64415c01
Black

2x
2730
Black

1x
3832
Black

1x
3030
Black

1x
2431px17
Dark Bluish Gray

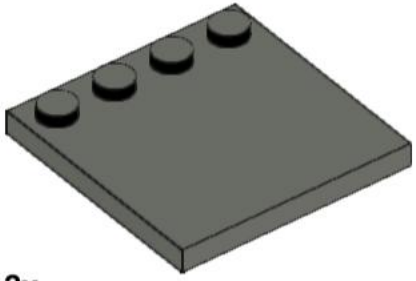

2x
6179
Dark Bluish Gray

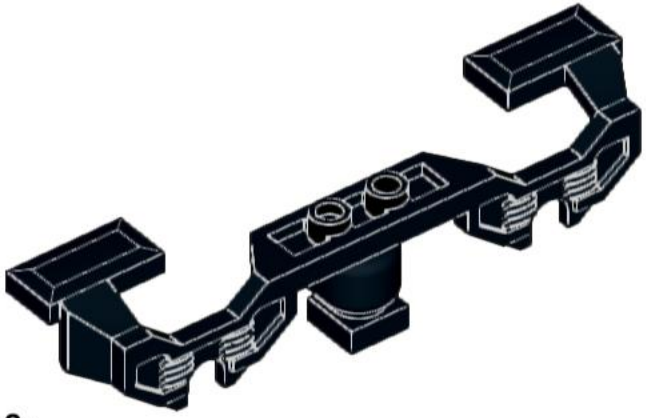

2x
2871b
Black

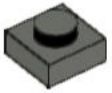

2x
3024
Dark Bluish Gray

2x
2412b
Dark Bluish Gray

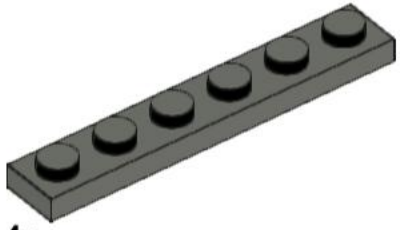

4x
3666
Dark Bluish Gray

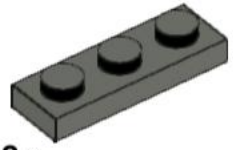

2x
3623
Dark Bluish Gray

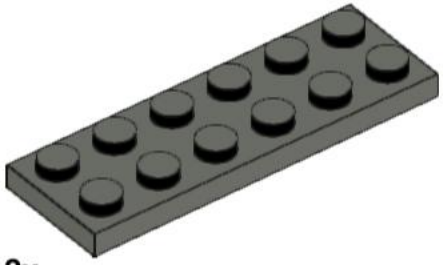

2x
3795
Dark Bluish Gray

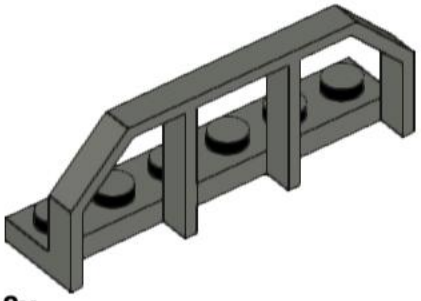

8x
6583
Dark Bluish Gray

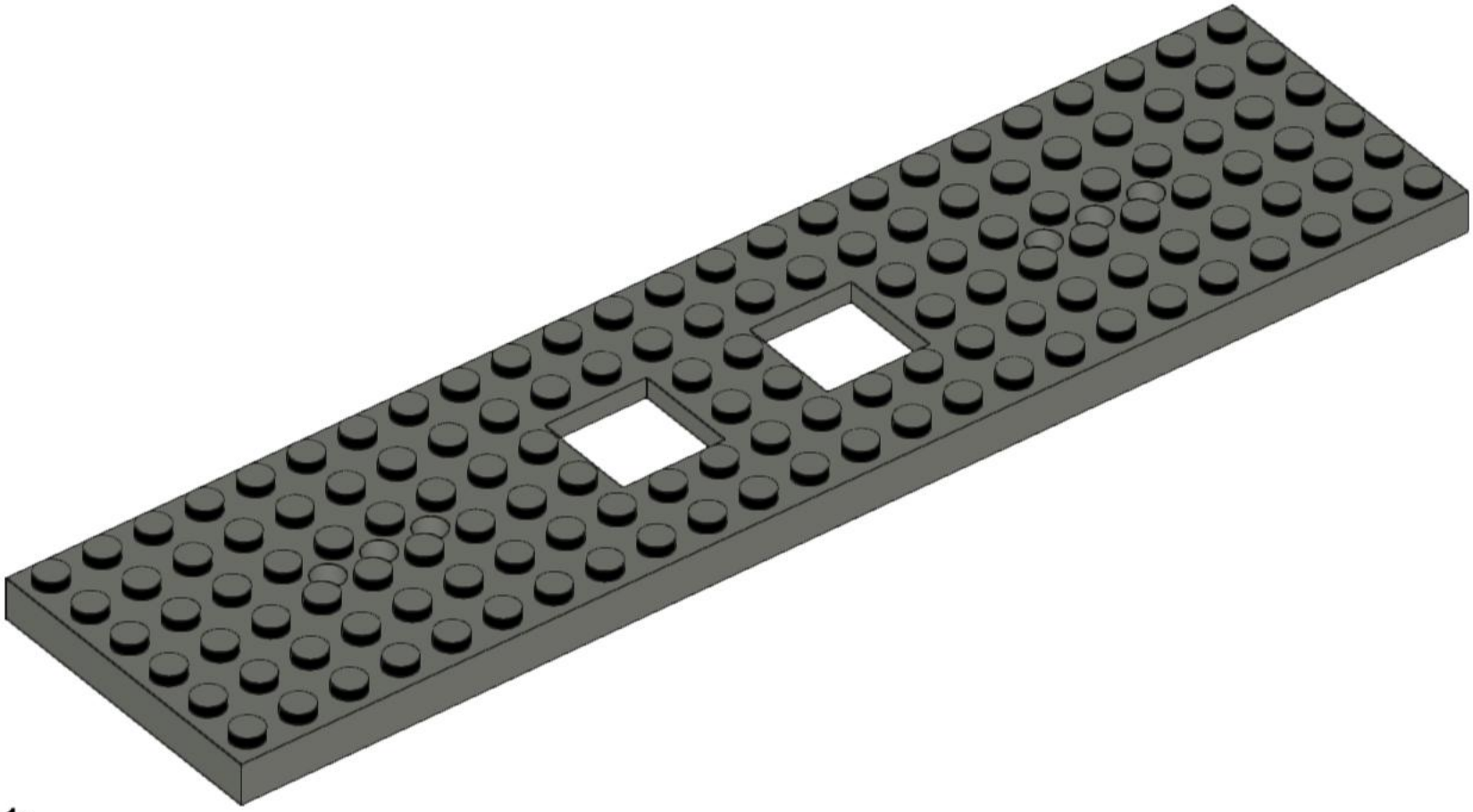

1x
92088
Dark Bluish Gray

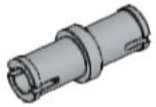

4x
3673
Light Bluish Gray

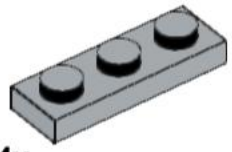

4x
3623
Light Bluish Gray

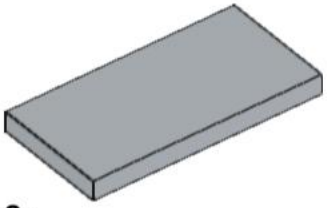

2x
87079
Light Bluish Gray

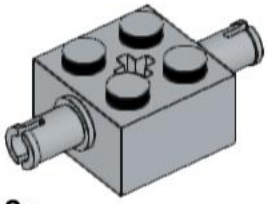

2x
30000
Light Bluish Gray

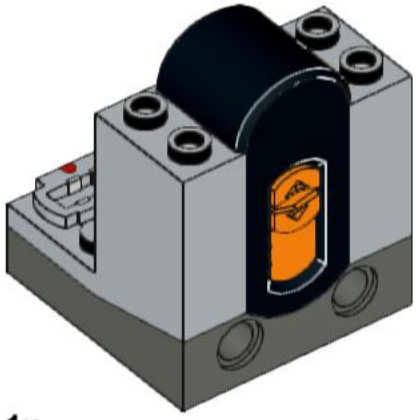

1x
58123c01
Light Bluish Gray

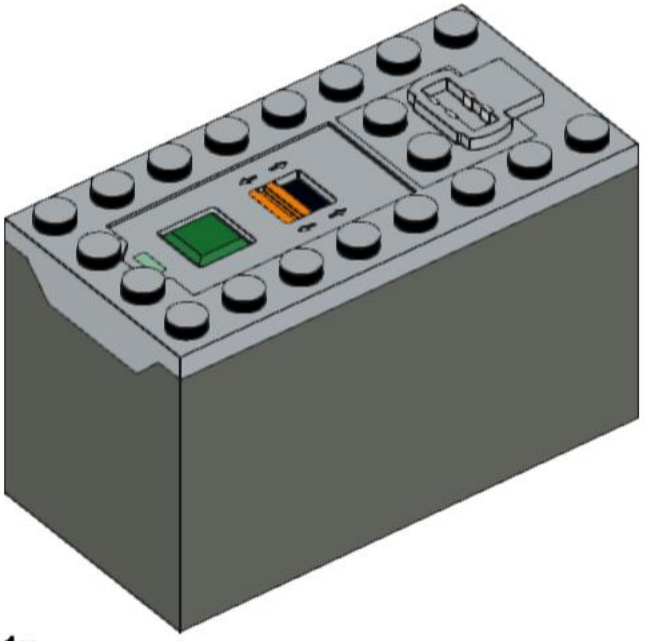

1x
87513c01
Light Bluish Gray

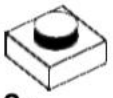

2x
3024
White

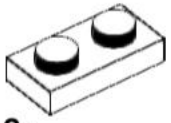

2x
3023
White

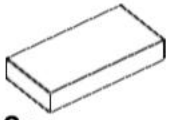

2x
3069b
White

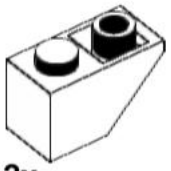

2x
3665
White

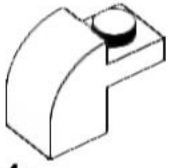

4x
6091
White

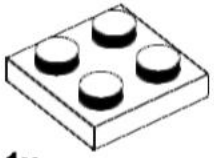

1x
3022
White

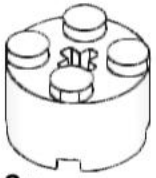

2x
3941
White

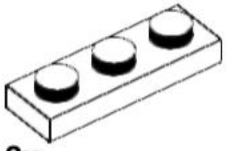

2x
3623
White

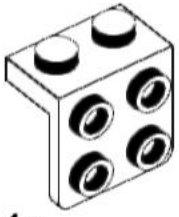

1x
44728
White

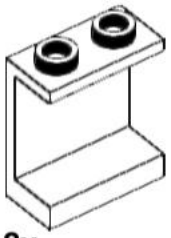

2x
4864b
White

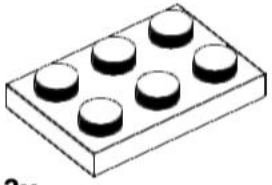

3x
3021
White

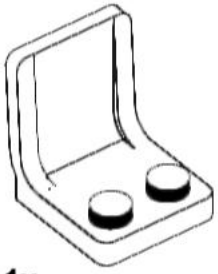

1x
4079
White

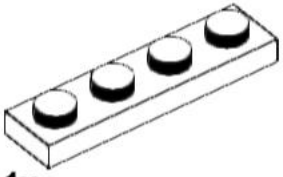

1x
3710
White

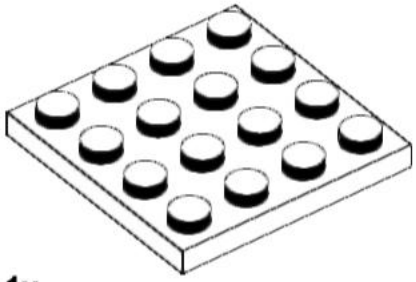

1x
3031
White

1x
98281
White

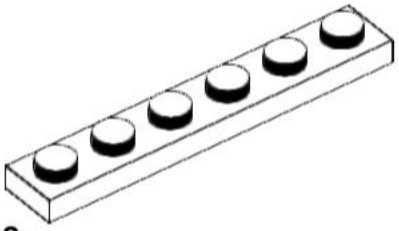

2x
3666
White

4x
54200
Red

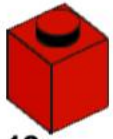

12x
3005
Red

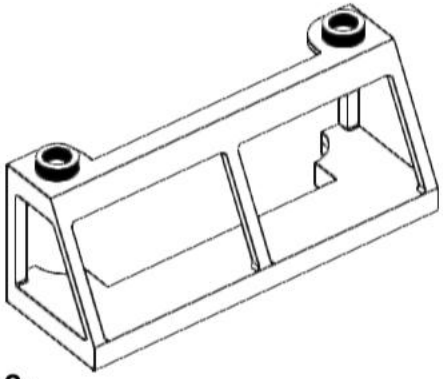

2x
13760
White

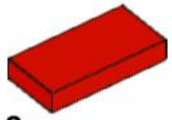

2x
3069b
Red

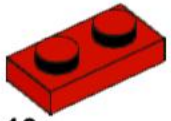

10x
3023
Red

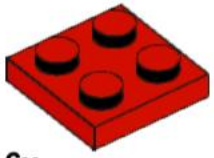

6x
3022
Red

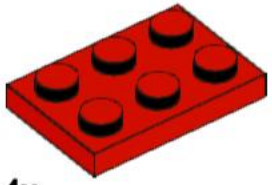

4x
3021
Red

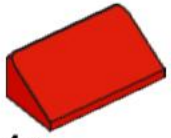

4x
85984
Red

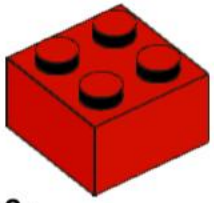

2x
3003
Red

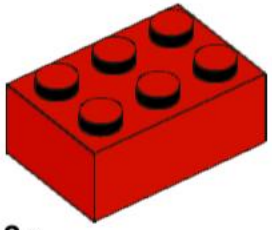

2x
3002
Red

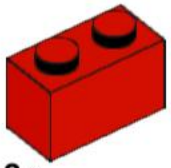

2x
3065
Red

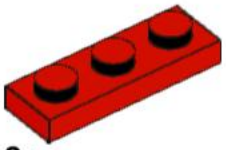

2x
3623
Red

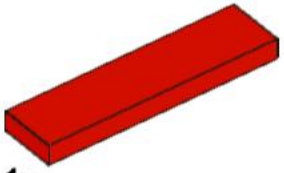

1x
2431
Red

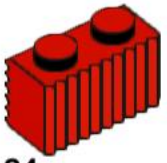

24x
2877
Red

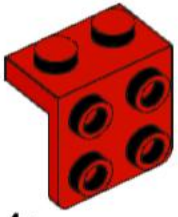

4x
44728
Red

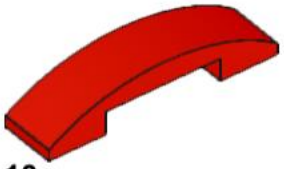

10x
93273
Red

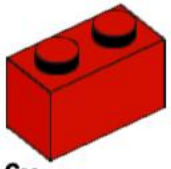

6x
3004
Red

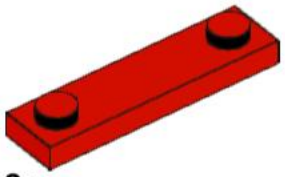

2x
92593
Red

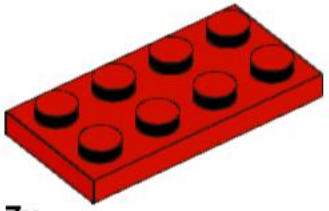

7x
3020
Red

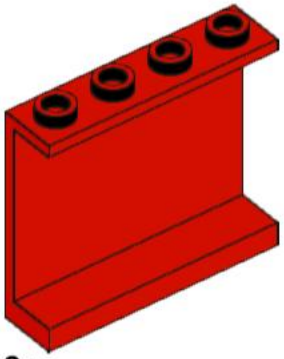

2x
4215b
Red

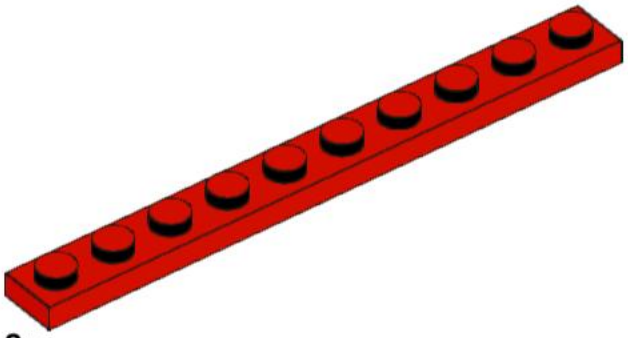

2x
4477
Red

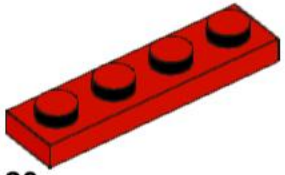

20x
3710
Red

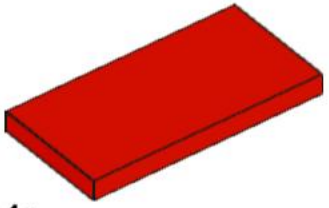

1x
87079
Red

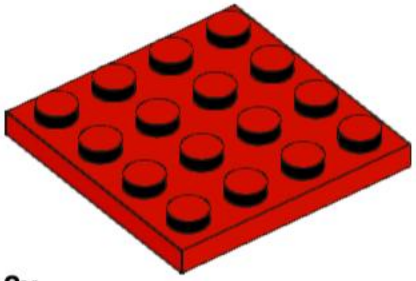

2x
3031
Red

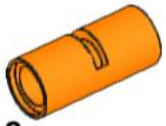

2x
62462
Orange

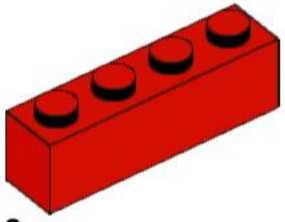

2x
3010
Red

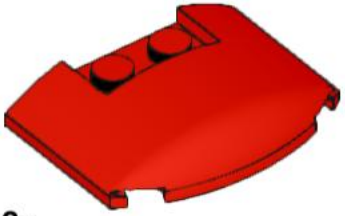

2x
93604
Red

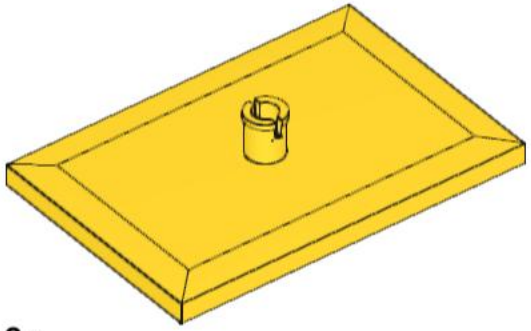

2x
4025
Yellow

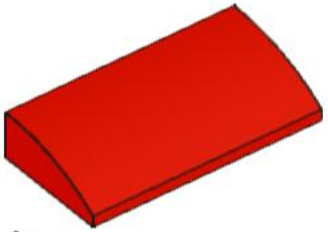

4x
88930
Red

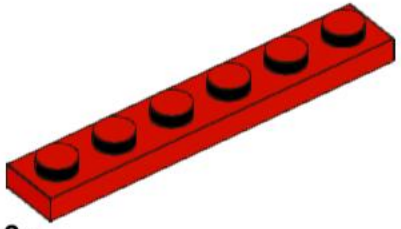

3x
3666
Red

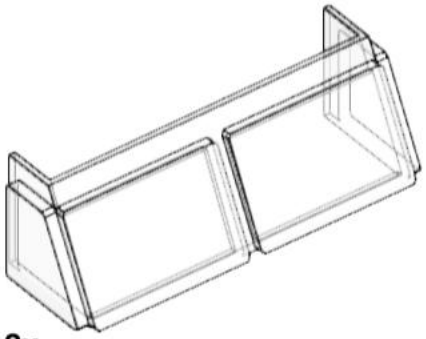

2x
13756
Trans-Clear

8x
4073
Trans-Yellow