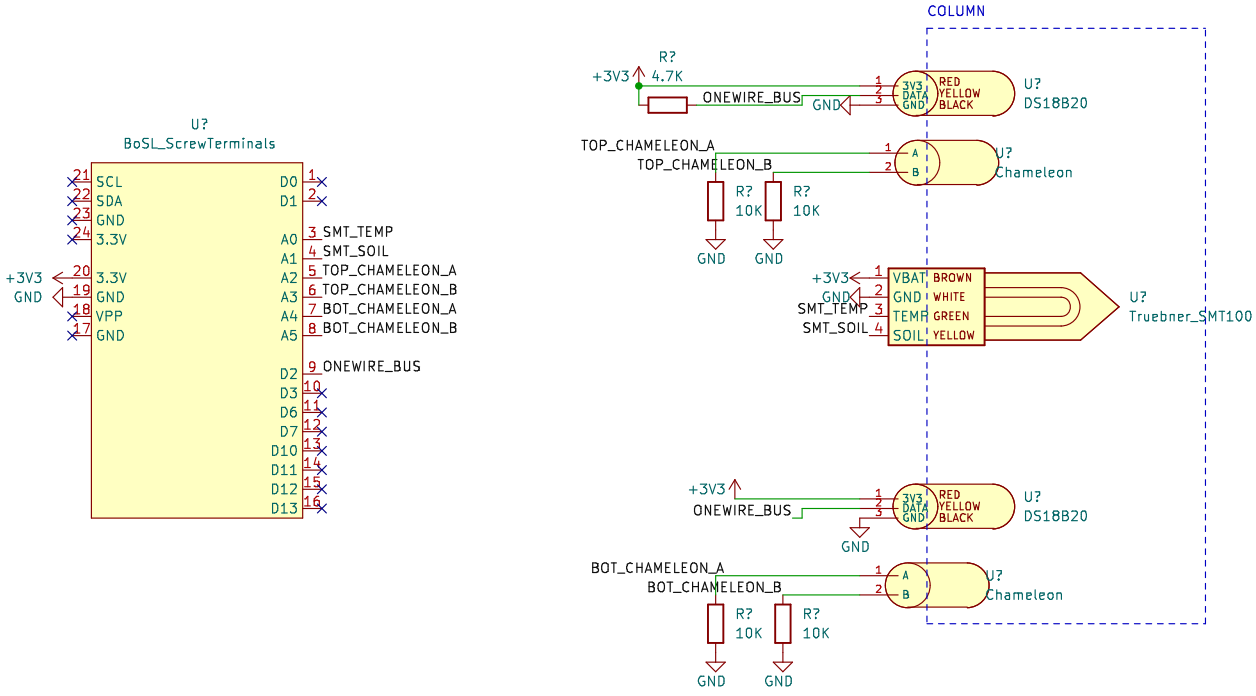
U?
BoSL_ScrewTerminals
SCL
SDA
GND
3.3V
3.3V
GND
VPP
GND
+3V3
GND
D0
D1
A0
A1
A2
A3
A4
A5
D2
D3
D6
D7
D10
D11
D12
D13
SMT_TEMP
SMT_SOIL
TOP_CHAMELEON_A
TOP_CHAMELEON_B
BOT_CHAMELEON_A
BOT_CHAMELEON_B
ONEWIRE_BUS
COLUMN
R?
4.7K
+3V3
ONEWIRE_BUS
GND
3V3
DATA
GND
RED
YELLOW
BLACK
U?
DS18B20
TOP_CHAMELEON_A
TOP_CHAMELEON_B
A
B
U?
Chameleon
R?
10K
R?
10K
GND
GND
+3V3
GND
SMT_TEMP
SMT_SOIL
VBAT
GND
TEMP
SOIL
BROWN
WHITE
GREEN
YELLOW
U?
Truebner_SMT100
+3V3
ONEWIRE_BUS
GND
U?
DS18B20
BOT_CHAMELEON_A
BOT_CHAMELEON_B
U?
Chameleon
R?
10K
R?
10K
GND
GND